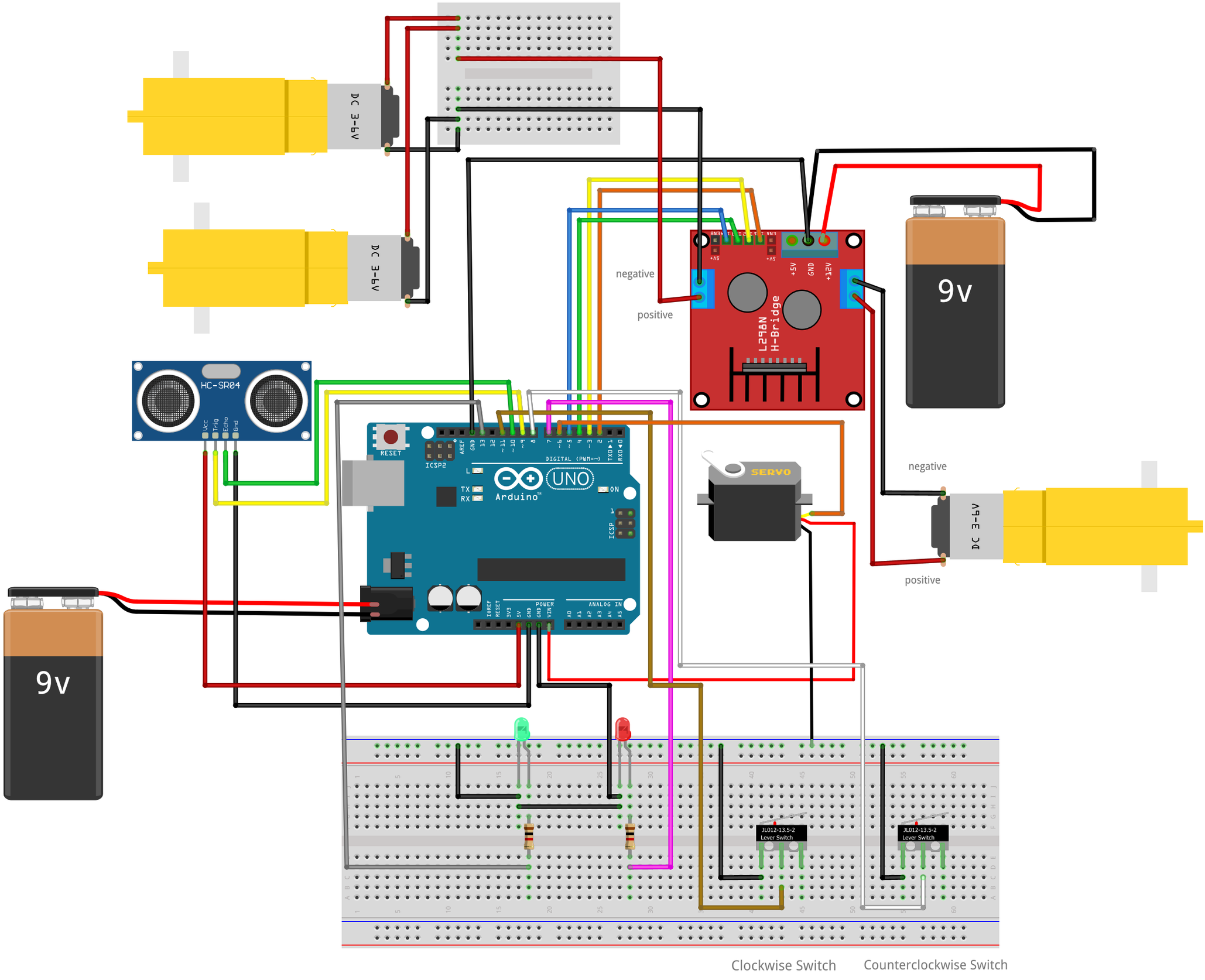
DC 3-6V
DC 3-6V
negative
positive
L298N
H-Bridge
+5V
GND
+12V
9v
HC-SR04
Vcc
Trig
Echo
Gnd
RESET
ICSP2
DIGITAL (PWM=~)
UNO
Arduino
ICSP
SERVO
negative
positive
DC 3-6V
9v
POWER
ANALOG IN
JL012-13.5-2
Lever Switch
JL012-13.5-2
Lever Switch
Clockwise Switch
Counterclockwise Switch
fritzing