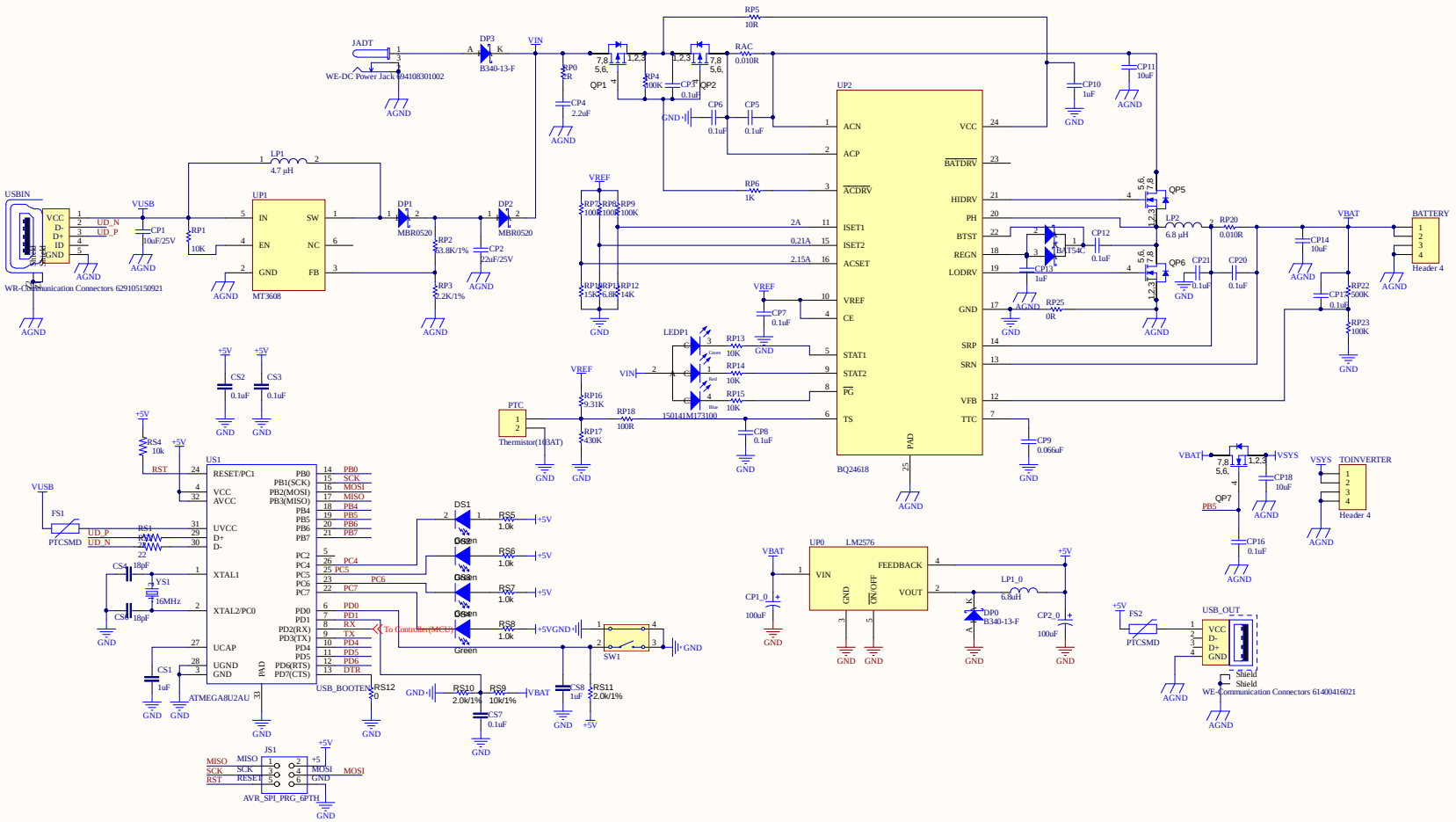

Title		
Size C	Number	Revision
Date: 3/1/2016	Sheet of	
File: G:\Work\...\BatteryPack.SchDoc	Drawn By:	

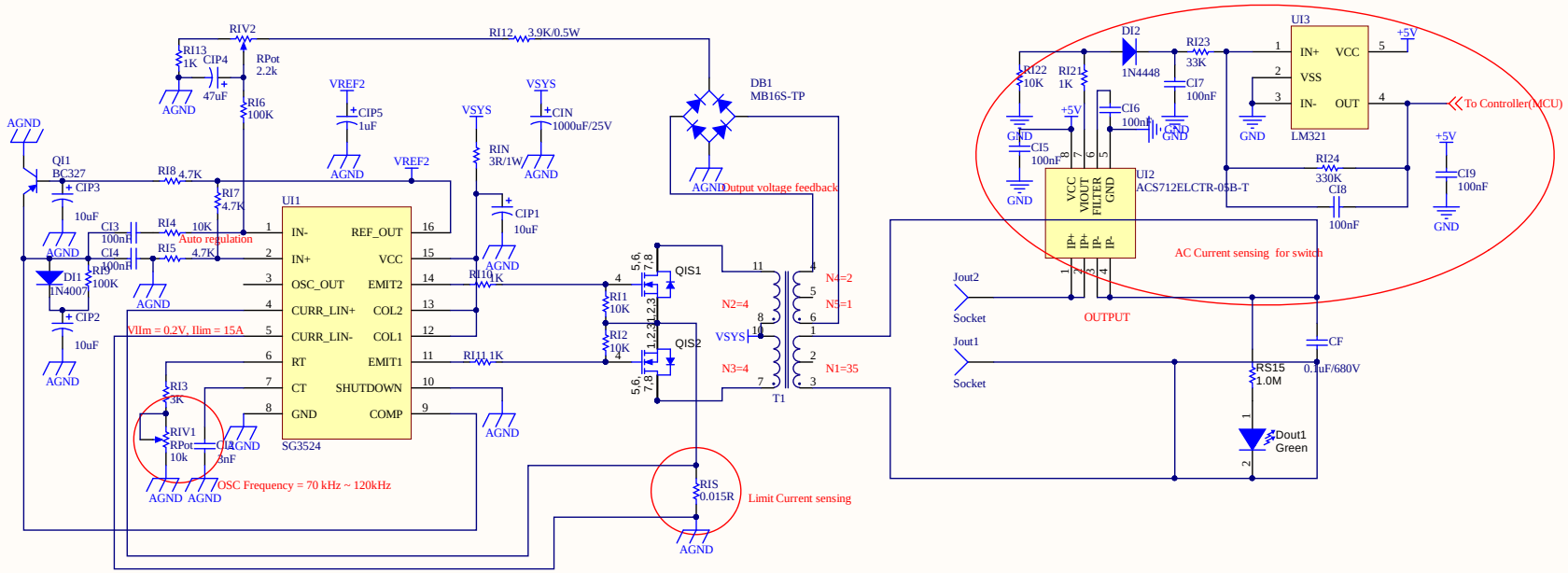

Title		
Size B	Number	Revision
Date: 3/1/2016		Sheet of
File: G:\Work\..\Inverter.SchDoc		Drawn By:

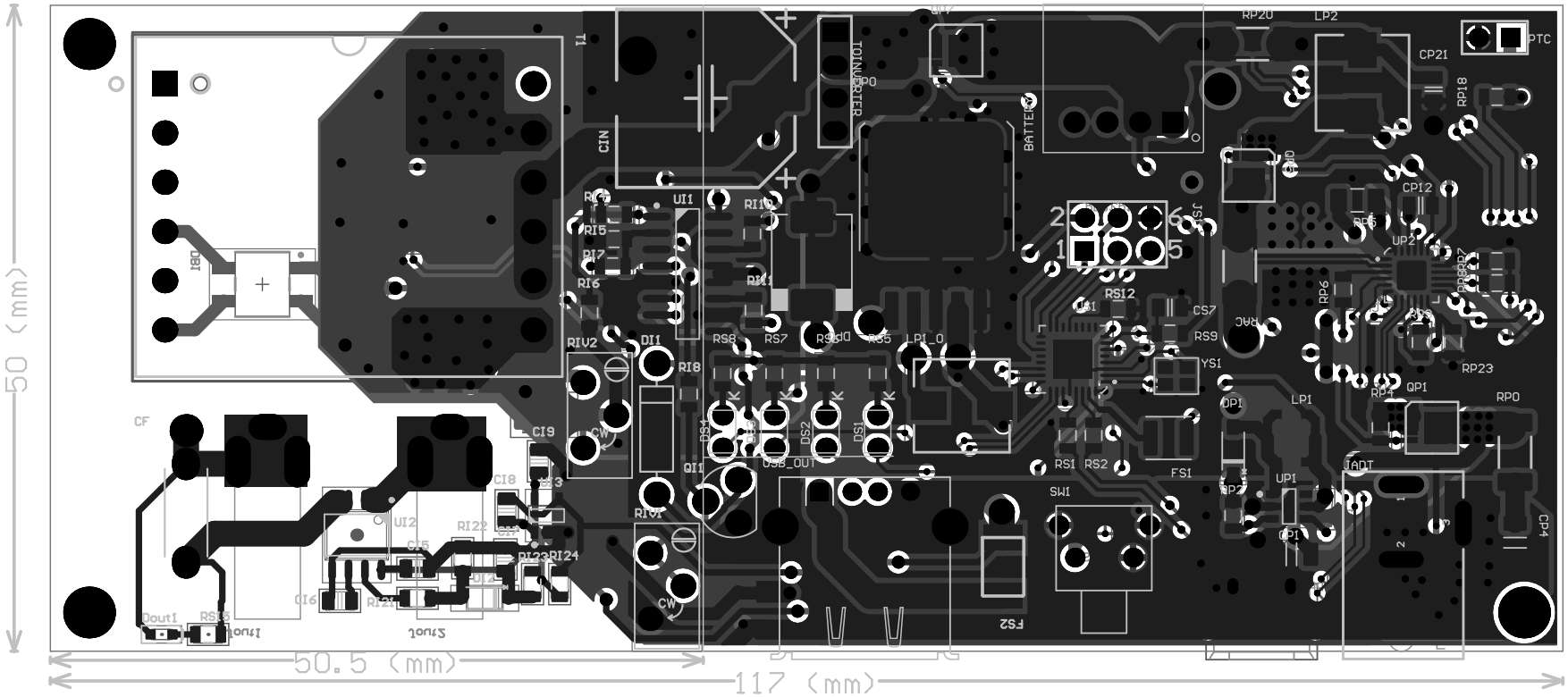
50 (mm)
50.5 (mm)
117 (mm)
CIN
T1
TOINVERTER
BATTERY
RP20
LP2
CP21
PTC
RP18
CP12
UP2
RP6
RP23
RP0
QP1
LP1
UP1
CP4
RSI2
CS7
RS9
YS1
FS1
SW1
RS1
RS2
FS2
DS1
DS2
DS3
DS4
RS4
RS5
RS7
RS8
LP1_O
USB_OUT
QI1
UI1
UI2
DI1
RI1
RI2
RI5
RI6
RI7
RI8
RI10
RI11
RI22
RI23
RI24
RIV2
CI5
CI6
CI8
CI9
CF
CW
Dout1
RS10
Iinout
Sinout