GMR Institute of Technology - Rajam

An Autonomous Institute Affiliated to JNTU-GV

GO-KARTING CHAMPIONSHIP 2023

Student TEchnical Paper & Project CONtest & Exhibition

STEPCONE 15TH EDITION

EVENT DETAILS

EVENT DATES – JAN 24-25, 2023

EVENT LOCATION – GMRIT, RAJAM

CONTACT DETAILS:

Event Faculty Coordinator

Dr. A. Lakshumu Naidu

Dr. A. Vijin Prabhu

Event Coordinators (Student):

A. Lohith Kumar - 6309882481

D. Bharath - 7013946564

G. Poorna Chandra Naidu - 7702047537

Table of Contents

1. About Organization
2. About Event
3. Event Calendar
4. General Rules & Regulations of Authority
5. Registration Requirements
6. Judgment Criteria
7. Event Requirements
8. Vehicle Requirements
9. Virtual Round (VR) & Final Round (FR).
    - Dynamic & Endurance Events
    - Brake Test
    - Skid Pad Test
    - Autocross
    - Endurance & Fuel Economy
10. Prize Distribution

DESCRIPTION:

The purpose of this event is bringing out the world level innovative and creative ideas of all young participants. Under graduate/Graduate students from different technical streams can participate in this event. The basic outline of the event consists of designing and fabricating a go-kart and then competing with these go-karts in the final event.All the participating teams will have no bars for creativity and innovation with a few restrictions mentioned in the Rule Book . The real essence of the event lies in the sheer engineering pratical application and tests in real time.

Event calendar

S NO	Activity	Date
1	Official Workshop	20th DEC 2022
2	Virtual report submission (Mail)	24th DEC 2022
3	Virtual Round (Online)	4th-5th JAN 2023
4	Results of Virtual Round	10th JAN 2023
5	Last Date of Secondary Registration Fee Payment	20th DEC 2022
6	Engine Registration	30th DEC 2022
7	Final Design Report	1st JAN 2023

8	Work status report with working photos	6th JAN 2023
9	College Level Technical Inspection	24th JAN 2023
10	Testing Video Submission	15th JAN 2023
11	Final Round	24TH JAN 2023

General Rules and Regulations of Authority

There are several rules and restrictions, which are to be followed by each and every team. **Go Kart Racing Event** reserves right to modify each and every rule associated with the event. Violation of rules by anyone of the participating member may be liable to be penalized severely, inclusive of and up to debarring of the team from the competition at any stage or withdrawal of award/awards, as well.

Validity of the Rules:

The rules will be same throughout the event and any amendments will immediately be made known to all the participating teams through emails and the same will be uploaded on the website.

Rule Compliance:

By registering for this event, the team, members of the team as individuals, faculty advisors and other personnel of the college and university agree to comply with, and be bound by, these rules and all rule interpretations or procedures issued or announced by GKC-2023. All team members, faculty advisors and other university representatives are required to cooperate with, and follow all instructions from competition organizers, officials and judges.

All the technical queries will only be answered through proper mailing channel. None of the technical queries will be entertained on telephones.

None of the queries regarding the event will be entertained after 15 days from the end of the event.

It is Captain's responsibility to get signed on the score sheet after every dynamic event by the judges/ technical inspectors on the same day itself.

Captain only has the right to raise a query related to any issues throughout the Season.

If you have any query during the final event team captain should submit the query in letter format.

Judgment given by the Judges/ Technical Inspectors is final. If you have any issue with the judgment team captain should write a mail to us. Arguments with the Judges/ Technical Inspectors are not encouraged violating which will pose legal actions on the team on spot.

There will be deduction of TDS from the Prize money at the time of issuance of Prize money.

Behaviour-

Unsportsmanlike Conduct- In the event of unsportsmanlike conduct, the team will receive a warning from an official. A second violation will result in expulsion of the team from the competition. Failure of a team member to follow an instruction or command directed specifically to that team or team member would result in a twenty-five (25)-point penalty.

Arguments with Officials- Argument with, or disobedience to, any official may result in the team being eliminated from the competition. All members of the team may be immediately escorted from the grounds.

Smoking and Illegal Material- Alcohol, illegal drugs, weapons or other illegal material are prohibited on the event site during the competition. This rule will be in effect during the entire competition. Any violation of this rule by a team member will cause the expulsion of the entire team. This applies to both team members and faculty advisors. Any use of drugs, or the use of alcohol by an individual, will be reported to the local authorities for prosecution.

Vehicle Movement- Vehicles may not move under their own power anywhere but on the practice or competition tracks. Off track vehicles must be pushed at a normal walking pace by means of Push Bar/members pushing the vehicle, with all four (4) wheels on the ground, a team member sitting in the cockpit to steer and brake and with another team member walking beside the car. During performance events when the excitement is high,

it is particularly important that the car be moved at a slow pace in the pits. Violation of this rule will result directly into the 25 points penalty.

List of Prefabricated Parts- Brake drum, disc, calliper and master cylinder, Wheel rims & Tires, steering wheel, Engine & exhaust system.

Penalties against Misbehaviour

- All the teams have permission to buy the readymade/fabricated parts but use of these parts in excess may lead to the disqualification of the vehicle or penalty of 200 points.
- Violation of rules- 100 points/ disqualification.
- Misbehaviour/arguments with officials or volunteers-100 points/ disqualification.
- Tampering with TI sticker or making restricted changes in vehicle after TI –100 points/disqualification.
- Entry without permission on track- 100 points/ disqualification.

- Reporting late at the Event- 100 points/ disqualification.
- Did not attend Captains meet- 100 points/ disqualification.
- Intentional damage of track/tent/other properties will result to the penalty of Rs 5000/- or more on the team also prize and certificates will not be awarded to the particular team/team member.
- The track will open sharp at 08:30hrs. The schedule given in the table is to be strictly followed by all the teams. No participants will be allowed to stay on the track after 17:30hrs, no matter what they are doing. Any team member found inside the track premises after the stipulated time mentioned above would be penalized 100-points or disqualified from the event
- Final Event schedule will be intimated 10 - 15 days before the commencement of the event.

Registration Requirements

Team Requirement:

- Team shall consist of minimum of 10 members and maximum 12 members in a team.
- The team registering for Students Kart Design Challenge must have a Team Name, Team Logo, Team Mail, Team Captain, Manager and the Faculty Coordinator.

- **Team Name and Team Logo**: Every team must have a unique team name and an impressive team logo. All the team members must be from Diploma/B.Tech/B.E.

Note- Members of the team must be of the age 17-23. Members above the specified age are not entertained.

- **Team Mail ID**:

Every team is required to create a team email id to communicate or query to GKC-2023.

All the communications between organizing team of GKC-2023 and the participating team will be held through team mail ID.

Communication through any other Email ID will not be entertained.

- **Team captain**: Every team must have a team captain who is the representative of the team.

- **Team manager**: Every team must have a team manager who is responsible for communicating between different departments in the team.

- **Faculty Advisor**: Every team should have At least 1 to a maximum of 3 faculty advisors from respective college/university.

- **Drivers-** Each team should have 2 drivers.

Team Registration- You can register for GKC-2023 here at LINK

Registered teams can contact our event coordinators for any queries or you can mail us at gkc.2023@gmail.com

- Following is the non-refundable registration amount Rs.12,000
- First Phase: 50% of total registration amount. (i.e., total participants X 50% Amount per participant)
- Second Phase: 50% of total registration amount. (i.e., total participants X Remaining 50% Amount per participant)
- For Extra member registration, fee is Rs.1400 per participant.

Extra Member: The member who register for the event from a team after completion of first phase of registration process.

Mode of Payment-

- The Payment link will be provided after registering into STEPCONE 2023 page.

NOTE: Payment has to be done within 7 days from date of registration [In case of payment failure within the due dates, online registration will be cancelled].

Registration Agreement- By registering in GKC-2023 the Team Captain/Team Member/Faculty Advisor/College Management agrees with the rules and regulations of GKC-2023. They understand that all the information provided in the registration documents and online registration forms are correct to the best of their knowledge, also

they accept that the team would undertake all the activities without the help of a professional directly or indirectly. In case of any violation of the rules and regulations specified in this Rule Book, the teams are liable for disciplinary actions as per the decision of the GKC-2023 Management. The teams are also liable for any loss of documentation/communication on part of discrepancy in the information as provided in registration.

Official Announcements-All the official announcements and the information regarding the competition will be displayed on the website www.gmrit.org/stepcone

Judgment Criteria The participating teams will be judged in two rounds. The first one is Virtual round and the other is Final Round Virtual round is the stage in which the documents like Vehicle Design, Design Report, FMEA, DVP and the Cost Report, Innovation reports are to be evaluated by the judges from various organizations.

Virtual Round- In Virtual round the following documents will be evaluated by the judges and the judgment will be given based on team performance. There will be no ranking in Virtual Round but qualification in Virtual Round is mandatory to proceed further in the event.

S.No	Category
1.	Design Report
2.	Innovation
3.	Cost Report
4.	Entrepreneurship/Start-up plan
5.	DVP
6.	Gantt chart
7.	FMEA

In FR (Final Round) the selected teams will be coming on the event site with the vehicle fabricated by them and will have to undergo a set of tests and will be awarded the points accordingly. “Technical Inspection” and “Brake Test” are two tests for which no team will get points. But passing these both tests is essential, no teams will be allowed to perform further in any of the dynamic events without passing in these tests.

S.No	Category	Maximum Points
1.	Technical Inspection	NA
2.	Disassembly Assembly	70
3.	Brake Test	NA
4.	Design Evaluation	100
5.	Manufacturing Level	50
6.	Entrepreneurship/Start-up Plan	100
7.	Speed Snap	70
8.	Skid Pad	80
9.	Autocross	80
10.	Endurance & Fuel Economy	200+50
Total	800	

Event Requirements

Driver's Requirements- Both the drivers representing a team must possess a valid **4-wheeler Driver's license** issued by State Transport Authorities in India, Learners driving license will not be entertained. Drivers have to carry their original driving license during the final event.

Medical Insurance with Full Accidental Cover- Each team must have two drivers and both the drivers must possess a valid medical insurance with full accidental cover, which must be presented on the event site when asked by the officials.

Drivers Safety Gear- The following are the minimum requirements and restrictions that will be enforced through technical inspection, at any stage of competition. Noncompliance if any observed by the inspection/organizing/judging committee members must be corrected and no vehicles without passing the technical inspection would be allowed to participate further in the event. All the parts of Driver's Safety Gear must meet the required rating (specified). No driver would be allowed to drive the vehicle without the complete driver's safety gear in any of the dynamic event. The complete driver's safety gear of GKC-2023 will consist of the following items:

Driver's Suit- A fire resistant one-piece suit, made from a minimum of 1 layer that covers the body from the neck down to the ankles and the wrists. The minimum acceptable certification required - SFI 3-2A/1 (equivalent or higher)

Underclothing- It is strongly recommended that all drivers wear fire resistant underclothing (long pants and long sleeve t-shirt) under their approved driving suit. This fire resistant underclothing should be made from an acceptable fire resistant material and should cover the driver's body completely from neck down to ankles and also the wrists.

If you do not wear fire resistant underclothing, it is strongly recommended that you wear cotton underclothing.

Helmet- A well-fitting closed face helmet that meets one of the following certifications and is labeled as such

- DOT
- Snell K2000, K2005, K2010, M2000, M2005, M2010, SA2000 or equivalent
- SFI 31.2A, SFI 31.1/2005
- FIA 8860-2004, FIA 8860-2010

Open-faced and motocross helmets are not allowed. All helmets to be used in the competition must be presented during Technical Inspection where approved helmets will be stickered.

Balaclava- A balaclava which covers the driver's head, hair and neck, made from an acceptable fire resistant material as or a full helmet skirt of acceptable fire resistant material. The balaclava requirement applies to drivers of either gender, with any hair length.

Neck Support- The neck support must be a full circle (360°) and SFI rated. Horseshoe collars are not allowed. Simpson, RCI, G-Force, Deist or Leaf Racing Products supply neck collars that meet this requirement.

Gloves- Leather gloves with extra foam are acceptable .

Shoes- Fire resistant shoes made from acceptable fire resistant material shoes must be certified to the standard and labelled

Note: Sport shoes/Canvas shoes/Leather shoes/Industrial safety shoes are not allowed at any point of the event

Socks- Fire resistant socks made from acceptable fire resistant material, which covers the bare skin between the driver's suit and the boots or shoes.

Note: 100% cotton socks are acceptable. as such: SFI 3.3, FIA 8856-2000, OMP.

Vehicle Requirements

1) Chassis Design Requirements- The vehicle must have four (4) wheels that cannot be in a straight line in longitudinal direction. Holes in chassis are not permitted. The vehicle must have a minimum wheelbase of 965.2mm (38 inch). The wheelbase is measured from the centre of contact on ground of the front to rear tires with the wheels pointed straight ahead. The mountings and designing of chassis should be such that there should be minimum 1.5-inch clearance between the driver and any component of the vehicle in static and dynamic condition – hands, torso, thighs etc.

2) Material- The tube/rectangular pipe used in the fabrication of the chassis or the other frames/supports must be seamless. Seamed materials are strictly prohibited. Minimum cross section must be 1 inch (25.4mm), for pipe it will be OD and for rectangular section or square section it will be its minimum height.

Note: No part may project beyond the quadrilateral formed by the front fairing, rear bumper/rear fairing (if any).

Material certification- is essentially required to be produced during the technical inspection. Material should be certified from any of the material testing laboratories for its chemical and mechanical properties, the same report should be presented at the time of technical inspection.

Note: Every team should submit sample piece of chassis material which must be presented during the technical inspection. The sample tube must be welded at 90^{0} to each other. The length of the tube must be at least 20 cm on each side.

3) Wheelbase and Track Width- The wheelbase of the vehicle should posses minimum of 38 inches and maximum of 48 inches and the smaller track width (front or rear) must be not less than 75% of the wheelbase of the vehicle.

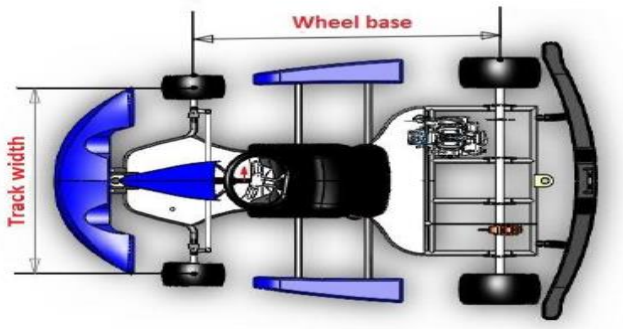

Note: The longitudinal centre line of the kart must be marked on the front fairing and rear bumper.

4) Overall Length ,Width and Height: The overall length of the kart should not be more than 80 inches including front and rear body works. The overall width of the kart should not be more than 60 inches. The overall height of the kart should not exceed 42 inches from ground, it includes fuel tank , firewall and height of the driver while sitting in proper driving position.

5) Wheels and Tyres- Teams are free to use any type of the tyres compatible to their setup meeting the necessary requirements of the rules and regulations. Justification about

selecting particular rims and tyres should be provided at the time of Virtual and Technical Inspection. The simultaneous use of tyres of different types (slick or wet weather) prohibited.

6) Ground Clearance- With the driver aboard there must be a minimum of 1 inch and a maximum of 3 inch in Static. Ground clearance measured from the lowest point (except tyres) of the vehicle, under the complete vehicle. No compensation (like chain sprocket, brake disc, chain guard) in ground clearance would be entertained.

7) Vehicle's Powerhouse

Teams are free to use any engine meeting the following requirements –

Engine Usage- One engine can only be used for one year.

Engine Type- Single Cylinder, Four Stroke, Air-cooled,

Type of Fuel - Petrol/Gasoline

Maximum Capacity - 150cc,

Maximum power -13bhp

NOTE:

1. Lawn mower engines are strictly prohibited.

2. Energy boosting devices/hybrid systems are strictly prohibited.

3. Installation of Engine should be such a way that it should not come out of the chassis. Exhaust system is excluded.

Note: No part may project beyond the quadrilateral formed by the front fairing, rear bumper/rear fairing (if any).

Electric Start- Every kart must be electric start.

Engine Registration- Immediately after the VR results, GKC-2023 will start the engine registration. The details of engine must be sent to the GKC-2023 (instructions will be provided at that time only).

8) Steering System- The steering system must be able to control front wheels of the Kart. There should be a positive locking mechanism for stub axles or on the steering mechanism (near pit-man arm etc.) to control steering locking due to overturning and must prevent the tires from contacting body, or frame members during the track events. Allowable total steering system free play (inclusive of play in all the steering linkages) is limited to 7 degrees, measured at the steering wheel. The steering wheel must be mechanically connected to the front wheels, **Rack & pinion or steer- by-wire or electronic steering is strictly prohibited.** The steering column material should be of cylindrical section of dimension at least 18mm OD and 1.5mm wall thickness. Solid Material can also be used for steering column. The steering column should be properly fixed to the frame through supports and steering wheel should be properly mounted. **Welding steering wheel on the column & column to the frame is strictly prohibited.**

9) Maximum Turning Radius- Maximum **turning radius allowed for every vehicle is 3.0m**. Every vehicle has to clear "**turning radius test**" to get T.I. Ok.

10) Braking System- The brake system installed in the vehicle must be capable of stopping the vehicle in a straight line without losing control during the brake test. Vehicle must posses with disc brake mechanism**, bleeding ports for disc caliper should be upside to that of piston mechanism of caliper.** There should be no leakage from the tandem master cylinder (TMC) or reservoir. Pedal should only be operated from driver's foot and use of hand operated levers for braking mechanism is not allowed. **Electronic braking systems or any other type braking systems are strictly prohibited.**

11) Fuel Tank & Spill over Prevention and Drain- The minimum capacity of the fuel tank must be 3 liters. Every vehicle must have a spill over prevention container mounted on the top of the fuel tank which should prevent the fuel being accidentally spilling on any part of the engine or exhaust. The sidewalls of the Spillover tank should be at least 3 inch in height. The spillover tank should be manufactured and mounted properly. The fuel in the spillover tank must be transported to the ground by the use of proper drain linings. **Drain lining** could be a fuel line material or any pipe. Drain lining should be directed towards the ground with the rigid support of the frame with proper nylon ties.

12) Driver Seat and its position- Every team must use proper kart seat. The seat mounting must be rigid enough to withstand the dynamic conditions. The driver seat should at least **1 inch** away from the firewall. Under no conditions shall the seat protrude below the lower plane of chassis frame. The seat supports should hold the seat in at least 4 points, two at top and two under the thighs towards the front portion of the seat.

13) Driver Sitting Posture- Driver sitting posture should be designed in accordance with that of shown in below Figure. There must be proper and sufficient gap between the steering wheel and the driver's body parts.

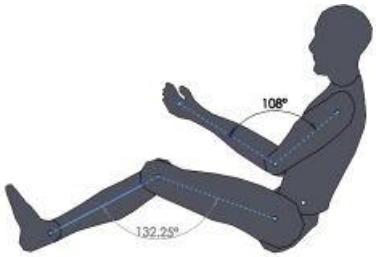

Driver Seat Belt- Strictly Prohibited.

14) Pedals – The order of the pedals should be A-B-C from right to the left of the kart when viewed from the rear the kart.

Positive lock should be provided with the throttle pedal.

15) Brake Light- The vehicle must be installed with a brake light red in colour, which is clearly visible from the rear. If LED brake light is used, it must be clearly visible in very bright sunlight. This light must be mounted at Vehicle center axis. All the electrical connections done must be well insulated.

16) Brake over Travel Switch- All the vehicles must have a properly mounted brake over travel switch. This switch should not be operable in normal braking conditions; it must act in case of sudden loss of hydraulic pressure or over travel of the brake paddle. This switch must kill the engine but not the brake light connection; the brake light should glow when pressed. Kill switch, which needs continuous pressure to be applied for the operation, are not allowed.

17) Reverse Light and Alarm- It is mandatory that each vehicle (If introducing reverse gear) must be equipped with a reverse light (White colour, visible at a minimum distance of 10 meters from vehicle). Reverse alarm is mandatory to install for safety reason, which shall operate when the reverse gear is engaged.

18) Exhaust System- The exhaust system can be re-routed with proper dimension tubing. The exhaust system must be properly shielded preventing the delicate parts, which may get affected if exposed to the heat. The exhaust must be mounted properly to avoid the

physical contacts of the viewers or the technical inspectors. **Shielding to exhaust pipe with cotton rope, jute rope is strictly prohibited**. Team can use metallic porous sheet to cover the exhaust pipes. The shielding of exhaust must be such that it does not cause hindrance in the heat dissipation of the exhaust pipe. The exhaust outlet must be made such that it redirects all the output gases in downward direction.

19) Kill Switch- The vehicle must be equipped with **at least two kill switches**. These kill switches must be able to cut off all the electrical connections including ignition system and must be rigidly mounted near the steering wheel where the driver can easily control it. Second kill switch should be placed in **left side** of the vehicle such that in emergency the Bystander can operate it easily. Only push and pull type & pull and rotary types of kill switches are allowed to use. Kill switch, which needs continuous pressure to be applied for the operation, are not allowed.

NOTE:

The kill switch must not cut off the brake light connection.

The kill switch must be installed properly and rigidly in a case. Mounting the kill switch with plastic/metallic ties or wires is strictly prohibited.

20) Visibility Requirements- The engine compartments and kill switches must be completely visible to the examiners.

21) Base Floor- Every vehicle should be equipped with base plate protecting driver from any foreign material accidentally entering from base of the vehicle. Base plate should completely cover the vehicle from front end of the vehicle to the rear part of the driver seat.

NOTE: All the Electrical harness and Brake linings should be properly clamped above the base plate.

22) Lock Nuts- Nylon lock nuts are mandatory to be used everywhere (including bodyworks) in the vehicle. Failure to fulfill this, no team will get "T.I. OK" for the vehicle. Teams are advised to carry atleast one set of nylon lock nuts as spare.

23) Tools- Teams should carry their own tools, welding machines, cutting machines, spare parts to the final event venue.

24) Bolts- All bolts used in the system must meet metric grade M8.8. No fasteners used should be less than 8.8hardness. All fasteners used should have min 3 threads showing past the nut.

25) Fire Extinguisher- Each team must have at least two (2) no's of 02 kg of capacity each ABC type fire extinguishers. One to be placed with vehicle and another with crew member at all dynamic events. Fire extinguisher should be in working condition. It should bear a sticker or a bill clearly mentioning its expiry/renewal dates.

26) Path for Wires and Pipes- No pipelines/wire connections must go under the chassis. It is strictly prohibited. Doing so may lead to disqualification of the team.

27) Firewall- Firewall is a boundary, which protects the driver from the heat produced by the engine. So, the firewall must be made up of a suitable material, which can solve the purpose. It should be made in such a manner that driver's body parts are not affected by the engine heat/fire at any time during the dynamic/static condition. There should be min 2-inch clearance between the firewall and the engine. And there should be a min 1-inch clearance between the firewall and the driver seat. The height of the firewall should be minimum 5-inches and maximum 7-inches above to the engine head. The length/width of the firewall should be more than 5 inches of the length / width of the Engine or seat whichever is maximum.

NOTE: Acrylic/Plastic/perforated sheets are not acceptable. Tested specimen with the testing results/reports is required to be produced during the inspection of the vehicle if any material, which is not easily decipherable, is used in the manufacturing of the firewall.

28) Battery- Teams are adviced to use dry battery as per engine configuration and other requirements. There should be a proper rigid mounting for battery in a **vertical axis** to the frame. Battery must maintain a significant distance (at least 4inches) from engine, driver, fuel tank, fuel lines etc.

29) Vehicle's Mass - The overall weight of the vehicle should not **exceed 120 kg** when driver is not on-board.

30) Push & Pull bars- Vehicles may not move under their own power anywhere but on the practice or competition tracks. Off track vehicles must be pushed at a normal walking pace by means of Push Bar/members pushing the vehicle.

NOTE: Teams must have their own fabricated push/pull bars. If not "**T.I ok"** will not be given.

31) Vehicle Stand– Kart Stand is essentially required during the Final Round. In order to safely move their kart, the stand should have 4 wheels. Teams must make portable kart stand for convenience, also care should be taken to restrict its motion whenever needed. The height of the stand from the ground must be in between 35 inches to 45 inches. During every static activity, the kart will be placed on the stand only.

32) Jack Point- There must be two jack points in the vehicle one in front and the other in the rear. These jack points must be polished with the orange colour for easy visibility. Just below the main chassis there must be of 8 inches in length (minimum 1 inch OD) tube welded and equally distributed to both the sides from center line of the chassis, which will serve the purpose of the jack point and the same arrangement must be installed in the front and rear of the vehicle.

33) Toe Point- There must be two toe points in the vehicle one in front and the other in the rear. Toe points should be mounted exactly at the centerline of the kart possessing the minimum revolution of 60˚ about horizontal axis of the vehicle. Toe point should not be directly welded to frame, it should be assembled to the frame with the help of secondary member. These toe points must be polished with the orange color for easy visibility installed in the front and the rear of the Kart.

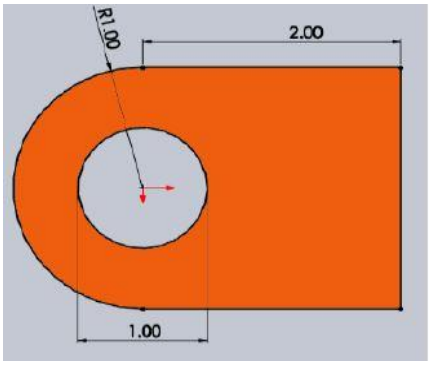

NOTE: The installation of toe point must be done in such a manner that it can rotate at least **60**° about the horizontal axis of the kart without compromising the strength of the joint. The revolution of the toe point will be measured from the pivot point when the toe point is resting 15 degrees above the horizontal plane of the kart. **The dimensions provided in the image are for reference. The length of toe point should be decided keeping in view of pulling and pushing the kart with the help of push/pull bars. Dimensions are in inches**.

NOTE: Front toe point must rest in second quadrant; Rear toe point must rest in first quadrant. Representation of toe points given below is just for reference and no dimensions except the angles are to be 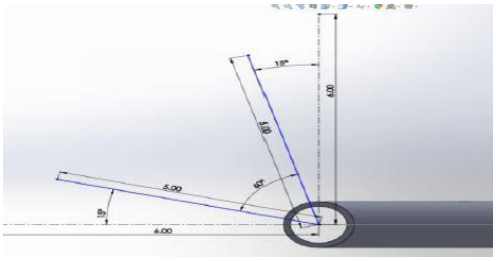

followed.

34) Bumper - Bumpers must be installed in the front, rear, left and right side of the vehicle. Front and rear bumpers should cover the tyres and protect them from front/rear collision, which may occur during the dynamic events. The main member of bumper should be made up of single tube, tube having joints will be discarded and the vehicle will not be given a TI OK. The rear bumper must be covered with foam pipe insulation (if it is not surrounded by body work) so as to avoid injuries, which may occur at any time during dynamic events. Bumper should not be welded to the frame, that should be removable at the time of disassemble and assemble test.

35) Minimum required Bodyworks- Every kart must be equipped with the minimum bodyworks as represented below in the “Figure”. The body parts which a kart should have are-

- ✓ Front bodyworks
- ✓ Rear bodyworks (optional)
- ✓ Right side bodyworks

They must under no circumstances be located either above the plane through the top of the front and rear tires or beyond the plane through the external part of the front and rear wheels.

- ✓ Left side bodyworks.

They must under no circumstances be located either above the plane through the top of the front and rear tires or beyond the plane through the external part of the front and rear wheels.

The teams are free to use self-fabricated body works or any type of bodyworks but the minimum requirements must be fulfilled. **36) Chain Guard-** Every vehicle should be equipped with proper chain guard. It should restrict accidental contact of any person standing outside. It should be mounted properly any un-usual sound is not acceptable.

37) Vehicle Identification- Before coming to Final Round all the teams compulsorily need to paste Kart Number stickers (6inch DIA) on front body panel, both sides and rear bumper bodyworks.

Reserved Space- Just above the Kart Number sticker a space of 8”x4” should be left blank for the GKC-2023 Logo.

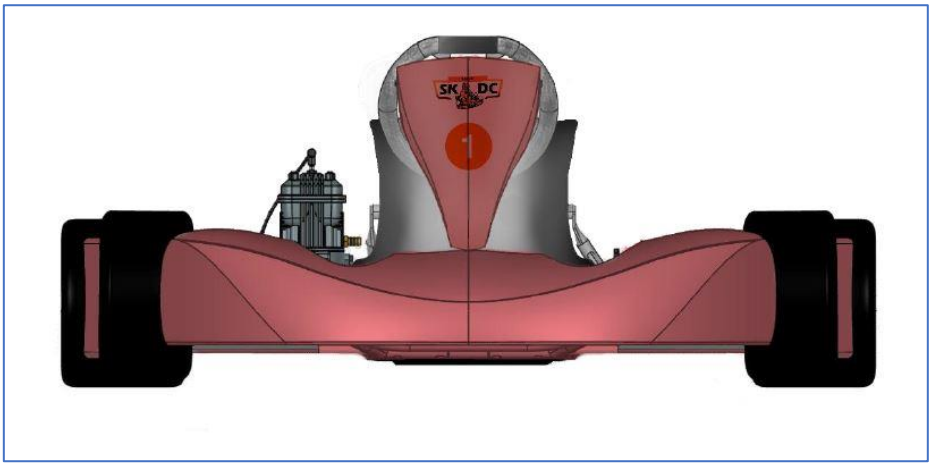

Virtual Round (VR) and Final Round (FR)

Virtual Round (VR)- In VR presentation of all the research and development over the vehicle is to be given in 20 minutes. Documents Required in VR

a) Design Report

b) Entrepreneurship/Start-up Plan proposal

c) Innovation Report

d) Cost Report

e) FMEA

f) DVP

g) Gantt Chart

h) Individual work distribution Report

a) Design Report- The design report must contain all the necessary details related to the vehicle like analysis, calculations, etc. This report must not exceed 12 pages (including acknowledgement, abstract, introduction, references) and it is recommended to provide at least three different views of vehicle drawing with proper dimensions. IEEE format must be followed in the design report.

b) Entrepreneurship/Start-up Plan–Refer to Rules given below

c) Innovation Report- The innovation report must contain the concept of the innovation, feasibility of the innovation chosen, it's effect on the environment , cost that will be incurred for applying it and it's utility.

d) Cost Report- The format of Cost Report which will be given by us after registration must be followed. The cost report must include all the calculations and cost of the parts procured and also its machining cost as per market rates and Bill of Material. No need of accounting vat and other taxes in the cost report.

e) FMEA- Failure modes and effects analysis (FMEA) is a step-by-step approach for identifying all possible failures in a design, a manufacturing or assembly process, or a product or service. “Failure modes” means the ways, or modes, in which something might fail. Failures are any errors or defects, especially ones that affect the customer, and can be potential or actual. “Effects analysis” refers to studying the consequences of those failures. The format of FMEA which will be given by us after registration must be followed.

f) Design Validation Plan- The design validation plan is the assurance that a product, service, or system meets the needs of the customer and other identified stakeholders. It often involves acceptance and suitability with external customers. All the virtual and real time tests and analysis are to be included in the design validation plan. The format of DVP which will be given by us after registration must be followed.

g) Gantt chart- Gantt Charts illustrate the start and finish dates of the terminal elements and summary elements of a project. Terminal elements and summary elements comprise the work breakdown structure of the project. This chart is basically the management of the project and distribution of different tasks in the team members with completion deadlines.

h) Individual work distribution Report-This report must contain the work allocation to the each and every individual of the team. In the final event evaluation of the report is conducted.

Final Round- Final Round consists of three stages; Static Test, Dynamic Test and the Endurance Test. Participating teams are suggested to take hard copy of all the documents and reports at the time of these tests, anything can be asked by the judges to show and failure to present may lead into the disqualification from the respective test.

Static Tests

 Design Report VS Vehicle Analysis- The vehicle will be verified with the final design report. Deviating up to 10% from the final design report is acceptable but on further deviations teams will be penalized accordingly.

 Entrepreneurship/Start-up Plan- Teams are expected to prepare a complete Entrepreneurship/Start-up plan by understanding the sector and industry they are working for the event. Every team has to do the complete market survey of the same segment and prepare the strategies to target the customers. Teams need to study the **government schemes and policies** for establishing a entrepreneurship**, type of firm**, procedure for **firm registration** and come with the steps needed to establish a industry. Team has to prepare a presentation, which has to be presented during the final round. Team has to convince the judges with their E-plan presentation. Every team has to prepare a detailed report and the

presentation (12 slides). Team has to submit the complete Entrepreneurship/Start-up plan report in two phases. Teams are advised not to include any confidentiality agreement in the Entrepreneurship/Start-up plan; our aim is to evaluate the concept of your business idea not to sell out your idea in market. Preliminary report has to be submitted before the final round (Refer the event calendar for the submission schedule) and the final report has

to be submitted in the final round Teams are expected to work upon the following points and prepare both the report and the presentation accordingly;

 Innovation - The innovation will be evaluated in the Final Round. The evaluation will be done on the basis of team interview, proper working of innovation throughout the event (in all the dynamic tests) and the concept of the innovation. Innovations which have already been done successfully in the field of go-karting; will not be considered as the innovations, teams need to come up with entirely new and unique idea of innovation.
Note: In the Final Event Design Evaluation, Manufacturing Level and Innovation Evaluation may take at once depending upon the time constraints.

 Technical inspection-

a) Technical inspection is done to check whether the Kart is able to participate safely and reliably in the event. T.I will also check for compliance with the Rule book.

b) There are no points for this round. Each team must qualify this round.

c) Technical inspection will conduct with a series of stages. Each stage will check each aspect of the Kart. In each stage one or more specialists from that department will be there. He / She will scrutinize the Kart.

d) Teams have to clear all the stages of the Technical Inspection. Stages are listed below.

- Safety
- Weight and dimensional test
- Vision test Structural reliability and design
- Steering, Braking, Engine transmission
- Cost Report and Bills

e) Only three members are allowed per team during T.I. Team captain and one of the drivers must be present in full driver safety kit. It is team's responsibility to bring all the documents during T.I which includes following data

- Driver's license (original)
- Insurance documents (original)
- Blood group report of both drivers
- Complete reports including design report

f) Each Kart must pass all parts of technical inspection and testing before it is permitted to participate in any dynamic event. The exact procedures and instruments employed for inspection and testing are entirely at the discretion of the Chief Scrutinizer.
g) Visible access can be provided by removing body panels or by providing removable access panels to check the various components.

h) Karts must be presented for technical inspection in finished condition, i.e. fully assembled, complete and ready-to-run. Scrutinizer will not inspect any Go-Kart presented for inspection in an unfinished state.

 Safety Equipment's- Every team is advised to use proper safety equipment's during manufacturing or during any repair work on site. Technical Inspector will check safety equipment's during Technical Inspection.
Requirements – Welding face shield, safety gloves, full sleeves cotton inner shirt, apron, safety shoes, safety goggles
Disassembly and Assembly (70 Points)- This event consists of the dismantling and assembling the different parts of the vehicle. Maximum six (5) members can engage in this activity and maximum time limit for the completion of this event is forty (40) minutes.
Parts to be dismantled and assembled from the vehicle:
 Body works & Bumpers- All the body parts/panels & Bumpers must be detached from the vehicle

 Wheels- Wheels must be detached from the vehicle

 Exhaust System-No need to separate the engine from the chassis. Only exhaust system to be dismantled.

 Steering- Steering wheel and all the links must be dismantled.

 Fuel tank- Removal of fuel tank is necessary in this event

 Seat-Seat must be removed from the Kart.

Disassembly Scoring Formula:
Disassembly Score = 70x $[(T_{longest}–T_{yours})/ (T_{longest}–T_{shortest})]$
Where: "$T_{shortest}$" is the fastest time by any team

“$T_{longest}$” is the slowest time by any team

“T_{yours}” is your team’s best time including penalties.

Note – The above stated parts/components are to be completely removed from the vehicle first then only assembly will be allowed. Teams violating this rule will straight away get DNF.

Requirements - Welding face shield, safety gloves, full sleeves cotton inner shirt, apron, safety shoes, safety goggles

 Every member should wear proper shoes, workshop gloves and full sleeves cloths.

Dynamic and Endurance Events

Brake Test- It’s mandatory for a vehicle to pass the brake test to participate in any of the dynamic events. The vehicle must stop in a straight line after the brake is applied on the vehicle and the wheels on which the brake mechanism is acting must get locked immediately after pedal is pressed. Each vehicle will be given only 3 attempts to pass the brake test. After the successful brake test attempt, vehicle will not be allowed to avail remaining attempts (if left**). If any team will not qualify brake test, they will not be allowed for further tests except the static rounds.**

Vehicle dynamic stability will also be checked during the test, vehicle possessing abnormal behavior will be checked again. The TI can be cancelled if the vehicle is found dynamically unstable or unsafe in the Brake Test. Few frequently occurred problems are listed below-

 Un-usual sound from transmission (generally sound produced by chain).

 Unsafe frame (Design and manufacturing)

 Improper wheel alignment etc.

If these issues found with the vehicle after static inspection, vehicle Technical Inspection will be cancelled and again will be given chance to rectify it.

Brake Test Track- The brake test will be conducted on 150ft (may vary) straight course of track.

NOTE: Vehicle’s speed must not be less than 40kmph while attempting brake test. Brake Test is not having any points, but it’s mandatory for a vehicle to clear the test to qualify for any of the dynamic event.

Skid Pad- The objective of the skid-pad event is to measure the vehicle's cornering ability on a flat surface while making a constant-radius turn. The skid pad layout may be a figure of '8' or 'S' depending on the track condition but minimum track width will be 3m and shortest turning radius 3m.

NOTE: Each team may make two (2) attempts. Scoring will be based on the better of the two attempts. Timing may be done using either electronic systems or stop watches.

Scoring Formula-

Scoring Formula-

Skid Pad score = 80x $[(T_{longest} – T_{yours})/ (T_{longest} – T_{shortest})]$

Penalties-

 Cones Down or Out- A penalty of 2 second will be added to the time for every cone that is hit or knocked down (including gate cones).

 Incorrect Laps- Vehicles that do not follow procedure, i.e. run an incorrect number of laps or run the Laps in the wrong sequence will be classified as DNF.

Autocross- The objective of the autocross event is to evaluate the vehicle's manoeuvrability and handling qualities on a tight course without the hindrance of competing vehicles. The autocross course will combine the performance features of acceleration, braking, and cornering into one event. The vehicle will be staged such that the front wheels are behind the starting line. The timer starts only after the vehicle crosses the start line. There will be no particular order of the vehicles to run each heat. The organizer will determine the allowable windows for each heat and retains the right to adjust for weather or technical delays. Vehicles that have not run by the end of the heat will be disqualified for that heat NOTE: Each team may make two (2) attempts with different drivers. Scoring will be based on the better of the two attempts. Timing may be done using either electronic systems or stopwatches.

Autocross Course Specifications & Speeds

The following specifications will suggest the maximum speeds that will be encountered on the course. Average speeds should be 40 km/hr (25 mph) to 48 km/hr (30 mph).

Straights: No longer than 60m with hairpins at both ends (or) no longer than 45m with wide turns on the ends.

Hairpin Turns: Minimum of 7m outside diameter (of the turn).

Slaloms: Cones in a straight line with a variable gap ranging from 3.6m to 4.6m. (we have to adjust according to track)

Miscellaneous: Chicanes, multiple turns, decreasing radius turns, etc. The minimum track width will be 5.5m (18 feet).

Note: Specifications may vary depending on track conditions.

Scoring Formula-

Autocross score = 80 x [($T_{longest}$–T_{yours})/ ($T_{longest}$–$T_{shortest}$)]

Penalties-

 Cones Down or out- Two (2) seconds per cone, including any after the finish line.

 Out of Course - Driver must re-enter the track at or prior to the missed gate or a twenty (20) second penalty will be assessed.

 Missed Slalom- Missing one or more gates of a given slalom will be counted as one "off-course" per occurrence. Each occurrence will incur a twenty (20) second penalty.

Endurance and Fuel Economy - The following are general guidelines for conducting the endurance and fuel economy event. The organizers reserve the right to establish procedures specific to the conduct of the event at the site.

Note- The track layout is flexible

Endurance Objective (200 points) - The Endurance Event is designed to evaluate the overall performance of the vehicle and to test the vehicle's reliability.

Fuel Economy test (50 points) - The fuel economy test is based on the average litres per kilometre fuel economy obtained during the endurance heat.

NOTE- The vehicle's fuel economy will be measured in conjunction with the endurance event. The fuel economy under racing conditions is important in most forms of racing and also shows how well the vehicle has been tuned for the competition. This is a compromise event because the fuel economy score and endurance score will be calculated from the same heat. No refuelling will be allowed during an endurance heat Course speeds can be estimated by the following course specifications. Average speed should be 45 km/hr to 55 km/hr with top speeds of approximately 90 to 100 km/hr.

Procedure-All the karts eligible for the endurance and fuel economy test will be divided into batches (number of karts per batch will be decided on the endurance day only). All the karts will be fuelled together maintaining the actual endurance order and batch order. After the fuel fill all the karts will make one friendly lap on the endurance test track. No overtaking will be allowed during the friendly lap; a penalty of 30 points will be imposed for overtaking during this lap. Immediately after friendly lap batch one karts will start their

endurance test and remaining batches will be parked near to the start line. The event will be run as a single heat may vary from 15-25kms or 20-30 laps (depends upon track) Teams are not allowed to work on their vehicles during the heat. A driver change may be done during a two (2) minute period at the midpoint of the heat (after middle lap). Wheel-to-wheel racing is prohibited. Passing another vehicle may only be done in an established passing zone.

Note – Procedure and number of laps of endurance test are flexible

Endurance Fuel Fill- Before entering the event each vehicle's fuel tank must be filled to the fuel level line at the fuelling station. During fuelling, once filled to the scribe line, no shaking or tilting of the tank or fuel system (incl. entire vehicle) is allowed.

Vehicle Starting/Restarting-The vehicle must be capable of starting / restarting without external assistance at all times once the vehicle has begun the heat. If a vehicle stalls out on the track, it will be allowed one (1) lap by the car that is following it (approximately one (1) minute) to restart. If a vehicle has a restart problem at the end of Driver Change, it will be allowed a further two (2) minutes to restart the engine. If restarts are not accomplished within the above times, the car will be deemed disabled and scored DNF for the heat.

Driver Changing Procedure- Lap time will begin when Driver A enters the course and crosses the timing line. Driver A will drive for half of the total laps, and pull into the driver change area. Two (2) minutes are allowed for the team to change drivers.

 Driver A exits the vehicle and any necessary adjustments will be made to the vehicle to fit Driver B (seat cushions, pedal position, etc.). Only driver will be allowed in the driver change area. Extra people entering the driver change area will result in a 20-point penalty to the final endurance score for each extra person entering the area.

 Driver B will then be secured in the vehicle. The driver change area will be placed such that the timing system will see the driver change as an extra-long lap. Unless this driver change takes longer than two minutes, this extra-long lap will not count. If the driver change takes longer than two minutes, the extra time will be counted into the final time. Driver B will drive for rest of the laps and elapsed time will stop when the car completes the total laps. Driver B will proceed directly to the fuelling station.

Vehicle Breakdown and Stalls- If a vehicle breaks down it will be removed from the course and will not be allowed to re-enter the course. If a vehicle stalls, or ingests a cone,

etc., it will be allowed to restart and re-enter the course where it went off, but no work may be performed on the vehicle. If a car stalls and cannot be restarted without external assistance, the track workers will push the car off the track.

Endurance Lap Timing- Each lap of the endurance event will be individually timed either by electronic means, or by hand. The time for an individual heat will be determined by subtracting the extra-long lap for the driver change from the total time and adding any penalty points.

Eligibility:

1.Team Requirement:

Team must have Team Name, Team Logo, Team Captain and faculty advisor. Maximum 5 teams can participate from one college. Maximum allowed participants for a team is 12.

2.Driver's Requirement:

*Age- at least 18 years

*Driver's License must be needed (four-wheeler)

*Driver's Accessories: Suit, Under clothing, Helmet, Neck Support, Gloves, Socks & Shoes, Balaclava

3.**Vehicle Requirement:**

*Vehicle should be made based on the rules provided in the Rule Book.

*Technical inspection & Design Report

4.**Rounds to be conducted for Testing**

*Brake Test-100 points

*Autocross test-100 points

*Traction test-100 points

*Business test (Business presentation & Innovation)

*Race-300 points

*Skip pad-100 points

Tests Information:

1)Technical Inspection & Design Report: -

Objective of Technical Inspection is to ensure safety and security of the driver with the vehicle. Vehicle technical aspects will be crosschecked with Rule Book.

Objective of Design Report is to verify design and manufacturing of vehicle along with technical knowledge of team as per specifications in their submitted report.

2)Brake Test: -

Vehicle should run for 35m and will have to stop in specified range, end of 35mm flat run, vehicle speed must be at least 25 kmph. Each vehicle has three chances.

3)Skip pad Layout: -

There will be two pairs of concentric circles in a figure of eight pattern, the centres of these circles will be 20m apart. A lap is defined as travelling around one of the circles from the start/stop line and returning to the start/stop line.

4)Autocross Test: -

Objective is to evaluate the vehicles manoeuvrability and handling qualities on a tight course without the hindrance of competing vehicles. The vehicle will be staged such that front wheels are 2m behind the starting line. The timer starts only after the vehicle crosses the start line. Cones are placed apart from each other the vehicle should travel between these cones.

5)Traction Test: -

It's like a Tug of War between two karts. Its objective is to test the strength and pickup of the go-karts.

5.Awards and Rewards:

All the participants who participated in this event will be allocated with a participation certificates. By considering all the points that are conducted in the tests, winners and runners will be awarded 1,50,000/- worth of cash prizes. As our motto objective is to bring out new innovative ideas from fellow young engineers. The best team with a new great innovative idea about go-kart is also been awarded.

Penalties-

 Off Course-For an OC, the driver must re-enter the track at or prior to the missed gate or a **twenty (20) second** penalty will be assessed.

 Penalties for Moving Violations- Failure to obey a flag: 1 minute

 Over Driving (After a closed black flag): 1 Minute

Vehicle to Vehicle contact: DISQUALIFICATION or PENALTY.

 Mechanical Problem- No additional penalty other than the time lost to ensure that the car is safe to continue.

 Reckless or Aggressive Driving- Any reckless or aggressive driving behaviour (such as forcing another car off the track, refusal to allow passing, or close driving that would cause the likelihood of car contact) will result in a black flag for that driver. When a driver receives a black flag signal, he must proceed to the penalty box to listen to a reprimand for his driving behaviour. The amount of time spent in the penalty box will vary from one (1) to four (4) minutes depending upon the severity of the offense.

 Inexperienced Driver- the Chief Director of Operations may disqualify a driver if the driver is too slow, too aggressive, or driving in a manner that, in the sole opinion of the event, officials, demonstrates an inability to properly control their car resulting in a DNF.

Endurance Score Formula-

Endurance score = 200x $[(T_{longest} – T_{yours}) / (T_{longest} – T_{shortest})]$

Fuel Economy- The fuel economy score is based on the average litres per kilometre fuel economy obtained during the endurance heat.

Fuel Economy Score Formula-

If V_{your} is less than V_{max} then the following equation will be used to determine the fuel economy score:

Fuel Economy Score = 50X $[(V_{max} – V_{yours})/(V_{max} – V_{min})]$

NOTE- If V_{yours} equal to V_{max} then 0 points will be given to the performing vehicle.

Prize distribution

Category	Reward
Champion	40000
Runner up	25000
Endurance & Fuel economy Winner	10000
Endurance & Fuel economy Runner up	7000
First in Dynamic Rounds	5000
First in Static Rounds	5000
Best Design	7000
Skid Pad Winner	7000
Skid Pad Runner Up	5000
Break test	6000
Break test Runner Up	4000
Autocross Winner	6000
Autocross Runner Up	4000
Disassembly & Assembly*	4500
Low weight*	3000
Entrepreneurship/Start-up Plan	5000
Aesthetics	3000
Best Innovation	3500

Note:

 If a team wins multiple awards, maximum applicable discount for the awards won by team will be taken into consideration.

 In order to be eligible for Disassembly and Assembly Award, team must complete the Disassembly and Assembly in 9 minutes. Prize money of Rs.5000/- each will be given to top 5 teams in Disassembly and Assembly round.

 In order to be eligible for Low Weight Award, weight of the Kart must be below 85 kgs and team must qualify for Endurance.

********ALL THE BEST FUTURE ENGINEERS********