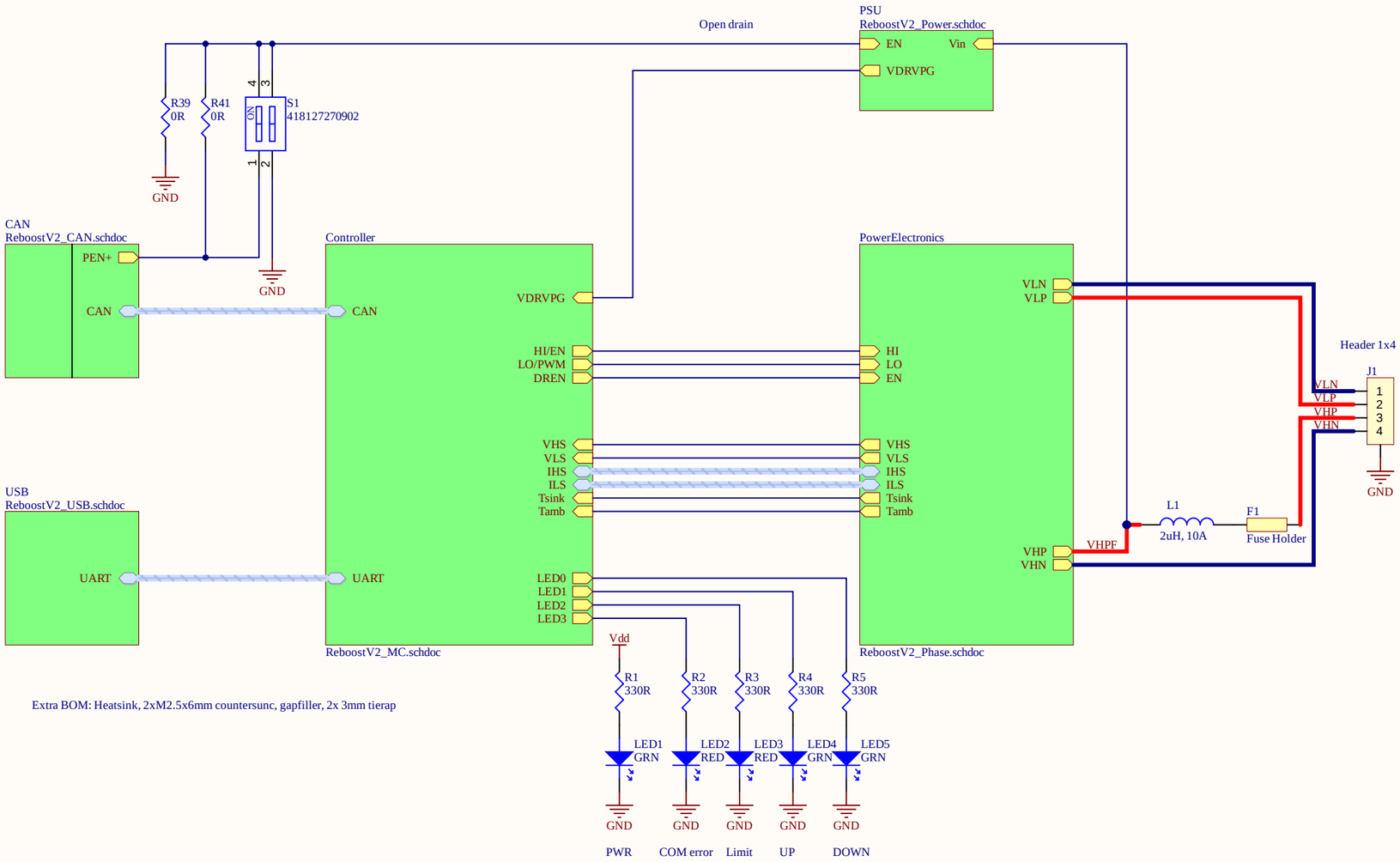

Extra BOM: Heatsink, 2xM2.5x6mm countersunc, gapfiller, 2x 3mm tierap

PROJECT
ReboostV2

www.tpee.nl

TITLE
ReboostV2 Top Sheet

SIZE A3

Author: Tjitte van der Ploeg

FILE NAME ReboostV2_toplevel.SchDoc

SHEET 1 OF 9

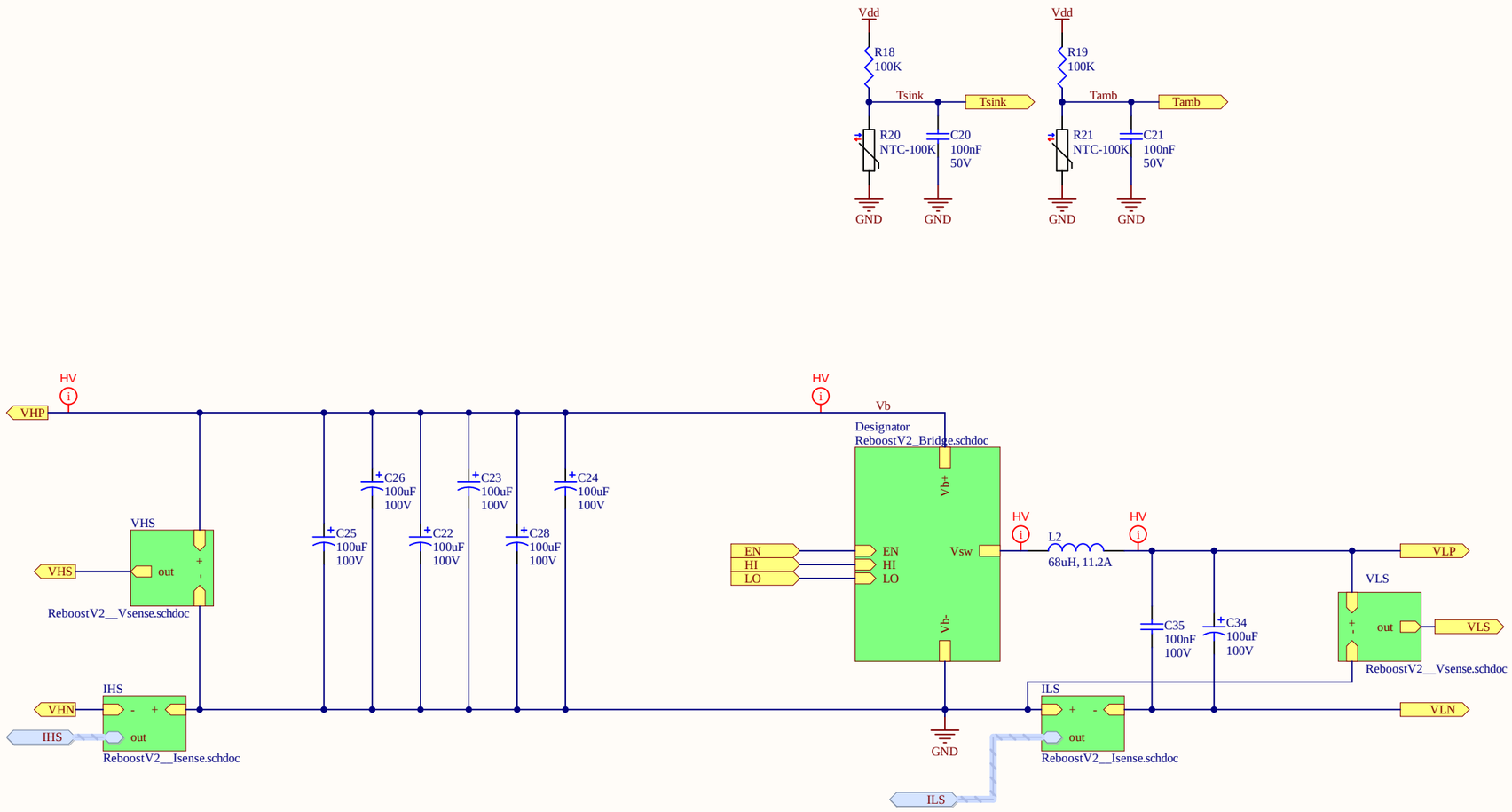

PROJECT	ReboostV2
TITLE	Power Electronics
SIZE	A3
Author:	Tjitte van der Ploeg
FILE NAME	ReboostV2_Phase.SchDoc
SHEET	2 OF 9

www.tpee.nl

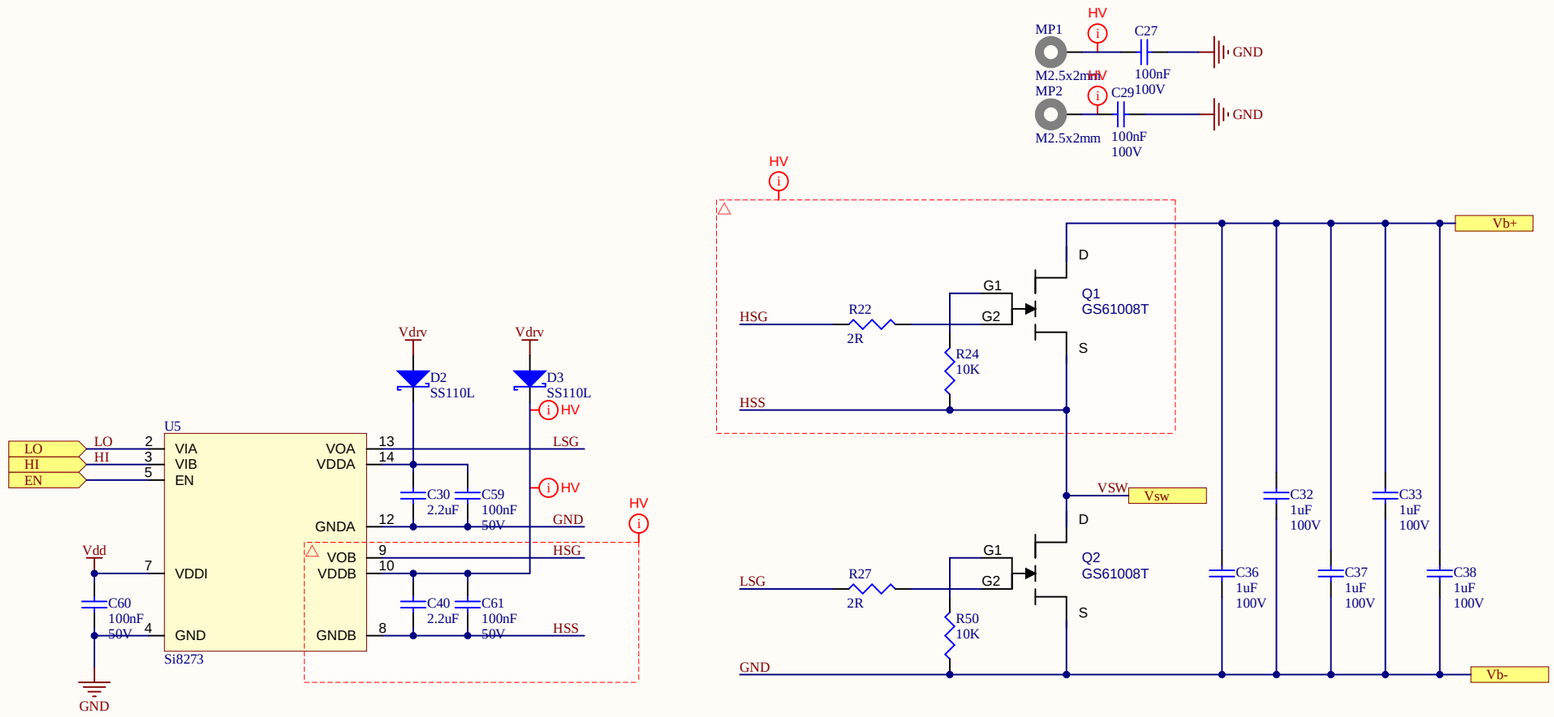

PROJECT
ReboostV2

www.tpee.nl

TITLE
Halfe Bridge

SIZE A3

Author: Tjitte van der Ploeg

FILE NAME ReboostV2_Bridge.SchDoc

SHEET 3 OF 9

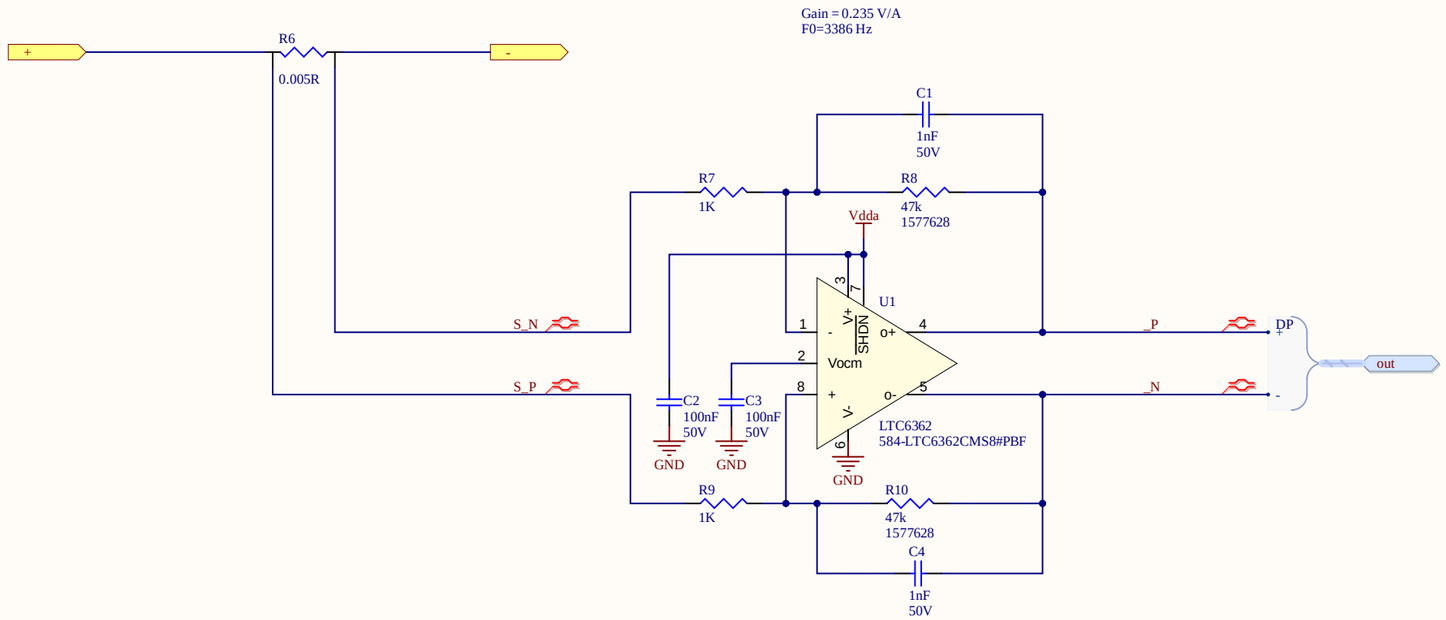

PROJECT
ReboostV2

www.tpee.nl

TITLE
Current Sesnor

SIZE A3

Author: Tjitte van der Ploeg

FILE NAME ReboostV2__Isense.SchDoc

SHEET 4 OF 9

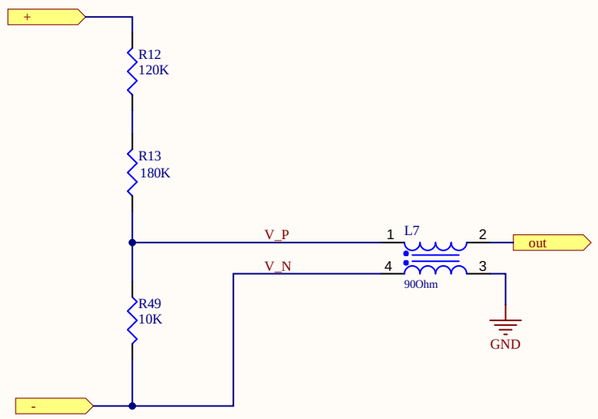

PROJECT
ReboostV2

www.tpee.nl

TITLE
Voltage Sensor

SIZE
A3

Author: Tjitte van der Ploeg

FILE NAME ReboostV2__Vsense.SchDoc

SHEET 5 OF 9

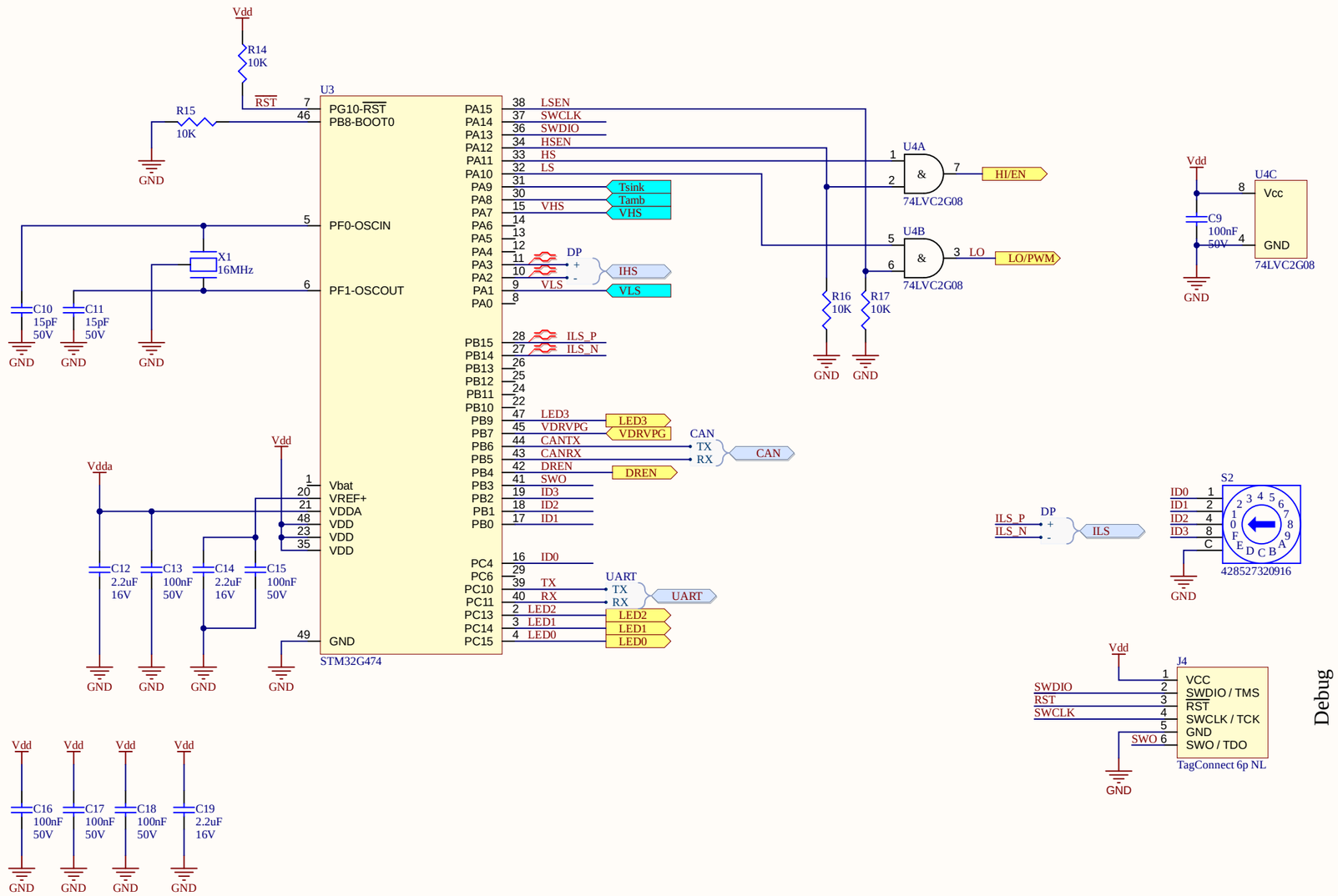

PROJECT
ReboostV2

www.tpee.nl

TITLE
Microcontroller

SIZE A3

Author: Tjitte van der Ploeg

FILE NAME ReboostV2_MC.SchDoc

SHEET 6 OF 9

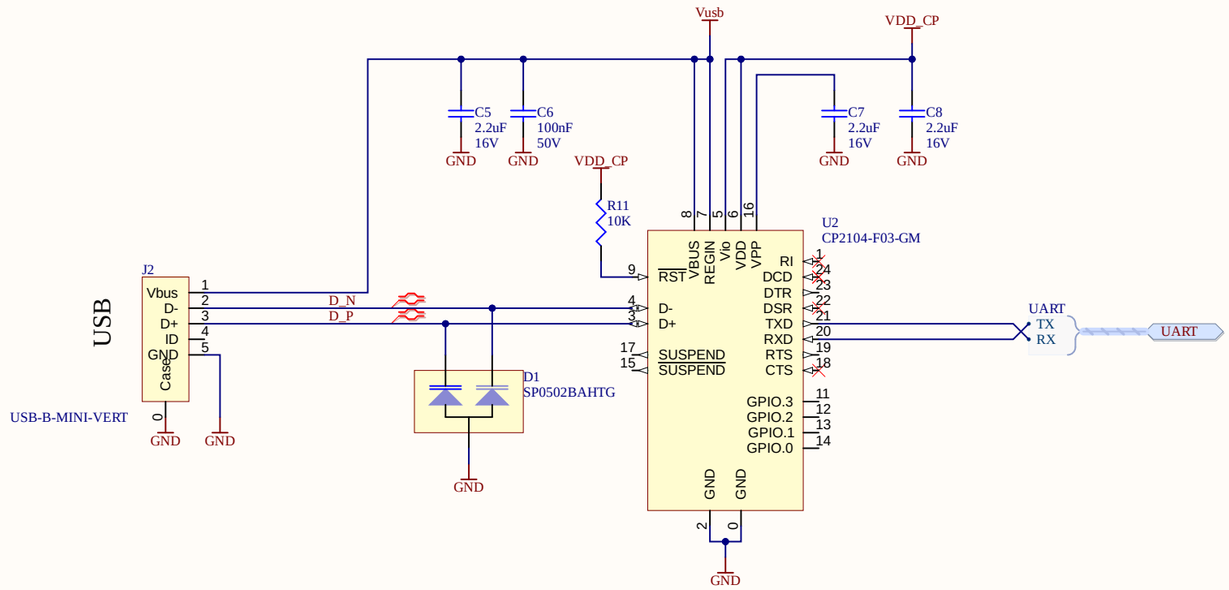

PROJECT	ReboostV2
	www.tpee.nl
TITLE	USB
SIZE	A3
Author:	Tjitte van der Ploeg
FILE NAME	ReboostV2_USB.SchDoc
SHEET	7 OF 9

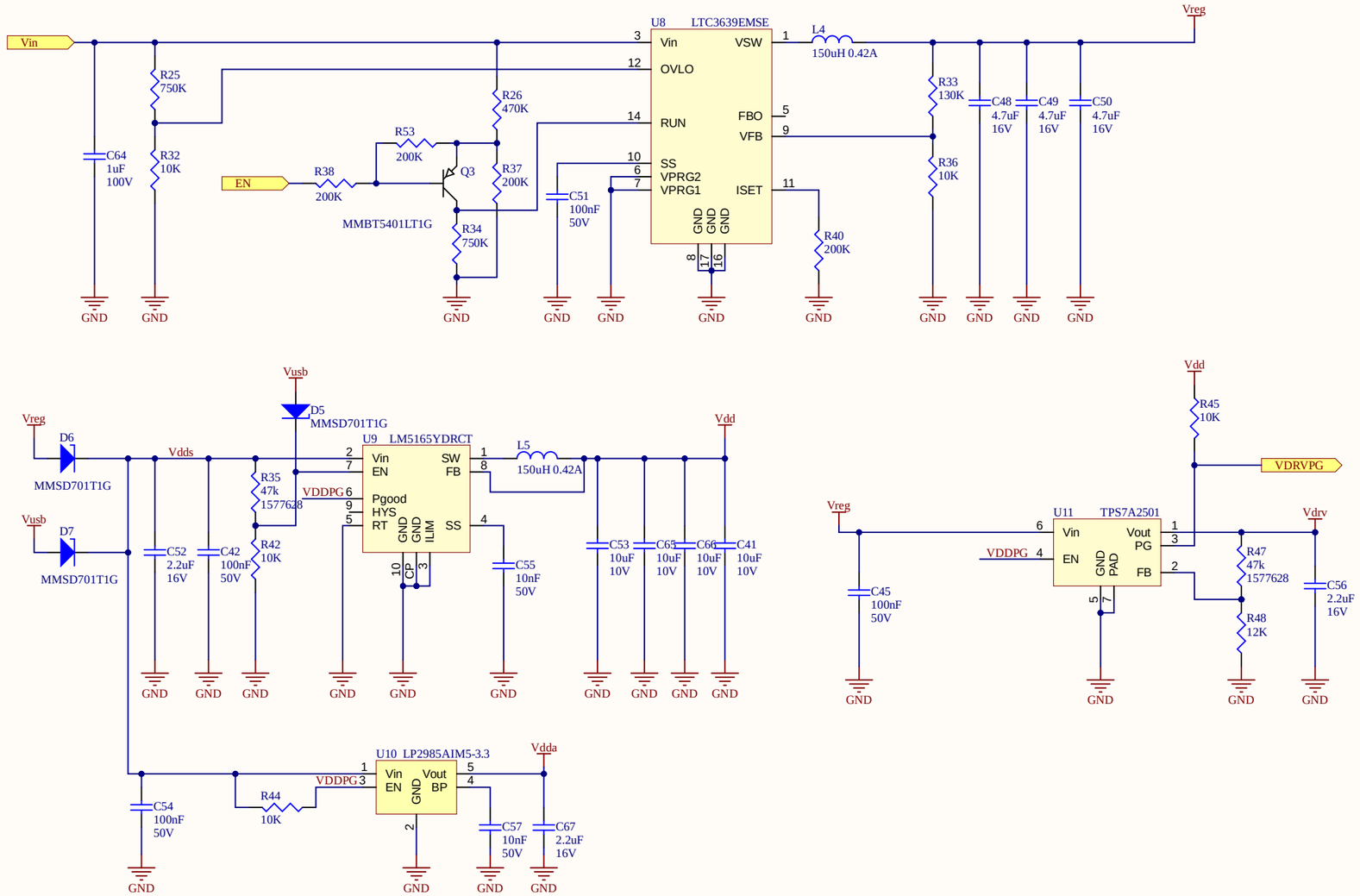

PROJECT
ReboostV2

www.tpee.nl

TITLE
Power Supply

SIZE A3

Author: Tjitte van der Ploeg

FILE NAME ReboostV2_Power.SchDoc

SHEET 9 OF 9

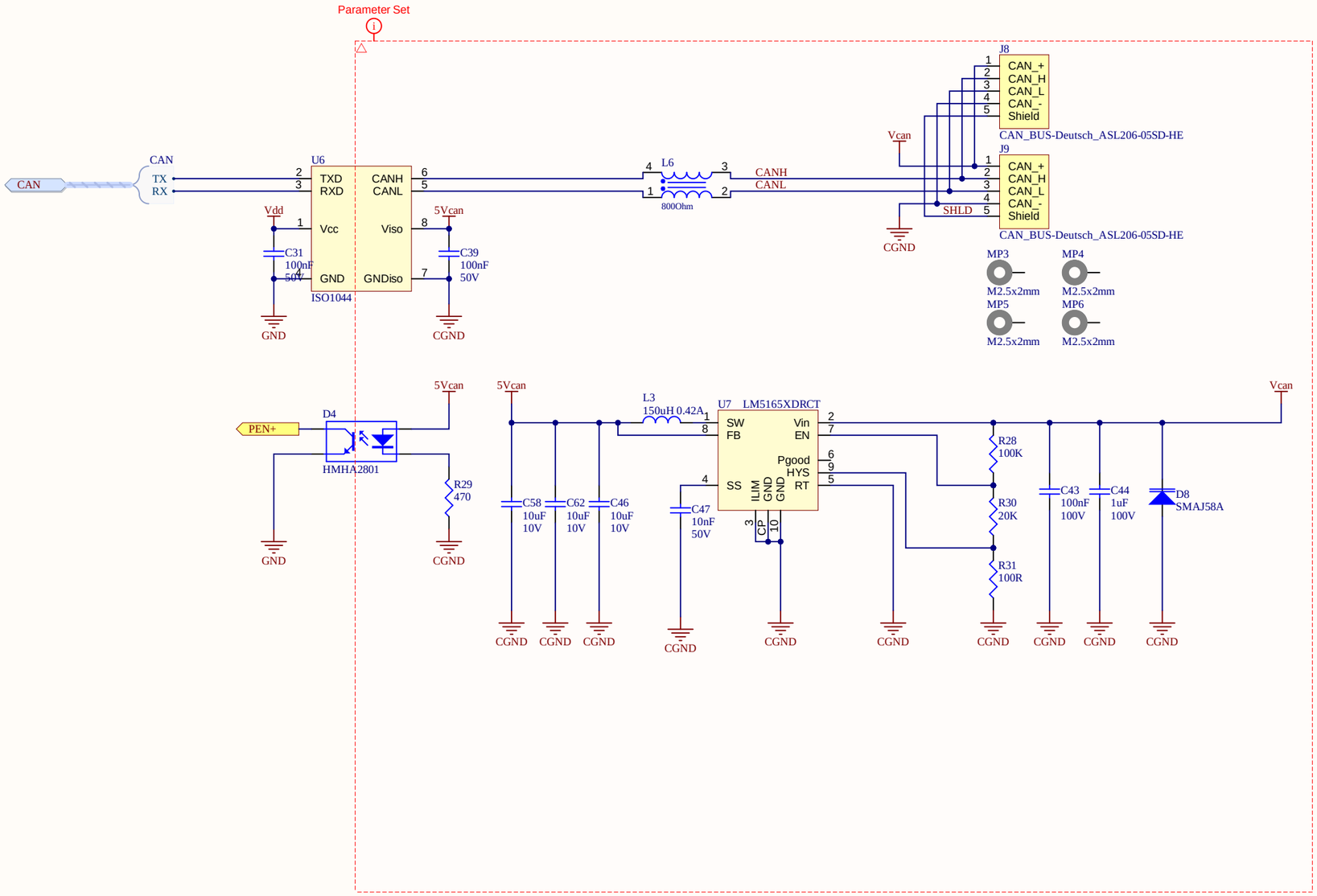

PROJECT	ReboostV2
TITLE	CAN
SIZE	A3
Author:	Tjitte van der Ploeg
FILE NAME	ReboostV2_CAN.SchDoc
SHEET	9 OF 9

www.tpee.nl