Call: HORIZON-MSCA-2025-PF
(MSCA Postdoctoral Fellowships 2025)

Topic: HORIZON-MSCA-2025-PF-01-01

Type of Action: HORIZON-TMA-MSCA-PF-EF
(HORIZON TMA MSCA Postdoctoral Fellowships - European Fellowships)

Proposal number: 101285973

Proposal acronym: ScrollNets

Type of Model Grant Agreement: HORIZON Unit Grant

Table of contents

Section	Title	Action
1	General information	
2	Participants	
3	Budget	
4	Ethics and security	
5	Other questions	

This proposal version was submitted by **Pablo Donato** on **10/09/2025 16:48:07** Brussels Local Time. Issued by the Funding & Tenders Portal Submission System.

1 - General information

Fields marked * are mandatory to fill.

Topic	HORIZON-MSCA-2025-PF-01-01	Type of Action	HORIZON-TMA-MSCA-PF-EF
Call	HORIZON-MSCA-2025-PF	Type of Model Grant Agreement	HORIZON-AG-UN

Acronym ScrollNets

Proposal title Towards a Diagrammatic Foundation for Next-Generation Interactive Theorem Provers

Note that for technical reasons, the following characters are not accepted in the Proposal Title and will be removed: < > " &

Scientific Area ENG - Information Science and Engineering (ENG)

Please select up to 5 descriptors (and at least 3) that best characterise the subject of your proposal, in descending order of relevance.

Descriptor 1 Theoretical computer science, formal methods

Descriptor 2 Human computer interaction and interface, visualization and natural language processing

Descriptor 3 Logic and foundations

Descriptor 4 Epistemology, logic, philosophy of science

Free keywords *proof theory, deep inference, existential graphs, Charles S. Peirce, non-classical logics, cyclic proofs, programming languages, dependent types, interactive theorem proving, graphical user interface*

Please choose the scientific area and descriptors carefully, and in order of importance, since this will guide the REA in the selection of experts for proposal evaluation and the allocation of proposals to experts.

Application forms

Proposal ID **101285973**

Acronym **ScrollNets**

Abstract *

Interactive Theorem Provers (ITPs) are powerful software tools for formal verification, yet their steep learning curve hinders broader adoption. The ScrollNets project addresses this challenge by developing a new foundation for ITPs based on "scroll nets", a novel diagrammatic proof formalism introduced by the researcher. Rooted in Peirce's Existential Graphs, scroll nets combine the structural flexibility of deep inference with an intuitive graphical representation, enabling proofs to be constructed via direct-manipulation gestures in a "Proof-by-Action" paradigm.

The project's primary objective is to establish scroll nets as a robust and expressive framework for a new generation of interactive, user-friendly ITPs. The research is structured into four work packages: WP1 will establish the core metatheory, including normalization and sequentialization properties. Subsequent work packages will extend the framework to richer logical systems, including classical and bi-intuitionistic logic (WP2), fixpoint logics for recursion (WP3), and dependent type theory (WP4).

By making formal reasoning more accessible, ScrollNets promises significant scientific, societal, and economic impacts. It will provide an intuitive "no-code" platform for mathematics education, empower domain experts in industrial formal verification, and enhance the reliability of neurosymbolic AI systems. The project will be hosted at the University of Birmingham's world-leading Theory of Computation group, leveraging the supervisor's expertise to ensure its success and advance the state-of-the-art in proof theory and interactive theorem proving.

Remaining characters 364

Has this proposal (or a very similar one) been submitted in the past 2 years in response to a call for proposals under any EU programme, including the current call? ○ Yes ◉ No

Please give the proposal reference or contract number.
Previously submitted proposals should be with either 6 or 9 digits.

This proposal version was submitted by **Pablo Donato** on **10/09/2025 16:48:07** Brussels Local Time. Issued by the Funding & Tenders Portal Submission System.

Proposal ID **101285973**

Acronym **ScrollNets**

Declarations

Field(s) marked * are mandatory to fill.

1) We declare to have the explicit consent of all applicants on their participation and on the content of this proposal. * ☒

2) We confirm that the information contained in this proposal is correct and complete and that none of the project activities have started before the proposal was submitted (unless explicitly authorised in the call conditions). * ☒

3) We declare:
- to be fully compliant with the eligibility criteria set out in the call
- not to be subject to any exclusion grounds under the EU Financial Regulation 2018/1046
- to have the financial and operational capacity to carry out the proposed project. * ☒

4) We acknowledge that all communication will be made through the Funding & Tenders Portal electronic exchange system and that access and use of this system is subject to the Funding & Tenders Portal Terms and Conditions. * ☒

5) We have read, understood and accepted the Funding & Tenders Portal Terms & Conditions and Privacy Statement that set out the conditions of use of the Portal and the scope, purposes, retention periods, etc. for the processing of personal data of all data subjects whose data we communicate for the purpose of the application, evaluation, award and subsequent management of our grant, prizes and contracts (including financial transactions and audits). * ☒

6) We declare that the proposal complies with ethical principles (including the highest standards of research integrity as set out in the ALLEA European Code of Conduct for Research Integrity, as well as applicable international and national law, including the Charter of Fundamental Rights of the European Union and the European Convention on Human Rights and its Supplementary Protocols. Appropriate procedures, policies and structures are in place to foster responsible research practices, to prevent questionable research practices and research misconduct, and to handle allegations of breaches of the principles and standards in the Code of Conduct. * ☒

7) We declare that the proposal has an exclusive focus on civil applications (activities intended to be used in military application or aiming to serve military purposes cannot be funded). If the project involves dual-use items in the sense of Regulation 2021/821, or other items for which authorisation is required, we confirm that we will comply with the applicable regulatory framework (e.g. obtain export/import licences before these items are used). * ☒

8) We confirm that the activities proposed do not
- aim at human cloning for reproductive purposes;
- intend to modify the genetic heritage of human beings which could make such changes heritable (with the exception of research relating to cancer treatment of the gonads, which may be financed), or
- intend to create human embryos solely for the purpose of research or for the purpose of stem cell procurement, including by means of somatic cell nuclear transfer.
- lead to the destruction of human embryos (for example, for obtaining stem cells)

These activities are excluded from funding. * ☒

9) We confirm that for activities carried out outside the Union, the same activities would have been allowed in at least one EU Member State. * ☒

The coordinator is only responsible for the information relating to their own organisation. Each applicant remains responsible for the information declared for their organisation. If the proposal is retained for EU funding, they will all be required to sign a declaration of honour.

False statements or incorrect information may lead to administrative sanctions under the EU Financial Regulation.

This proposal version was submitted by **Pablo Donato** on **10/09/2025 16:48:07** Brussels Local Time. Issued by the Funding & Tenders Portal Submission System.

2 - Participants

List of participating organisations

#	Participating Organisation Legal Name	Country	Role	Action
1	THE UNIVERSITY OF BIRMINGHAM	United Kingdom	Coordinator	

This proposal version was submitted by **Pablo Donato** on **10/09/2025 16:48:07** Brussels Local Time. Issued by the Funding & Tenders Portal Submission System.

Organisation data

PIC	Legal name
999907526	*THE UNIVERSITY OF BIRMINGHAM*

Short name: UoB

Address

Street	Edgbaston
Town	BIRMINGHAM
Postcode	B15 2TT
Country	United Kingdom
Webpage	www.bham.ac.uk

Specific Legal Statuses

Legal person	yes	Academic Sector	yes
Public body	no		
Non-profit	yes		
International organisation	no		
Secondary or Higher education establishment	yes		
Research organisation	no		

SME Data

Based on the below details from the Participant Registry the organisation is not an SME (small- and medium-sized enterprise) for the call.

SME self-declared status	21/01/2022	- no
SME self-assessment	unknown	
SME validation	24/03/1900	- no

Departments carrying out the proposed work

Department 1

Department name	School of Computer Science	☐ not applicable
	☒ Same as proposing organisation's address	
Street	Edgbaston	
Town	BIRMINGHAM	
Postcode	B15 2TT	
Country	United Kingdom	

Application forms

Proposal ID **101285973**

Acronym **ScrollNets**

Short name **UoB**

Supervisor

This will be the person the EU services will contact concerning this proposal (e.g. for additional information, invitation to hearings, sending of evaluation results, convocation to start grant preparation). The data in blue is read-only. Details (name, first name and e-mail) of Main Contact persons should be edited in the step "Participants" of the submission wizard.

Title Dr

Gender ○ Woman ◉ Man ○ Non Binary

First name* **Anupam**

Last name* **Das**

E-Mail* **a.das@bham.ac.uk**

Position in org. Associate Professor

Department School of Computer Science

☐ Same as organisation name

☒ Same as proposing organisation's address

Street Edgbaston

Town BIRMINGHAM

Post code B15 2TT

Country United Kingdom

Website https://www.anupamdas.com/cv/

Phone *+xxx xxxxxxxxx*

Phone 2 *+xxx xxxxxxxxx*

Other contact persons

First Name	Last Name	E-mail	Phone
Eleonore	Dispersyn	h2020@contacts.bham.ac.uk	+xxx xxxxxxxxx

This proposal version was submitted by **Pablo Donato** on **10/09/2025 16:48:07** Brussels Local Time. Issued by the Funding & Tenders Portal Submission System.

Application forms

Proposal ID **101285973**

Acronym **ScrollNets**

Short name **UoB**

Researcher

The name and e-mail of the Researcher and Supervisor are read-only in the administrative form, only additional details can be edited here. To give access rights and contact details of contact persons, please go back to Participant's page of the submission wizard and save the changes.

Last Name*	Donato	Last Name at Birth	Donato
First Name(s)*	Pablo	Gender*	○ Woman ◉ Man ○ Non binary
Title	Dr	Country of residence*	France
Nationality*	France	Nationality 2	
Date of Birth (DD/MM/YYYY)	29/04/1996	Country of Birth*	France
		Place of Birth	PARIS 11E ARRONDISSEMENT

Contact address

Current organisation name	Charles University
Current Department/Faculty/Institute/ Laboratory name	Department of Distributed and Dependable Systems

☐ Same as organisation address

Street	17 rue Cepre		
Postcode/Cedex	75015	Town	Paris
Phone	+33 6 52 31 82 10	Country	France
Phone2 / Mobile	+xxx xxxxxxxxx		
E-Mail*	pablo.donato@tuta.io		

ORCID	0000-0001-7883-6754
Researcher ID	

The maximum length of the identifier is 11 characters (ZZZ-9999-2010) and the minimum length is 9 characters (A-1001-2010).

Other ID	*Please enter the type of ID here*	*Please enter the identifier number here*

Qualifications

Doctorate Date of (expected) award	Select the exact date (DD/MM/YYYY)	29/05/2024

This proposal version was submitted by **Pablo Donato** on **10/09/2025 16:48:07** Brussels Local Time. Issued by the Funding & Tenders Portal Submission System.

Place of activity/place of residence (previous 5 years - most recent one first)

Indicate the period(s) and the country/countries in which you have legally resided and/or had your main activity (work, studies, etc) during the last 5 years up until the deadline for the submission of the proposal.

Please fill in this section without gaps. Short stays (as defined in the Guide for Applicants) shall not be listed in this box.

Period from	Period to	Duration (days)	Country
10/09/2020	10/09/2025	1827	France
	Total	1827	

Application forms

Proposal ID	**101285973**
Acronym	**ScrollNets**
Short name	**UoB**

Role of participating organisation in the project

Project management	☒
Communication, dissemination and engagement	☒
Provision of research and technology infrastructure	☐
Co-definition of research and market needs	☐
Civil society representative	☐
Policy maker or regulator, incl. standardisation body	☐
Research performer	☒
Technology developer	☐
Testing/validation of approaches and ideas	☐
Prototyping and demonstration	☐
IPR management incl. technology transfer	☐
Public procurer of results	☐
Private buyer of results	☐
Finance provider (public or private)	☐
Education and training	☒
Contributions from the social sciences or/and the humanities	☐
Other If yes, please specify: (Maximum number of characters allowed: 50)	☐

This proposal version was submitted by **Pablo Donato** on **10/09/2025 16:48:07** Brussels Local Time. Issued by the Funding & Tenders Portal Submission System.

List of up to 5 publications, widely-used datasets, software, goods, services, or any other achievements relevant to the call content.

Type of achievement	Short description (Max 500 characters)
Publication	*URL: https://arxiv.org/abs/2507.19689* *This is my latest preprint, submitted at the CSL 2026 conference. It introduces the theory of scroll nets, explaining its motivation as a new foundation for graphical proof theory that is better suited to interactive theorem proving applications. It focuses on the implicative fragment of intuitionistic logic, showing how scroll nets generalize constructs both from Gentzen-style and deep inference proof theory, as well as simply-typed λ-calculus.*

List of up to 5 most relevant previous projects or activities, connected to the subject of this proposal.

Name of Project or Activity	Short description (Max 500 characters)
Actema	*Web demo: http://www.actema.xyz/* *Actema is a prototype of GUI for interactive theorem proving by direct manipulation of formulas in goals. Its development was started by Pierre-Yves Strub and Benjamin Werner in 2019. I contributed many new features during my Master's thesis, and took over most of its development during my PhD thesis.*
coq-actema	*Talk: https://youtu.be/X-VAE_keUJ0* *GitHub: https://github.com/Champitoad/coq-actema* *coq-actema is a system that integrates the interface of Actema in the Rocq proof assistant as an interactive proof view. Actema is packaged as an Electron application that receives goals from Rocq over HTTP, and sends back graphical actions to a Rocq plugin that compiles them into proof terms.*
Flower Calculus and Flower Prover	*DOI: https://doi.org/10.4230/LIPIcs.FSCD.2024.5* *Web demo: https://www.lix.polytechnique.fr/Labo/Pablo.DONATO/flowerprover/* *The flower calculus is a novel graphical proof system I have designed for intuitionistic first-order logic, inspired by existential graphs. While it does not have a computational interpretation, it enjoys good proof-theoretic properties that make it suitable for interactive theorem proving. This has been explored in a prototype of proof building GUI called "Flower Prover".*
Deep Inference for Graphical Theorem Proving	*URL: https://theses.fr/2024IPPAX015* *This is my PhD thesis. It subsumes all aforementioned projects, and includes a lot of unpublished material that could be exploited for future publications during the MSCA postdoctoral fellowship. In particular chapters 7 and 8 introduce "bubble calculi", a new diagrammatic proof formalism inspired by nested sequents in deep inference, that gives a novel treatment of the relationship between intuitionistic, bi-intuitionistic and classical logic.*

Description of any significant infrastructure and/or any major items of technical equipment, relevant to the proposed work.

Name of infrastructure of equipment	Short description (Max 300 characters)

Gender Equality Plan

Does the organization have a Gender Equality Plan (GEP) covering the elements listed below? (•) Yes ( ) No

Minimum process-related requirements (building blocks) for a GEP

- **Publication:** formal document published on the institution's website and signed by the top management
- **Dedicated resources:** commitment of human resources and gender expertise to implement it.
- **Data collection and monitoring:** sex/gender disaggregated data on personnel (and students for establishments concerned) and annual reporting based on indicators.
- **Training:** Awareness raising/trainings on gender equality and unconscious gender biases for staff and decision-makers.
- **Content-wise, recommended areas** to be **covered** and addressed via concrete measures and targets are:
    - work-life balance and organisational culture;
    - gender balance in leadership and decision-making;
    - gender equality in recruitment and career progression;
    - integration of the gender dimension into research and teaching content;
    - measures against gender-based violence including sexual harassment.

This proposal version was submitted by **Pablo Donato** on **10/09/2025 16:48:07** Brussels Local Time. Issued by the Funding & Tenders Portal Submission System.

Proposal ID **101285973**

Acronym **ScrollNets**

3 - Budget

Is the Researcher eligible for family allowance?* ○ Yes ◉ No

Duration of fellowship *	Country in which fellowship will take place
24	United Kingdom

	Country Coefficient	Number of Months	Contributions for recruited researchers			Institutional contributions		Total
			Living Allowance	Mobility Allowance	Family Allowance	Research, training and networking costs	Management and indirect costs	
Fellowship	1.417	24	203707.92	17040.00	0.00	24000.00	15600.00	260347.92
Total			203707.92	17040.00	0.00	24000.00	15600.00	260347.92

This proposal version was submitted by **Pablo Donato** on **10/09/2025 16:48:07** Brussels Local Time. Issued by the Funding & Tenders Portal Submission System.

4 - Ethics & security

Ethics Issues Table

1. Human Embryonic Stem Cells and Human Embryos			Page
Does this activity involve Human Embryonic Stem Cells (hESCs)?	◯ Yes	◉ No	
Does this activity involve the use of human embryos?	◯ Yes	◉ No	

2. Humans			Page
Does this activity involve human participants?	◯ Yes	◉ No	
Does this activity involve interventions (physical also including imaging technology, behavioural treatments, etc.) on the study participants?	◯ Yes	◉ No	
Does this activity involve conducting a clinical study as defined by the Clinical Trial Regulation (EU 536/2014)? (using pharmaceuticals, biologicals, radiopharmaceuticals, or advanced therapy medicinal products)	◯ Yes	◉ No	

3. Human Cells / Tissues (not covered by section 1)			Page
Does this activity involve the use of human cells or tissues?	◯ Yes	◉ No	

4. Personal Data			Page
Does this activity involve processing of personal data?	◯ Yes	◉ No	
Does this activity involve further processing of previously collected personal data (including use of preexisting data sets or sources, merging existing data sets)?	◯ Yes	◉ No	
Is it planned to export personal data from the EU to non-EU countries?	◯ Yes	◉ No	
Is it planned to import personal data from non-EU countries into the EU or from a non-EU country to another non-EU country?	◯ Yes	◉ No	
Does this activity involve the processing of personal data related to criminal convictions or offences?	◯ Yes	◉ No	

5. Animals			Page
Does this activity involve animals?	◯ Yes	◉ No	

6. Non-EU Countries			Page
Will some of the activities be carried out in non-EU countries?	◯ Yes	◉ No	
In case non-EU countries are involved, do the activities undertaken in these countries raise potential ethics issues?	◯ Yes	◉ No	
It is planned to use local resources (e.g. animal and/or human tissue samples, genetic material, live animals, human remains, materials of historical value, endangered fauna or flora samples, etc.)?	◯ Yes	◉ No	
Is it planned to import any material (other than data) from non-EU countries into the EU or from a non-EU country to another non-EU country? For data imports, see section 4.	◯ Yes	◉ No	
Is it planned to export any material (other than data) from the EU to non-EU countries? For data exports, see section 4.	◯ Yes	◉ No	
Does this activity involve low and/or lower middle income countries, (if yes, detail the benefit-sharing actions planned in the self-assessment)	◯ Yes	◉ No	
Could the situation in the country put the individuals taking part in the activity at risk?	◯ Yes	◉ No	

7. Environment, Health and Safety	Page

Does this activity involve the use of substances or processes that may cause harm to the environment, to animals or plants.(during the implementation of the activity or further to the use of the results, as a possible impact) ?	◯ Yes	◉ No	
Does this activity deal with endangered fauna and/or flora / protected areas?	◯ Yes	◉ No	
Does this activity involve the use of substances or processes that may cause harm to humans, including those performing the activity.(during the implementation of the activity or further to the use of the results, as a possible impact) ?	◯ Yes	◉ No	

8. Artificial Intelligence			Page
Does this activity involve the development, deployment and/or use of Artificial Intelligence-based systems?	◯ Yes	◉ No	

9. Other Ethics Issues			Page
Are there any other ethics issues that should be taken into consideration?	◯ Yes	◉ No	

I confirm that I have taken into account all ethics issues above and that, if any ethics issues apply, I will complete the ethics self-assessment as described in the guidelines How to Complete your Ethics Self-Assessment ☒

Ethics Self-Assessment

Ethical dimension of the objectives, methodology and likely impact

Explain in detail the identified issues in relation to:
- objectives of the activities (e.g. study of vulnerable populations, etc.)
- methodology (e.g. clinical trials, involvement of children, protection of personal data, etc.)
- the potential impact of the activities (e.g. environmental damage, stigmatisation of particular social groups, political or financial adverse consequences, misuse, etc.)

Remaining characters 5000

Compliance with ethical principles and relevant legislations

Describe how the issue(s) identified in the ethics issues table above will be addressed in order to adhere to the ethical principles and what will be done to ensure that the activities are compliant with the EU/national legal and ethical requirements of the country or countries where the tasks are to be carried out. It is reminded that for activities performed in a non-EU countries, they should also be allowed in at least one EU Member State.

Remaining characters 5000

This proposal version was submitted by **Pablo Donato** on **10/09/2025 16:48:07** Brussels Local Time. Issued by the Funding & Tenders Portal Submission System.

Proposal ID **101285973**

Acronym **ScrollNets**

Security issues table

1. EU Classified Information (EUCI)[2]			Page
Does this activity involve information and/or materials requiring protection against unauthorised disclosure (EUCI)?	○ Yes	◉ No	
Does this activity involve non-EU countries which need to have access to EUCI?	○ Yes	◉ No	
2. Misuse			**Page**
Does this activity have the potential for misuse of results?	○ Yes	◉ No	
3. Other Security Issues			**Page**
Does this activity involve information and/or materials subject to national security restrictions? If yes, please specify: (Maximum number of characters allowed: 1000)	○ Yes	◉ No	
Are there any other security issues that should be taken into consideration? If yes, please specify: (Maximum number of characters allowed: 1000)	○ Yes	◉ No	

Security self-assessment

Please specify: (Maximum number of characters allowed: 5000)

Remaining characters 5000

[2]According to the Commission Decision (EU, Euratom) 2015/444 of 13 March 2015 on the security rules for protecting EU classified information, "European Union classified information (EUCI) means any information or material designated by an EU security classification, the unauthorised disclosure of which could cause varying degrees of prejudice to the interests of the European Union or of one or more of the Member States".

[3]Classified background information is information that is already classified by a country and/or international organisation and/or the EU and is going to be used by the project. In this case, the project must have in advance the authorisation from the originator of the classified information, which is the entity (EU institution, EU Member State, third state or international organisation) under whose authority the classified information has been generated.

[4]EU classified foreground information is information (documents/deliverables/materials) planned to be generated by the project and that needs to be protected from unauthorised disclosure. The originator of the EUCI generated by the project is the European Commission.

This proposal version was submitted by **Pablo Donato** on **10/09/2025 16:48:07** Brussels Local Time. Issued by the Funding & Tenders Portal Submission System.

5 - Other questions

Information on the Researcher (future fellow)

1. Were you in the last 3 years in compulsory national service? ○ Yes ◉ No

2. Did you spend time, in the last 3 years, on procedures for obtaining refugee status (according to the 1951 Geneva Refugee Convention and the 1967 Protocol) in a Member State or Associated Country to Horizon Europe? ○ Yes ◉ No

3. Are you a national of a Member State or Associated Country? ◉ Yes ○ No

Country France

Other Questions

4. Are the research and training activities proposed addressing topics related to nuclear sciences and technology, as outlined in the Guide for applicants for this call and the Euratom Research and Training Programme (ERTP)? ** ○ Yes ◉ No

Answer "Yes" ONLY IF all three conditions below are fulfilled:

- The proposal's research area is covered by the ERTP

- The host organisation (and, if applicable, the Associated Partner for the additional Placement period) is/ are established in a Member State or Associated Country to the ERTP

- The researcher is a national or a long-term resident of a Member State or Associated Country to the ERTP

5. For communication purposes only, the European Commission REA asks for permission to publish the name of the researcher (future fellow) should the proposal be retained for funding. Does the researcher (future fellow) give this permission? ◉ Yes ○ No

6. Some national and regional public research funding authorities run schemes to fund MSCA applicants that score highly in the MSCA evaluation but which cannot be funded by the MSCA due to their limited budget. In case this proposal could not be selected for funding by the MSCA, do the researcher and supervisor consent to the European Commission disclosing to such authorities the results of its evaluation (score and ranking range) together with their names and contact details, non-confidential proposal title and abstract, proposal acronym, and host organisation? ◉ Yes ○ No

This proposal version was submitted by **Pablo Donato** on **10/09/2025 16:48:07** Brussels Local Time. Issued by the Funding & Tenders Portal Submission System.

Part B-1

1 Excellence #@REL-EVA-RE@#

1.1 Quality and pertinence of the project's research and innovation objectives

Proof assistants — also called **interactive theorem provers (ITPs)** — are software tools used to rigorously verify formal modelling and reasoning. Contemporary systems such as *Rocq*, *Lean*, and *Isabelle*[1] offer powerful frameworks for constructing formal specifications and proofs: they have been used successfully in various applications, ranging from the verification of advanced theorems in mathematics to the certification of complex software artifacts such as programming language compilers, operating system kernels and cryptographic protocols[2]. Yet they remain notoriously difficult to learn and use, limiting broader adoption in various settings where they could bring transformative societal impact such as *mathematics education*, *formal verification* and *AI safety*.

The experienced researcher's (ER) work tackles the problem of usability from an original angle, centering around **human interaction**. Building on *Proof-by-Pointing* and *Proof-by-Linking*[3], the *Proof-by-Action* (PbA) paradigm introduced in the ER's PhD thesis enables the construction of proofs by directly manipulating logical statements in a *graphical user interface* (GUI) via natural gestures like *pointing* and *drag-and-drop*. This is still rooted in rigorous **proof theory** by drawing on the recent methodology of *deep inference*[4], and complements fully automated approaches by making **interactive refinement** of proofs more intuitive, thus lowering the barrier to entry.

In this direction, the **scroll nets** introduced recently by the ER offer a new **diagrammatic** framework rooted in Peirce's *existential graphs* (EGs). One performs proofs in EGs by rewriting diagrams in contexts of arbitrary depth (Fig. 1a), and scroll nets record these rewrites *statically* as arrows in a directed graph (Fig. 1b). This yields a representation of proofs that subsumes the *simply-typed λ-calculus* (STLC), the programming language underlying modern ITPs.

Motivated by this discovery, the ScrollNets project will pursue the following ambitious objective:

> *Establish **scroll nets** as the foundation for a new generation of **ITPs** that support **interactive refinement** of formal specifications, proofs and programs through **diagrammatic manipulations** in a GUI.*

Given the early stage of the theory of scroll nets and the expertise of the Theory of Computation group at Birmingham hosting the ER, the ScrollNets project will progress towards this vision by focusing on the following Key Objectives:

> KO1. extend the theory of scroll nets to account for **richer logics**, beyond minimal implicative logic;
>
> KO2. find natural and efficient **translations** of state-of-the-art (SOTA) proof systems and programming languages into scroll nets.

[1] Team, The Rocq Development. The Rocq Prover. Apr. 2025. https://doi.org/10.5281/zenodo.15149629; Moura, Leonardo de, and Sebastian Ullrich. *Automated Deduction – CADE 28*. Edited by André Platzer and Geoff Sutcliffe, 2021, pp. 625–35; Tobias Nipkow, et al., *Isabelle/HOL: a proof assistant for higher-order logic*, vol. 2283 (Springer Science & Business Media, 2002).

[2] Georges Gonthier, "Formal Proof—The Four- Color Theorem" vol. 55, no. 11, 2008, Xavier Leroy, "Formal Verification of a Realistic Compiler", *Commun. ACM* vol. 52, no. 7, July 2009, https://doi.org/10.1145/1538788.1538814, pp. 107–15; Klein, Gerwin, et al. "seL4: Formal Verification of an OS Kernel". *Proceedings of the ACM SIGOPS 22nd Symposium on Operating Systems Principles*, SOSP '09, Oct. 2009, pp. 207–20. https://doi.org/10.1145/1629575.1629596; Gilles Barthe, et al., "EasyCrypt: A Tutorial", *Foundations of Security Analysis and Design VII: FOSAD 2012/2013 Tutorial Lectures*, edited by Alessandro Aldini et al. (Cham: Springer International Publishing, 2014) pp. 146–66.

[3] Yves Bertot, et al., "Proof by pointing", *Theoretical Aspects of Computer Software*, edited by Masami Hagiya and John C. Mitchell, redacted by Gerhard Goos and Juris Hartmanis, vol. 789 (Berlin, Heidelberg: Springer Berlin Heidelberg, 1994) pp. 141–60; Kaustuv Chaudhuri, "Subformula Linking as an Interaction Method", *Interactive Theorem Proving*, edited by Sandrine Blazy et al., redacted by David Hutchison et al., vol. 7998 (Berlin, Heidelberg: Springer Berlin Heidelberg, 2013) pp. 386–401.

[4] Guglielmi, Alessio. Deep Inference. 2014. people.bath.ac.uk/ag248/p/DI.pdf. Accessed 2 Jan. 2024.

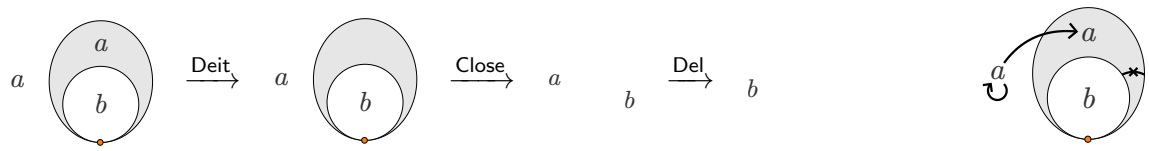

(a) Dynamic rewriting from premiss $a \wedge (a \Rightarrow b)$ to conclusion b

(b) Static representation of rules as arrows in a bigraph

Figure 1: Proof of *modus ponens* $a \wedge (a \Rightarrow b) \vdash b$ in scroll nets. Intuitionistic implication $a \Rightarrow b$ is represented topologically by a *scroll*, i.e. two nested ellipses that intersect exactly at one point, where the outer gray *outloop* (resp. inner white *inloop*) contains the antecedant a (resp. consequent b).

1.1.1 State-of-the-art and contributions

Despite their potential, the adoption of ITPs is limited by both social and foundational factors. While community building, public communication and learning resources are crucial (as shown by the success of Lean and its Mathlib library), many researchers point to deeper issues. A key problem is the overwhelming **bureaucracy** of formalization: formal proofs demand a level of detail that makes them far more time-consuming than informal proofs, with proof size around four times bigger on average[5].

The primary strategy to manage this complexity is *automation*, covering both the *elaboration* of specifications from informal mathematical texts and the *synthesis* of proofs/programs satisfying these specifications. While research on both fronts progresses with the help of SOTA machine learning techniques[6], theoretical work in **type theory** remains fundamental. As the logical backbone of modern ITPs, type theory provides the trust and reliability that distinguishes these systems from purely probabilistic AI.

The modern version of type theory was born in the 1970s from Martin-Löf's work, following the **Curry-Howard correspondence** (CHC) between formal proofs (in the system of *natural deduction*) and computer programs (expressed in the STLC). Despite this remarkable connection, proof theory and type theory have been developed mostly as separate disciplines with different conceptual apparati, preventing cross-pollination of results. This has led the ITP community to devote little attention to *structural* proof theory, the branch of proof theory which studies combinatorial structures for representing and manipulating proofs. The latter could however bring much improvements to the foundations of ITPs, as illustrated by the three broad challenges that motivate its study:

C1. Challenge 1 is the fundamental problem of **proof identity**, also known as Hilbert's 24th problem[7]. It aims to answer the philosophical question "what is a proof?", and the mathematical question "when are two proofs equal?". It is thus intimately related to *homotopy type theory* which also investigates the structure of *equality*, a known weakness of many type theories.

C2. Challenge 2 is to find proof systems for **non-standard logics** — such as *modal*, *intermediate*, *substructural* and *fixpoint* logics — satisfying good enough properties as to render an algorithmic treatment of these logics tractable. The most important property in this respect is that of **cut elimination**, which is essential both to reduce the complexity of *proof search* (proof synthesis in ITP terminology), and to ensure productivity of *program execution* through the CHC. Researchers are increasingly interested in type-theoretic formulations of non-standard logics as they provide expressive languages for specifying behaviors of programs that go beyond pure functions, including effects (modal logics), resource-sensitivity (modal and substructural logics) and recursion (modal and fixpoint logics)[8].

[5] Wiedijk, Freek. The De Bruijn Factor. 2000. www.cs.ru.nl/F.Wiedijk/factor/factor.pdf.

[6] Lasse Blaauwbroek, et al., "Learning Guided Automated Reasoning: A Brief Survey", vol. 14560 (2024) pp. 54–83.

[7] Lutz Straßburger, "The problem of proof identity, and why computer scientists should care about Hilbert's 24th problem", *Philosophical Transactions of the Royal Society A: Mathematical, Physical and Engineering Sciences* vol. 377, no. 2140, 11 Mar. 2019, https://doi.org/10.1098/rsta.2018.0038, p. 20180038.

[8] Wenhao Tang, et al., "Modal Effect Types", *Proc. ACM Program. Lang.* vol. 9, OOPSLA1, Apr. 2025, https://doi.org/10.1145/3720476, Marshall, Danielle, et al. "Linearity and Uniqueness: An Entente Cordiale". *Programming Languages and Systems*, edited by Ilya Sergey, 2022, pp. 346–75. https://doi.org/10.1007/978-3-030-99336-8_13; Ranald Clouston, et al., "The Guarded Lambda-Calculus: Programming and Reasoning with Guarded Recursion for Coinductive Types", *Logical Methods in Computer Science* vol. Volume 12, Issue 3. *arXiv*, arxiv.org/abs/1606.09455, Apr. 2017, https://doi.org/10.2168/LMCS-12(3:7)2016, p. 2019.

C3. Challenge 3 is to improve the **efficiency** of computational procedures on proofs, but also on programs through the CHC. A well-established principle in computer science and software engineering is that choosing appropriate data structures for a problem can lead to orders-of-magnitude improvements in efficiency. Finding the right data structures for such general classes of objects as proofs and programs is thus a very enticing goal with wide implications, including faster automation in ITPs.

In the past decades, two families of proof formalisms have emerged to tackle these challenges:

Graphical proof systems represent proof objects as *graphs* instead of *trees* of inference rules. *Proof nets*[9] are one of the first graphical proof formalisms, meant to reduce the bureauceacy of proofs in linear logic (C2) in order to identify their essence (C1). Further developments stemming from proof nets like the *geometry of interaction* and *interaction nets* have found applications in program optimization for hardware synthesis and parallelized execution[10] (C3). The *combinatorial proofs* of Hughes are direct decendants of proof nets mainly concerned with C1[11], and *string diagrams* from category theory have been applied to logic and programming languages, with well-known connections to proof nets[12].

Deep inference generalizes Gentzen-style proof systems by allowing inference rules to be applied at any depth inside of a formula, rather than being restricted to its top-level logical connective. Calculi of structures and so-called *nested sequent calculi* have been introduced to give proof systems enjoying cut-elimination to most substructural, modal and intermediate logics[13] (C2). Deep inference has also been used in the study of proof complexity, providing in some cases exponential speedup over sequent calculus with respect to proof size, as well as quasipolynomial-time cut-elimination[14] (C3). Lastly, many deep inference formalisms enjoy CHC-style interpretations with variants of λ-calculus, which also improve space efficiency[15].

It is in continuation of this line of research and of his PhD thesis[16] that the ER introduced in his last preprint the graphical framework of **scroll nets**[17]. It is based on a long forgotten diagrammatic proof system called *existential graphs* (EGs), invented by the famous philosopher and logician Charles Sanders Peirce at the dusk of the 19th century — thus predating the very existence of proof theory and computer science. Scroll nets combine the type-theoretic methodology of internalizing inference rules inside judgments with a graphical structure comparable to proof nets and combinatorial proofs. This graph shares the same nodes as the propositions involved in the proof, making scroll nets a more compact representation than these graphical proof structures, but also surprisingly a variant of the notion of *bigraph*. Bigraphs were introduced by Milner as a foundational combinatorial structure encompassing most models of concurrent/parallel computation, including Petri nets and his own CCS and π-calculus[18]. Contrary to proof nets which stem from sequent calculus, scroll nets also enjoy a notion of *detour* arising from the interplay of introduction and elimination rules, making them closer to natural deduction. Although they were developed completely independently,

[9] Jean-Yves Girard, "Linear logic", *Theoretical Computer Science* vol. 50, no. 1, 1987, https://doi.org/https://doi.org/10.1016/0304-3975(87)90045-4, pp. 1–101.

[10] Ghica, Dan R. "Geometry of Synthesis: A Structured Approach to VLSI Design". *Proceedings of the 34th Annual ACM SIGPLAN-SIGACT Symposium on Principles of Programming Languages*, POPL '07, Jan. 2007, pp. 363–75. https://doi.org/10.1145/1190216.1190269; Mackie, Ian. "An Interaction Net Implementation of Closed Reduction". *Implementation and Application of Functional Languages*, edited by Sven-Bodo Scholz and Olaf Chitil, 2011, pp. 43–59. https://doi.org/10.1007/978-3-642-24452-0_3.

[11] Dominic Hughes, "Proofs without syntax", *Annals of Mathematics* vol. 164, no. 3, Nov. 2006, https://doi.org/10.4007/annals.2006.164.1065, pp. 1065–76.

[12] Robin Piedeleu and Fabio Zanasi, "An Introduction to String Diagrams for Computer Scientists", *Elements in Applied Category Theory*, May 2025, https://doi.org/10.1017/9781009625715,

[13] Roman Kuznets and Lutz Straßburger, "Maehara-style modal nested calculi", *Archive for Mathematical Logic* vol. 58, nos. 3–4, May 2019, https://doi.org/10.1007/s00153-018-0636-1, pp. 359–85; Postniece, Linda. "Proof theory and proof search of bi-intuitionistic and tense logic". 2010, Artwork Size: vii, 228 leaves., vii, 228 leaves. https://doi.org/10.25911/5D5FCC3A4DB33.

[14] Anupam Das, "On the Relative Proof Complexity of Deep Inference via Atomic Flows", *Logical Methods in Computer Science* vol. Volume 11, Issue 1, Mar. 2015, https://doi.org/10.2168/LMCS-11(1:4)2015, p. 735; Paola Bruscoli, et al., "Quasipolynomial Normalisation in Deep Inference via Atomic Flows and Threshold Formulae", *Logical Methods in Computer Science* vol. Volume 12, Issue 2, May 2016, https://doi.org/10.2168/LMCS-12(2:5)2016, p. 1637.

[15] Nicolas Guenot, "Nested Deduction in Logical Foundations for Computation", PhD dissertation, Ecole Polytechnique X, 2013; Gundersen, Tom, et al. "Atomic Lambda Calculus: A Typed Lambda-Calculus with Explicit Sharing". *28th Annual ACM/IEEE Symposium on Logic in Computer Science*, June 2013, pp. 311–20. https://doi.org/10.1109/LICS.2013.37.

[16] Donato, Pablo. Deep Inference for Graphical Theorem Proving. 29 May 2024. theses.hal.science/tel-04698985.

[17] Pablo Donato, "Scroll Nets", July 2025, https://doi.org/10.48550/arXiv.2507.19689,

[18] Milner, Robin. "Bigraphical Reactive Systems". *Proceedings of the 12th International Conference on Concurrency Theory*, CONCUR '01, Aug. 2001, pp. 16–35. Accessed 1 July 2025.

EGs and natural deduction were both born from the desire to construct a formalism that comes as close as possible to actual reasoning, and is thus more amenable to human manipulation.

All these discoveries hint toward the potential of scroll nets as a very expressive framework for both proof theory and type theory, unifying features found in most of the formalisms that have emerged from the two disciplines in a natural and efficient way. The ER's vision is to exploit the diagrammatic nature of scroll nets to redesign both the *frontend* and *backend* of ITPs, making them the *interaction substrate*[19] of a new kind of GUI in the PbA paradigm. Indeed, what crucially distinguishes scroll nets from other graphical and deep inference proof systems is their suitability to *interactive manipulation*: every inference rule possesses a natural interpretation as a *gesture* on logical statements, either *pointing* at a statement to be inserted or deleted (looping arrow in Fig. 1b), or (un)copying a designated statement through *drag-and-drop* (non-looping arrow in Fig. 1b). This natural semantics of gestures as a means of moving objects in space is very familiar to users of modern GUIs, and the ER believes it could lead to a **groundbreaking "no-code" approach to formal specification** that is much more intuitive than current textual interfaces.

1.2 Soundness of the proposed methodology

The research objectives of ScrollNets are organised into four technical work packages, detailed below. The core theory will be developed in WP1 and then extended to richer logics in WP2, WP3 and WP4, meeting KO1. WP3 and WP4 will deal with crucial features found in SOTA proving and programming systems like recursion and dependent types, contributing to KO2.

WP1. ScrollNets will start in the restricted and well-understood setting of minimal implicative logic, with the aim to prove formally two key meta-theoretic properties of scroll nets:

- **Normalization** is a standard property of structural proof systems that asserts the existence (and sometimes unicity) of a *normal form* associated to every proof, often exhibited constructively by a terminating (sometimes confluent) rewriting system. The ER has already sketched in his preprint such a rewriting system, called *detour elimination*. It will need a rigorous mathematical analysis to reach its definitive form and obtain more insights on its computational properties. It is expected that detour elimination will be both terminating and confluent as well as highly parallelizable, in analogy with normalization procedures for other graphical formalisms like proof nets and interaction nets.
- **Sequentialization** originates from proof nets: it is a fundamental theorem establishing the *canonicity* of proof nets as a representation of proofs in (some fragments of) linear logic, quotienting proofs in sequent calculus modulo rule permutations. The ER has observed a similar phenomenon in scroll nets, where multiple *proof traces* (as in Fig. 1a) which only vary in the order of inferences can build the same scroll net (as in Fig. 1b). Moreover, there is a bijective correspondence between the inferences in a proof trace and their static representation as edges in the associated scroll net, which preserves enough information to enable efficient reconstruction of possible traces from the latter. WP1 will workout the details of the sequentialization theorem and define formally such a reconstruction algorithm, which is not known to have any equivalent in the proof-theoretic landscape.

WP2. Oostra already identified how to capture intuitionistic disjunction in EGs, by considering a *horizontal* generalization of the scroll where one can have an arbitrary number h of inloops attached to the same outloop[20]. The ER has performed preliminary experiments on a further *vertical* generalization of the scroll where inloops can be recursively attached to other inloops, leading to a notion of (h,v)-scroll with h (resp. v) counting the maximum number of inloops in horizontal (resp. vertical) dimension. Then intuitionistic disjunction and falsehood correspond to the cases where $h > 1$ and $h < 1$, while intuitionistic *subtraction* (also called *exclusion* or *co-implication*) and negation correspond to the cases where $v > 1$ and $v < 1$. This is illustrated in Fig. 2a, which shows the natural encoding of the left introduction rule for subtraction in sequent calculus into scroll nets. WP2 will prove that generalized scrolls lead to a sound and complete characterization of intuitionistic, bi-intuitionistic and classical logic by considering various restrictions on their shapes, as well as the topological properties of the graphs of inference rules that ensue. It

[19] Mackay, Wendy E., and Michel Beaudouin-Lafon. "Interaction Substrates: Combining Power and Simplicity in Interactive Systems". *Proceedings of the 2025 CHI Conference on Human Factors in Computing Systems*, Apr. 2025, pp. 1–16. https://doi.org/10.1145/3706598.3714006.

[20] Arnold Oostra, *Los gráficos Alfa de Peirce aplicados a la lógica intuicionista*, Cuadernos de Sistemática Peirceana 2 (Centro de Sistemática Peirceana, 2010).

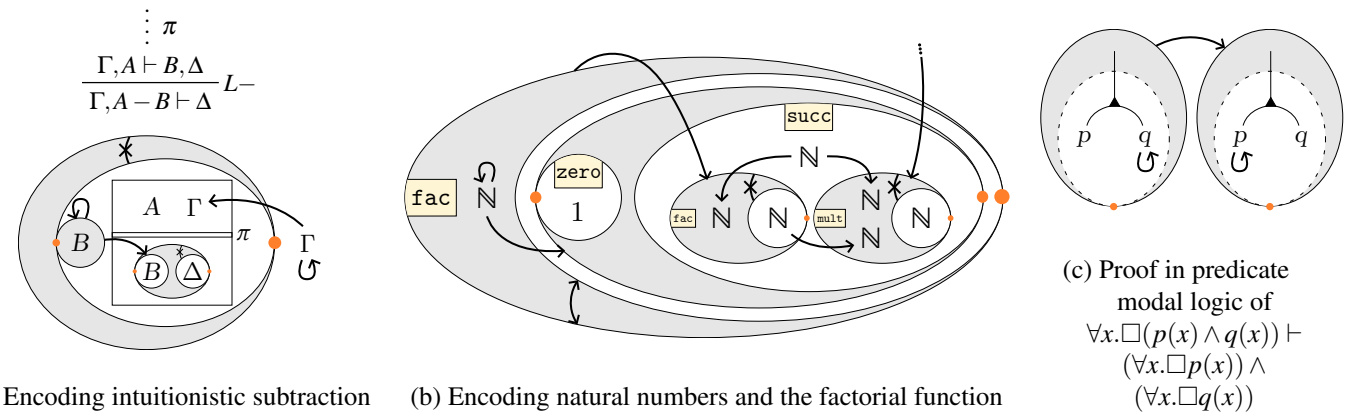

(a) Encoding intuitionistic subtraction (b) Encoding natural numbers and the factorial function (c) Proof in predicate modal logic of $\forall x.\Box(p(x) \wedge q(x)) \vdash (\forall x.\Box p(x)) \wedge (\forall x.\Box q(x))$

Figure 2: Extensions of scroll nets to richer logics (WP2 – WP4)

will also ensure that the sequentialization and normalization results of WP1 extend well to this setting, which would constitute important contributions to both C1 and C2 by providing a non-trivial equational theory for classical and bi-intuitionistic proofs.

WP3. Once disjunction is properly handled by the results of WP2, adding *least* and *greatest fixpoints* of propositions is a natural step to take, that would bring the computational power of SOTA functional programming languages. Indeed, the combination of these two constructs corresponds to *(co-)recursive algebraic data types* through the CHC, which are essential to express (co-)recursive computation on (infinite) tree-structured data. Fig. 2b gives a proof-of-concept of how this could be implemented in scroll nets through the classic example of the factorial function. The idea is to enlarge the space of correct proofs by allowing *self-reference* in inference rules, here represented by the arrow that calls the `fac` scroll into itself. WP3 will explore this idea further as well as its connections to the emerging technology of *cyclic proofs*, addressing both C2 and KO2.

WP4. Work packages WP1 to WP3 deal with various flavours of propositional logic, corresponding to Peirce's system Alpha of EGs. However, Peirce also explored extensions of EGs with new diagrammatic constructs that go beyond propositional logic: system Beta used so-called *lines of identity* (LoI) to capture both quantifiers and equality in *predicate logic*; while system Gamma was a more experimental attempt at capturing both *modal* and *higher-order* logics with a special kind of epistemic negation called "broken cut", represented by a dashed ellipse whose content should be interpreted as "possibly not true"[21]. This is illustrated in Fig. 2c, where the left scroll can be read classically as $\neg\exists x.\diamond\neg(p(x) \wedge q(x))$ which is classically equivalent to the premiss $\forall x.\Box(p(x) \wedge q(x))$: the LoI connecting p, q and the outloop represents the universally quantified variable x, while the dashed inloop represents necessity. WP4 will explore the precise inference rules governing these constructs, trying to accomodate the partial descriptions in Peirce's writings to the modern CHC conception of SCROLLNETS. It is expected that LoI can express *dependent* types and *identity* types, while broken cuts could capture either type-theoretic *modalities* or type-theoretic *universes* (or both), thus contributing greatly to KO1. WP4 will also be essential to reach the necessary expressive power to simulate the *calculus of inductive constructions* — the type theory underlying the leading proof assistants Rocq and Lean — and thus situate scroll nets as a realistic foundation for ITPs.

Interdisciplinarity By incorporating the CHC at the heart of its methodology, SCROLLNETS is by its very nature interdisciplinary, placing itself at the crossroad of **mathematical logic** and **programming language theory**. Although not the focus of this project, the long-term vision of exploiting scroll nets as a medium for powerful and intuitive GUIs in ITPs warrants future intersections with the field of **human-computer interaction** (HCI). Through its dealing with the very foundations of the notion of formal proof, SCROLLNETS also exhibits a strong **philosophical** flavor, which will be technically realized through its systematic hermeneutics of the original writings of C. S. Peirce on EGs. Peirce was probably one of the last polymathic genius in the history of western science, and his broad holistic vision of logic as the formal investigation of the principles of scientific inquiry certainly influences the ER's own vision, putting SCROLLNETS in the realm of bordering areas of philosophy like *epistemology*, *semiotics* and *metaphysics*.

[21] Minghui Ma and Ahti-Veikko Pietarinen, "Gamma Graph Calculi for Modal Logics", *Synthese* vol. 195, no. 8, Aug. 2018, https://doi.org/10.1007/s11229-017-1390-3, pp. 3621–50.

Gender Not applicable, because the research of ScrollNets is of an abstract and theoretical nature.

Open science and research data management All the results of ScrollNets will be made available as arXiv pre-prints, with the aim of encouraging informal evaluation from the scientific community. Moreover, the ER will (co-)organise a workshop to communicate results and encourage feedback from other researchers (Sec. 2.2). The project deliverables will be published in the proceedings of high-rated and peer-reviewed conferences and in scientific journals (Sec. 2.2). Proceeding publications will be made available on arXiv, and journal contributions will be published in Open Access format, for which funding is foreseen. ScrollNets does not envisage the collection of any kind of data, and eventual software prototypes experimenting with an implementation of scroll nets will all be open-sourced.

1.3 Quality of the supervision, training and of the two-way transfer of knowledge between the researcher and the host

Quality of the supervision The project will be supervised by Anupam Das, associate professor at the School of Computer Science of the University of Birmingham (UoB) in the Theory of Computation (ToC) group. Prof. Das is a leading expert in proof theory, who is nowadays particularly active in the area of cyclic proofs for fixpoint logics (WP3). He has a strong background in deep inference, linear logic and their applications to complexity theory, and has also made multiple contributions to the study of intuitionistic modal logics (WP4). As one of the ER's PhD thesis reviewers, he possesses a profound understanding of the theoretical and practical dimensions of ScrollNets. His extensive background in deep inference and proof theory enables him to critically assess both the innovativeness and robustness of the proposed framework.

Prof. Das has an excellent record of almost 60 publications in top-tier journals (LMCS, JAR) and peer-reviewed conference proceedings (LICS, CSL, FSCD, IJCAR, TABLEAUX) in logic, theoretical computer science and automated theorem proving. He also has a good track record in mentoring young researchers: he co-supervised 2 Ph.D. students with Prof. Escardo and Prof. Paul Levy — with whom the ER expects collaborations on WP4 and WP5 — and supervised 5 postdocs thanks to the funding that he obtained as a recipient of the UKRI Future Leaders Fellowship *Structure vs. Invariants in Proofs* (2020–2024, renewed for 2024–2027). He was himself an MSCA postdoctoral fellow from 2017 to 2019.

Training The ER's overarching career goal is to secure a computer science professorship in Europe. In the medium term, he aspires to obtain an unsupervised temporary position and funding by an ERC starting grant. The acquisition of a prestigious MSCA grant would significantly enhance his prospects. The proposed training program is structured into three Training Objectives:

TO1. **Gaining scientific knowledge:** during his tenure at the host institution, the ER will expand his scientific horizon by immersing himself in the English school of proof theory, the historical centre for the development of the deep inference methodology. Here, he will gain further knowledge of advanced SOTA topics such as cyclic proofs, intuitionistic modal logics and homotopy type theory. At least weekly meetings with his supervisor will serve as forums to assess project progress, explore scientific inquiries, and exchange innovative ideas. The ER will also actively participate in the ToC's weekly seminar series, featuring speakers from renowned global research institutions.

TO2. **Enhance management, leadership and grant writing skills:** the ER will participate in several management and leadership skills courses offered by UoB's People and Organization Development (POD) division, including Research Team Leader, Effective Financial Management, and other programs on Health & Safety in the Workplace, Ethics & Governance in Research, Scientific Communication, Public Engagement & Dissemination, and Personal Effectiveness. The ER will also attend the POD Grant Writing workshop. These skills will enrich the ER's ability to adapt to changes and undertake a variety of activities to support his high-level interdisciplinary research capability.

TO3. **Enhance supervision and teaching skills:** the ER will actively engage in mentoring the supervisor's students, providing individual guidance on their research projects, and offering courses in specialised subjects such as structural proof theory and interactive theorem proving. He will also take on responsibilities such as crafting research internship proposals and overseeing interns during 2-3 month periods of study.

Applicant-to-host transfer of knowledge The project will greatly benefit from the combined expertise of several leading researchers at ToC. For WP2, the ER will collaborate with Dr. Shillito, a postdoctoral fellow with internationally recognized expertise in the syntax and semantics of bi-intuitionistic logic. For WP4, the ER will also collaborate with Dr. Marin and Prof. Escardo, eminent specialists in modal logics and dependent types/homotopy type theory/ITPs, respectively. For the foundational work in WP1, the ER may collaborate with Prof. Ghica, who has been applying graphical formalisms to model computations for several decades in both academia and industry.

Applicant-to-host transfer of knowledge The ER will bring to ToC his worldwide unique expertise on EGs and their proof theory, as well as the application of deep inference and graphical proof theory to interactive theorem proving. He will share his knowledge through one-to-one interactions with ToC members and students, by speaking at seminars, by supervising Master projects and by (co-)organising a workshop on ScrollNets topics (Sec. 2.2).

1.4 Quality and appropriateness of the researcher's professional experience, competences and skills

The ER is an internationally recognised expert in proof theory and interactive theorem proving. His PhD thesis, defended in May 2024, revolves around the design and implementation of novel proof systems that enable the construction of formal proofs through direct manipulation in a GUI. In particular, Chapters 9 and 10 provide a deep 100 pages analysis of the proof theory of EGs both in propositional/first-order and intuitionistic/classical logic, and describe a prototype of GUI for ITPs based on this theory called Flower Prover, which is publicly accessible and usable online[22]. Thus the ScrollNets project constitutes a direct continuation and substantial extension of the ER's doctoral research and benefits from his personal interdisciplinary background in computer science, mathematics and philosophy. Indeed, although the ER has been mainly trained in computer science during his studies, he also attended the 1st year of the Université Paris 1's master in Logic and Philosophy of Science (LOPHISC). After finishing his PhD, the ER has secured a 1-year postdoctoral position at the Grothendieck Institute, working with Olivia Caramello and Fields medalist Laurent Lafforgue on the formalization of topos theory in the Lean proof assistant, thus broadening significantly his mathematical knowledge. Topos theory also has well-known applications to the semantics of higher-order and dependent type theories which have been investigated by researchers of ToC like Steve Vickers, making this acquired knowledge relevant to WP4 of ScrollNets. The ER will start on October 1 a new postdoctoral position in the D3S laboratory at Charles University in Prague, under the supervision of Dr. Tomas Petricek. An assistant professor specializing in programming systems and the history/philosophy of computing, Dr. Petricek's research has a strong focus on *end-user* programming systems and includes publications in the field of human-computer interaction (HCI). This position will allow the ER to expand his international network and immerse himself in a new research community with a more applied perspective, an experience that aligns perfectly with the long-term interdisciplinary goal of ScrollNets to make ITPs more accessible to end-users.

The ER has proven his potential to carry out interesting and impactful research witnessed by two publications at top-tier conferences (CPP, FSCD), as well as his strong independence by being the sole author of his second article. He is an experienced speaker, having delivered 4 conference talks, 4 workshop talks, and 6 invited seminar talks to date. Moreover, he has been invited by Ahti-Veikko Pietarinen — one of the most prolific Peirce scholars in the world with an h-index of 35 — to contribute a chapter to the forthcoming book *Peirce's Philosophy of Notation* in the Peirceana series[23], demonstrating recognition of his interdisciplinary and international expertise on EGs. The ER has been involved in teaching during every year of his PhD: he taught various courses on programming languages at undergraduate and graduate levels, both at Université Paris 7 and École Polytechnique. This involved teaching classes to groups of 50 students and performing duties such as exam grading, project review and practical sessions mentoring.

2 Impact #@IMP-ACT-IA@#

2.1 Credibility of the measures to enhance the career perspectives and employability of the researcher and contribution to his/her skills development

The MSCA fellowship is a crucial step towards the ER's long-term goal of securing a professorship in Europe. It will directly support his medium-term ambition of obtaining an ERC starting grant by providing the ideal environment to ma-

[22] Donato, Pablo. flower-prover. Oct. 2023. github.com/Champitoad/flower-prover. Accessed 8 Dec. 2023.
[23] https://www.amazon.fr/Peirces-Philosophy-of-Notation/dp/3110649500

ture his research programme on scroll nets from a promising initial discovery into a cornerstone of next-generation ITPs. The project will significantly enhance his academic track record through high-impact publications and presentations at top-tier venues, demonstrating his capacity for independent and groundbreaking research.

The fellowship at UoB offers unparalleled networking opportunities. The ER will be integrated into the vibrant ToC group, fostering daily interactions and collaborations with his supervisor and its members, whose expertise is vital for the success of all five work packages (see Sec. 1.3). More generally, the UK is known to be one of the epicenters for research in proof theory and programming language theory, with leading researchers in these two fields at top universities; this includes the *Mathematical foundations of computation* group at University of Bath, the *Programming Principles, Logic, and Verification* group at University College London, and the *Programming, Logic, and Semantics* group at University of Cambridge. This strategic positioning will expand the ER collaborative network, solidifying his standing in the international community and paving the way for future joint projects. The outcomes of ScrollNets, disseminated through open-access publications, pre-prints, and a dedicated workshop (Sec. 2.2), will cement the ER's reputation as a leader in the field, boosting his employability and career prospects.

2.2 Suitability and quality of the measures to maximise expected outcomes and impacts, as set out in the dissemination and exploitation plan, including communication activities #@COM-DIS-VIS-CDV@#

Scientific events The results of the ScrollNets project are planned to be published in high-impact journals such as LMCS and TCS, and in the proceedings of conferences like LICS, CSL, FSCD, FroCoS, TABLEAUX and DIAGRAMS. All of these are international top-tier venues focusing on logical topics in computer science, to the exception of DIAGRAMS which is interdisciplinary and open to all fields that study diagrammatic notations, including mathematics, cognitive science, psychology, philosophy and linguistics. DIAGRAMS 2026 will be hosted by Pawel Sobocinski's group in Tallinn, internationally renowned for their expertise in string diagrams, with Francesco Bellucci — co-editor with Pietarinen of the Peirceana book series (see Sec. 1.4) — as program chair. FroCoS is also specifically interested in frameworks that can combine multiple logics and thus particularly relevant to ScrollNets. Additionally, the ER will report about the status of the ScrollNets project frequently at international workshops like LFMTP or TYPES. He will propose to co-organize with colleagues Dr. Haydon (expert in EGs) and Dr. Di Giorgio (expert in string diagrams) a new "Graphical Logic Workshop" (GLW) affiliated with a major conference, filling the absence of a federated community of researchers on ScrollNets topics. All these measures will enable a wide range of possible future research to be conducted by contributors, external collaborators, and independent research groups.

Public communication As the ultimate goal of ScrollNets is to propose a new notation for logic and programming that is more accessible to non-experts, the ER will undertake multiple initiatives to engage audiences outside of academia. A personal blog dedicated to scroll nets will be created to explain the basic principles of the formalism, assuming little to no background in logic and programming. This will serve as a direct test for the accessibility and intuitiveness of the notation, and may include interactive animations in the web browser inspired by the popular online learning platform Brilliant.org, whose slogan "Learn by doing" fits nicely with the ER's Proof-by-Action paradigm. To reach a more established audience, the ER will also contribute to Prof. Anupam Das's existing proof theory blog[24]. Furthermore, a YouTube channel may be launched to explore the concepts of visual logic and programming, leveraging the video format to provide dynamic and engaging explanations. Finally, the ER will actively participate in science popularization events such as *The Big Bang Fair*[25] in Birmingham and *Computer Science in Action* in London[26], presenting the project's ideas to students, teachers, and the general public to inspire the next generation of computer scientists.

2.3 The magnitude and importance of the project's contribution to the expected scientific, societal and economic impacts

The core vision of ScrollNets is to make formal reasoning more accessible. If successful, its impact will extend far beyond the project's immediate scope, transforming domains where rigorous verification is critical but currently hindered by the steep learning curve of ITPs.

[24] https://prooftheory.blog/about-the-proof-theory-blog/
[25] https://www.thebigbang.org.uk/
[26] https://educationinaction.org.uk/study-day/computer-science-in-action-27-11-2024/

Scientific/Societal Impact in Mathematics Education: ScrollNets will provide a "no-code" platform for students to interactively explore mathematical concepts. The diagrammatic nature of scroll nets offers a more intuitive way to grasp abstract proofs than traditional symbolic logic, fostering deeper understanding and engagement[27]. This could democratize access to advanced mathematics and computer science, benefiting students and educators from secondary to higher education by providing a collaborative and visual learning medium.

Economic/Technological Impact in Formal Verification: By lowering the barrier to entry, ScrollNets will enable wider adoption of formal methods in industry. The PbA paradigm will allow domain experts (e.g., engineers, systems architects) to directly participate in the verification process without extensive training in ITPs. This will reduce costs and development time while increasing the reliability of safety-critical systems in sectors like aerospace, automotive, and healthcare, leading to significant economic and safety benefits.

Scientific/Technological Impact in AI Safety: ScrollNets will contribute to the development of more reliable neurosymbolic AI systems. By providing a transparent and verifiable logical reasoning component, scroll nets can complement the probabilistic nature of LLMs, mitigating the risk of "hallucinations" and ensuring that AI-driven scientific discovery is grounded in rigorous, auditable proof. This enhances the trustworthiness of AI systems in high-stakes research and decision-making.

#§COM-DIS-VIS-CDV§# #§IMP-ACT-IA§#

3 *Quality and Efficiency of the Implementation* #@QUA-LIT-QL@# #@WRK-PLA-WP@# #@CON-SOR-CS@# #@PRJ-MGT-PM@#

3.1 *Quality and effectiveness of the work plan, assessment of risks and appropriateness of the effort assigned to work packages*

The project is structured into four technical **work packages** (WP1-WP4) to be completed over the 24-month fellowship. The work plan detailed in Fig. 3 is designed to front-load the foundational theoretical work in the first year, allowing the second year to focus on extensions, applications, and dissemination. Each technical work package has been divided into several **deliverables**, corresponding to parts of the development of ScrollNets that have potential for publication as individual conference articles. An additional deliverable (D11) will be the creation of the project website/blog for public communication. **Key milestones** with regard to applications to ITPs are the completion of the foundational theory (M1), the successful extension to fixpoint logics (M2), and the development of the theory for dependent types (M3), corresponding respectively to WP1, WP3.a and WP4.a. **Potential risks** to the project have been identified and mitigation strategies are in place to ensure its successful completion (Table 1). Notably, the ER does not expect to realistically achieve the writing of 10 papers (deliverables D1 to D10) in 2 years. Rather, this should be considered as a strategy to secure multiple independent avenues for research, where focus on deliverables marked as *optional* can be released in case of roadblocks or failures. Several deliverables in the same work package might also be combined into a single long journal paper. Regular meetings with the supervisor will allow for continuous risk assessment.

Table 1: Risk Assessment and Mitigation Plan

Risk	Mitigation Strategy	Severity
R1: Foundational theory in WP1 (normalization/sequentialization) proves more complex than anticipated, delaying subsequent WPs.	Allocate more time for WP1. If major issues arise, consult with external experts in graphical proof theory, such as Dr. Heijltjes.	Medium
R2: The proposed extensions in WP2-WP3 do not yield sound and complete systems or fail to extend the core meta-theorems.	The expertise of the supervisor (cyclic proofs) and collaborators (modal/bi-intuitionistic logic) will be leveraged. If a specific extension fails, focus will shift to the more promising ones.	Medium
R3: Failure to extend the theory to dependent types in WP4.	Intensify collaboration with Prof. Escardo, an expert in dependent types. If significant roadblocks appear, focus will shift to the less speculative modal logic aspects of WP4.	Medium

[27] Minh, Frédéric Tran, et al. *Research Report - Proof Assistants for Teaching: A Survey*. Apr. 2024. Accessed 4 Sept. 2025.

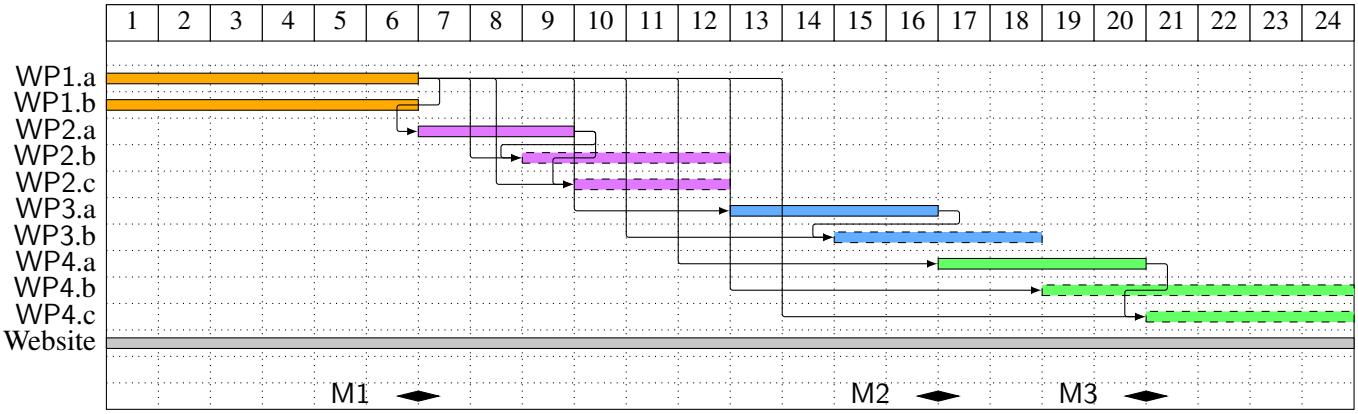

Tasks	*Description*	*Deliv.*	*Month*
WP1.a	Sequentialization for minimal implicative logic	D1	6
WP1.b	Normalization for minimal implicative logic	D2	6
WP2.a	Extension to intuitionistic propositional logic with $(n,1)$-scrolls	D3	9
WP2.b	Extension to bi-intuitionistic propositional logic with (n,m)-scrolls	D4o	12
WP2.c	Equational theory of classical proofs through topology of rules	D5o	15
WP3.a	Extension to least fixpoints of propositions	D6	16
WP3.b	Extension to least+greatest fixpoints of propositions	D7o	18
WP4.a	Extension to first-order predicate logic (Beta)	D8	20
WP4.b	Extension to the intuitionistic modal cube	D9o	22
WP4.c	Extension to higher-order logic and dependent types (Gamma)	D10o	24

Figure 3: **Above:** Gantt chart summarising the work plan of SCROLLNETS. **Below:** tasks and associated deliverables. Deliverables marked with the letter o (drawn with a dashed contour) are considered optional.

3.2 Quality and capacity of the host institutions and participating organisations, including hosting arrangements

3.2.1 Quality and capacity of the host institution

The University of Birmingham (UoB) provides an ideal environment for SCROLLNETS, being a leading research institution ranked 76th globally in the 2025 QS World University Rankings. Its Theory of Computation (ToC) group is a world-renowned centre for theoretical computer science, featuring prominent researchers like Paul Blain Levy (2025 Alonzo Church awardee), Martin Escardo, and the supervisor, Anupam Das. The university's robust infrastructure and demonstrated success in hosting MSCA Fellows (see Part B-2, Section 5) ensure comprehensive support for the project. UoB's administrative services, including a dedicated Horizon Europe support team, will manage all financial and contractual aspects, from the Grant Agreement to final reporting, allowing the ER to focus on research. The project will adhere to the European Code of Conduct for Research Integrity, with clear protocols for scientific conduct and ethics overseen by the supervisor.

3.2.2 Hosting arrangements

The ER will be fully integrated as an employee at UoB, benefiting from its established support system for MSCA Fellows. This includes access to university services, health and safety resources, and professional development opportunities through the People and Organisational Development (POD) and the Centre for Learning and Academic Development (CLAD). The ER's professional growth will be supported by Personal Development Reviews (PDRs), ensuring alignment with career objectives. UoB is committed to upholding the principles of the European Charter for Researchers and the HR Excellence in Research Award. Hosted within the ToC group, the ER will join a dynamic community of over 40 researchers, including faculty, postdoctoral fellows, and PhD students. This environment will foster intellectual exchange and collaboration. The School of Computer Science will provide all necessary resources, including dedicated office space, high-performance computing, and full access to digital libraries and scientific publications from all major publishers.

#§CON-SOR-CS§# #§PRJ-MGT-PM§# #§QUA-LIT-QL§# #§WRK-PLA-WP§#

Part B-2

4 CV of the researcher

Email: pablo.donato@tuta.io.
Webpage: https://pablogician.refl.fr/.
GitHub: https://github.com/Champitoad.
LinkedIn: https://www.linkedin.com/in/pablo-donato-065665109/.

4.1 Professional experience

Starting 01/10/2025 **Post-doctoral researcher**, *Scroll nets for end-user programming*, D3S laboratory, Charles University, Prague, Czechia.
Supervisor: Tomas Petricek.
Project: The ER will work on the design of user interfaces for proof assistants in educational settings, as well as explore the suitability of scroll nets as a rigorous foundation for end-user programming systems.

01/07/2024 – 01/07/2025 **Post-doctoral researcher**, *Formalization of topos theory*, Grothendieck Institute, Paris, France.
Supervisor: Olivia Caramello.
Project: The ER worked on the formalization of topos theory in the Lean proof assistant, in collaboration with mathematician Olivia Caramello and Fields medalist Laurent Lafforgue.

01/06/2018 – 01/09/2018 **Software development intern**, *C#/XAML for HTML5*, Userware, Paris, France.

4.2 Education

01/10/2020 – 01/03/2024 **Ph.D. in Computer Science**, *Deep Inference for Graphical Theorem Proving*, Institut Polytechnique de Paris, Palaiseau, France.
Advisor: Benjamin Werner.
Co-advisor: Pierre-Yves Strub.
Subject: The ER researched novel ways to interact with proof assistants through graphical interfaces. More precisely, he designed direct manipulation principles for constructing proofs incrementally by executing gestures on logical statements. His methodology was based on the exploration and application of techniques from a branch of structural proof theory called deep inference .

01/09/2018 – 01/09/2020 **M.Sc. in Computer Science**, *MPRI (Master Parisien de Recherche en Informatique)*, Université de Paris, Paris, France.

01/09/2016 – 01/09/2017 **B.Sc. in Computer Science**, *Licence Informatique*, Université Pierre et Marie Curie, Paris, France.

4.3 Research Interests

The ER's work currently lies at the intersection between mathematical logic, programming language theory and human-computer interaction, with applications to interactive theorem proving. He tries to design graphical representations of logical theories that are better suited to direct manipulation by humans, but still understandable by computers. A central aspect of his methodology is the Curry-Howard correspondence between proofs and programs, which uncovers a deep link between the notions of sound deduction and

correct computation. This has led him to explore specific areas such as structural proof theory, type theory and category theory.

4.4 Preprints

July 2025 Pablo Donato, *Scroll nets*, Submitted at CSL 2026, Paris, France.

September 2022 Kaustuv Chaudhuri, Pablo Donato, Luigi Massacci and Benjamin Werner, *Certifying Proof-by-Linking*, HAL online archive.

4.5 Conference Publications

July 2024 Pablo Donato, *The Flower Calculus*, FSCD 2024, Tallinn, Estonia.

January 2022 Pablo Donato, Pierre-Yves Strub, Benjamin Werner, *A drag-and-drop proof tactic*, CPP 2022, New York, USA.

4.6 Extended Abstracts

June 2022 Pablo Donato, Pierre-Yves Strub, Benjamin Werner, *Actema : une interface graphique et gestuelle pour preuves formelles (démonstration)*, JFLA 2022, Saint-Médard-d'Excideuil, France.

4.7 Contributed Talks

April 2024 Pablo Donato, *The Flower Calculus*, SYCO 12, Birmingham, UK.

January 2023 Pablo Donato, Benjamin Werner, *Integrating graphical proofs in Coq*, CoqPL 2023, Boston, USA.

16/02/2023 Pablo Donato, Benjamin Werner, *Compiling gestural actions with deep inference*, Journées d'hiver 2022-23 du GT Scalp, Marseille, France.

June 2022 Pablo Donato, Pierre-Yves Strub, Benjamin Werner, *Actema : une interface graphique et gestuelle pour preuves formelles (démonstration)*, JFLA 2022, Saint-Médard-d'Excideuil, France.

June 2021 Pablo Donato, Pierre-Yves Strub, Benjamin Werner, *A drag-and-drop proof tactic*, TYPES 2021, Online.

4.8 Invited Talks

10/06/2025 Pablo Donato, *Deep Inference for Graphical Theorem Proving*, D3S seminar, Prague, Czechia.

20/05/2025 Pablo Donato, *The Flower Calculus*, Itaca Fest webinar, Online.

January 2025 Pablo Donato, *The Flower Calculus*, AMS Special Session on Methods of Compassionate Math II, JMM 2025, Seattle, USA.

April 2024 Pablo Donato, *Deep Inference for Graphical Theorem Proving*, Theory of Computation seminar, Birmingham, UK.

22/05/2023 Pablo Donato, *Deep Inference for Graphical Theorem Proving*, Formath seminar, Paris, France.

30/05/2022 Pablo Donato, *Interactive Deep Reasoning*, PARTOUT seminar, Palaiseau, France.

4.9 Projects

2023 – Present **Software prototype**, *Flower Prover*, .
Description: The ER built in Elm the Flower Prover, a prototype of GUI in the Proof-by-Action paradigm based on the Flower Calculus. It is a mobile-friendly structural editor based on a modal interface, a bit like the vim text editor: proofs are built in Proof mode, edited in Edit mode, and (can soon be) navigated in Navigation mode .
Try it!: https://pablogician.refl.fr/flowerprover/index.html.
GitHub: https://github.com/Champitoad/flower-prover.

2022 – Present **Software prototype**, *coq-actema*, .
Description: coq-actema is a system that integrates the interface of Actema in the Rocq proof assistant as an interactive proof view. Actema is packaged as an Electron application that receives goals from Rocq over HTTP, and sends back graphical actions to a Rocq plugin that compiles them into proof terms .
Talk: https://youtu.be/X-VAE_keUJ0.
GitHub: https://github.com/Champitoad/coq-actema.

2020 – 2022 **Software prototype**, *Actema*, .
Description: Actema is a prototype of GUI for interactive theorem proving by direct manipulation of formulas in goals. Its development was started by Pierre-Yves Strub and Benjamin Werner in 2019. The ER contributed many new features during his Master's thesis, and took over most of its development during his PhD thesis .
Try it!: http://www.actema.xyz/.
Frontend: https://github.com/dualbox/proverInterface.
Backend: https://gitlab.com/prover-ui/prover.

4.10 Teaching

01/09/2021 – 01/09/2023 **Teaching assistant**, *Mechanisms of Object-Oriented Programming (Graduate)*, École Polytechnique, Palaiseau, France.

01/09/2021 – 01/09/2023 **Teaching assistant**, *Introduction to Web Programming (Undergraduate)*, École Polytechnique, Palaiseau, France.

01/09/2020 – 01/09/2021 **Teaching assistant**, *Introduction to Object-Oriented Programming in Java (Undergraduate)*, Université de Paris, Paris, France.

01/09/2020 – 01/09/2021 **Teaching assistant**, *Introduction to Programming in Python (Undergraduate)*, Université de Paris, Paris, France.

5 Capacity of the Participating Organisation(s)

5.1 Template table: Overview of Participating Organisations

Organisation Role	PIC	Legal Entity Short Name	Academic Organisation (Y/N)	Country	Name of Supervisor
Beneficiary	999907526	UoB	Y	United Kingdom	Assoc. Prof. Anupam Das

5.2 Template table: Capacity of the Participating Organisations

[Role] Beneficiary	
[Full name + Legal Entity Short Name + Country] The University of Birmingham (UoB), United Kingdom	
General description	Founded in 1900, the University of Birmingham is one of the leading research-based universities in the United Kingdom; the breadth of research expertise is a distinctive characteristic of the University of Birmingham. The last UK Research Excellence Framework 2021, confirmed that 92.5% of the University's research has global reach, meaning it is recognised internationally in terms of its originality, significance, and rigour. The University of Birmingham is 76th in the 2025 QS World University Rankings, cementing our position in the top 100 universities globally and placing us 14th out of the 24 Russell Group universities to feature in the ranking. The School of Computer Science at UoB holds an Athena SWAN Award for the good employment practice in the recruitment, retention and progression of female academics in STEM and as such appropriate gender considerations will be ensured during the timeframe of SCROLLNETS. The ER will work within the University of Birmingham Theory of Computation group, at the School of Computer Science in Birmingham. The Theory of Computation group hosts 20 permanent researchers, including 4 emeriti, 8 postdoctoral researchers, 8 honorary researchers, and 20 PhD students, specialised in topics foundational to computer science like logic, proof theory, type theory, automata theory and proof assistants.
Role and profile of supervisor	The supervisor, Anupam Das, is a leading international proof theorist and, in particular, an expert on cyclic proof theory. He founded the proof theory group at the University of Birmingham, where his group is funded by a £2.2million UKRI grant. He has an outstanding publication record, with a consistent track record of publications in top-tier conferences and journals. A total of 5 PhD students are supervised by the supervisor, with 1 who has already completed. He has supervised 4 postdocs in the past, all of whom have progressed to higher posts. He has also held a Marie Sklodowska-Curie fellowship in the past (2017-19) and so is well placed to act as a mentor and advisor to the ER.
Key research facilities, infrastructure and equipment	The University of Birmingham commits to providing to the ER the full standard research support required: access to an office and appropriate workstation, Human Resources, Information Technology and library services. The ER's office space will be in the Y9 building of the School of Computer Science of the University of Birmingham, where all members of the Theory group are located.
Previous and current involvement in EU-funded research and training programmes/actions/projects	The University of Birmingham has extensive experience of EU collaboration and partner- ships, and in-depth expertise of Framework Programme matters including management, reporting, and auditing. The University has been involved in 315 FP7 projects, 358 projects in H2020 and 128 projects in Horizon Europe, including projects in negotiation; it is ranked 18th for project participation amongst Universities in FP7, according to the Commission's final FP7 monitoring report (2015). Within this, UoB has been involved in:

	FP7	H2020 (as of Dec 2021)	Horizon Europe (Jun 2025)
Collaborative projects	112 (24 as lead)	126 (31 as lead)	73(2 as lead)
MSC ITN/DN	31 (19 as lead)	35 (14 as lead)	14 (1 as lead)
MSC Fellowship	82	129	44
ERC	17 (14 as lead)	46 (38 as lead)	17 (14 as lead)
Other	73	22 (8 as lead)	6

6 Additional ethics information

All relevant ethics information has been provided in Part A of the proposal. No further details are necessary.

7 Additional information on security screening

The SCROLLNETS project does not involve any security-sensitive research. Therefore, no additional information on security screening is required.

8 Environmental considerations in light of MSCA Green Charter

The SCROLLNETS project is committed to sustainable research practices in line with the MSCA Green Charter and the University of Birmingham's sustainability policies. As a primarily theoretical project without any generative AI components, its environmental footprint is inherently low. Nevertheless, specific measures will be taken to minimize environmental impact throughout the project's lifecycle.

All research outputs, including publications and software prototypes, will be disseminated digitally via open-access journals, pre-print servers like arXiv, and the project website, eliminating the need for printed materials. For collaboration and dissemination events, virtual participation will be prioritized. When travel is essential for conferences or meetings, low-carbon transport options, such as rail, will be chosen whenever feasible. The computational work will be conducted on the energy-efficient computing infrastructure provided by the University of Birmingham. These actions ensure that the project not only advances scientific knowledge but does so in a socially and environmentally responsible manner.

9 Required for Global Fellowships only: Letter(s) of commitment from associated partners (hosting of the outgoing phase)

This proposal is submitted for a European Fellowship and, as such, does not require a letter of commitment for an outgoing phase, as this is not a Global Fellowship.

10 Disclaimer on the use of generative AI for the preparation of the proposal

The following generative AI technologies have been used in the preparation of this proposal:

- Chatbots like OpenAI's ChatGPT and Mistral's Le Chat as search engines, including the use of the Deep Search functionality. No output from these chatbots has been copy-pasted, and proposed sources were rigorously checked manually for scientific integrity before integration as references in the proposal's footnotes.
- The GitHub Copilot Agent feature of Visual Studio Code loaded with models GPT5 and Gemini 2.5 Pro, as a tool for assistance in writing. More specifically, it was prompted for summarization and reflowing of sentences/paragraphs. When used for idea suggestion, output has been rigorously checked for factuality and alignment with the author's original intent and beliefs.

The author claims full responsibility for everything written in this proposal, including eventual copyright infringements that might have escaped his scrutiny.

European Commission

FUNDING & TENDERS PORTAL E-RECEIPT

Digitally sealed by the European Commission
Date: 2025.09.11 00:48:38 CEST
Reason: Acknowledgement of Receipt

This electronic receipt is a digitally signed version of the document submitted by your organisation. Both the content of the document and a set of metadata have been digitally sealed.

This digital signature mechanism, using a public-private key pair mechanism, uniquely binds this eReceipt to the modules of the Funding & Tenders Portal of the European Commission, to the transaction for which it was generated and ensures its full integrity. Therefore a complete digitally signed trail of the transaction is available both for your organisation and for the issuer of the eReceipt.

Any attempt to modify the content will lead to a break of the integrity of the electronic signature, which can be verified at any time by clicking on the eReceipt validation symbol.

More info about eReceipts can be found in the FAQ page of the Funding & Tenders Portal.

(https://ec.europa.eu/info/funding-tenders/opportunities/portal/screen/support/faq)