Ankit Soni

Lab_3_day_3

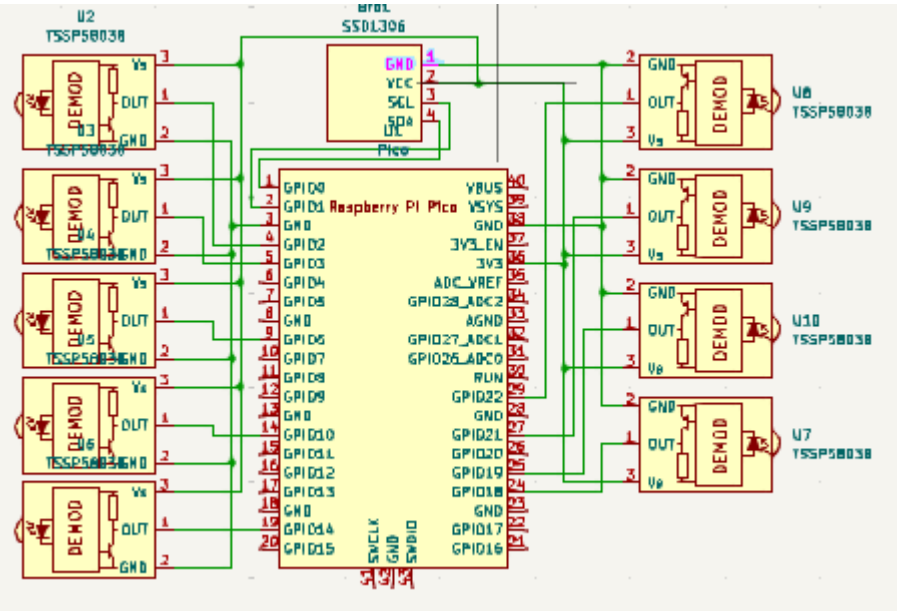

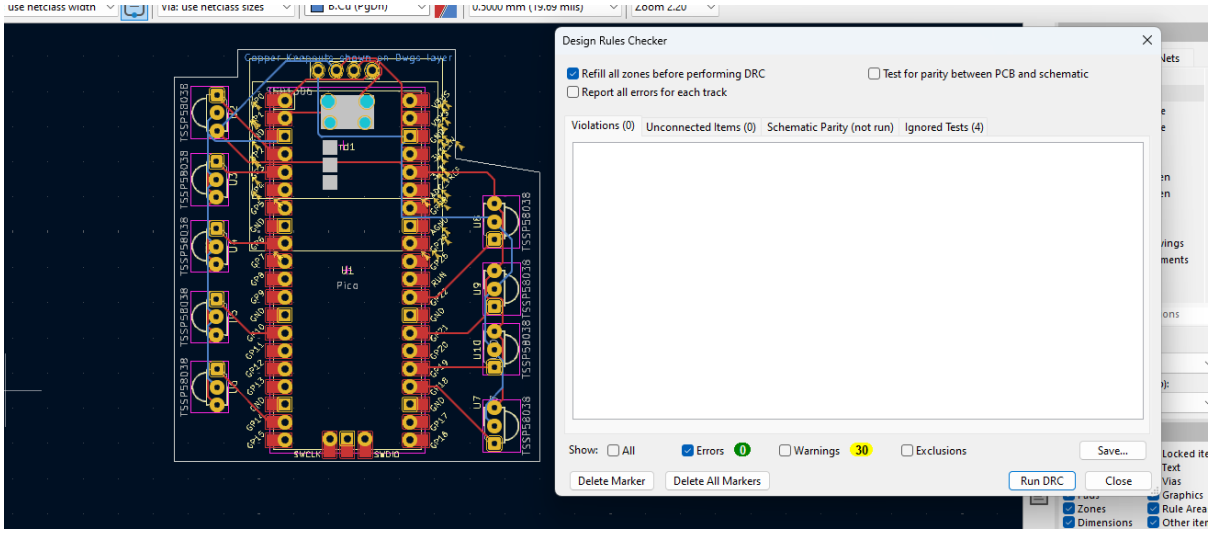

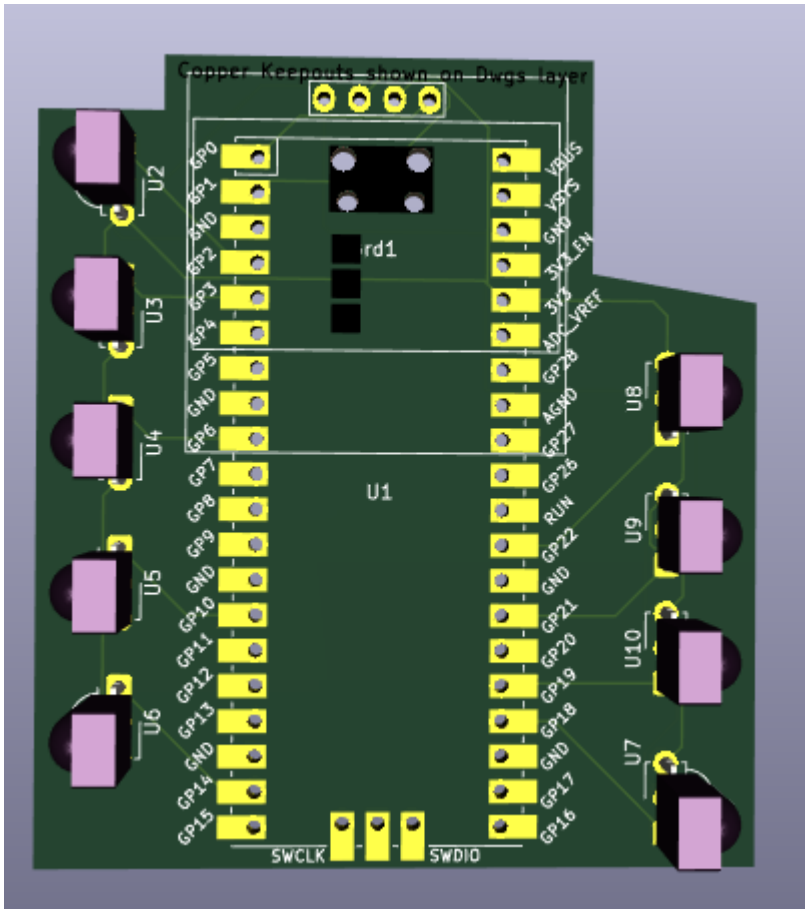
Copper Keepouts shown on Dwgs layer
U1
U2
U3
U4
U5
U6
U7
U8
U9
U10
rd1
GP0
GP1
GND
GP2
GP3
GP4
GP5
GND
GP6
GP7
GP8
GP9
GND
GP10
GP11
GP12
GP13
GND
GP14
GP15
VBUS
VSYS
GND
3V3_EN
3V3
ADC_VREF
GP28
AGND
GP27
GP26
RUN
GP22
GND
GP21
GP20
GP19
GP18
GND
GP17
GP16
SWCLK
SWDIO