AUTONOMOUS DATA FERRYING FROM A SELF-ORGANIZING/HEALING WSN IN DISCONNECTED ZONES

25-26J-010

Problem Statement & Stakeholders

Context

Remote environmental monitoring in disconnected zones (forests, disaster areas, rural regions).

Stakeholders

- **Primary users:** Environmental researchers, disaster response teams
- **Secondary users:** Agricultural planners, biodiversity analysts
- **Decision makers:** Government agencies, NGOs, defense operations

Observed Issue

- No permanent communication infrastructure
- High energy consumption in traditional WSNs
- Data loss during CH failure or unstable UAV contact
- Vulnerability to compromised nodes

Why It Matters

- Missed data windows = compromised decision-making
- Battery replacement impractical in remote areas
- Network lifetime directly impacts deployment feasibility

Research Gap & Objectives

Gap Identified

No integrated framework combining:

- Trust-aware multi-metric CH election with provable stability and fairness
- Persistent storage
- BLE-based low-power detection
- UAV-assisted ferrying

Main Objective

Design and implement a fully integrated, secure, energy-efficient, UAV-assisted WSN capable of autonomous operation (>12 months target node lifetime) in disconnected zones with lossless data delivery and validated clustering fairness via STELLAR multi-metric, trust-aware CH election

Proposed Solution Overview

Solution Summary

A self-organizing, trust-aware, energy-efficient wireless sensor network with UAV-assisted data ferrying and persistent data integrity for disconnected environments.

Key Features Delivered

- **FR1:** Autonomous cluster formation & CH election via STELLAR (multi-metric, trust-aware, Lyapunov-stable CH selection)
- **FR2:** Ultra-low-power intra-cluster communication (BLE + ESP-NOW split plane)
- **FR3:** UAV-assisted data ferrying with secure Wi-Fi/HTTP transfer
- **FR4:** Persistent JSON storage in SPIFFS (survives CH failure)
- **FR5:** On-node compression benchmarking for testing (Huffman vs miniz)

FR = Functional Requirement

Proposed Solution Overview

Non-Functional Focus

- Energy Efficiency (deep sleep, TDMA scheduling)
- Security (HMAC-SHA256 BLE advertisements)
- Reliability (acknowledgement-based Wi-Fi transfer)
- Scalability (cluster-based architecture)
- Fault tolerance (self-healing CH re-election driven by STELLAR: trust/link thresholds, CH beacon timeout, phase-gated re-election).

Current Completion Status

- All four components integrated
- Live testing completed
- Evaluation results collected
- ~90-95% completion
- System maturity achieved → Evaluation phase ongoing

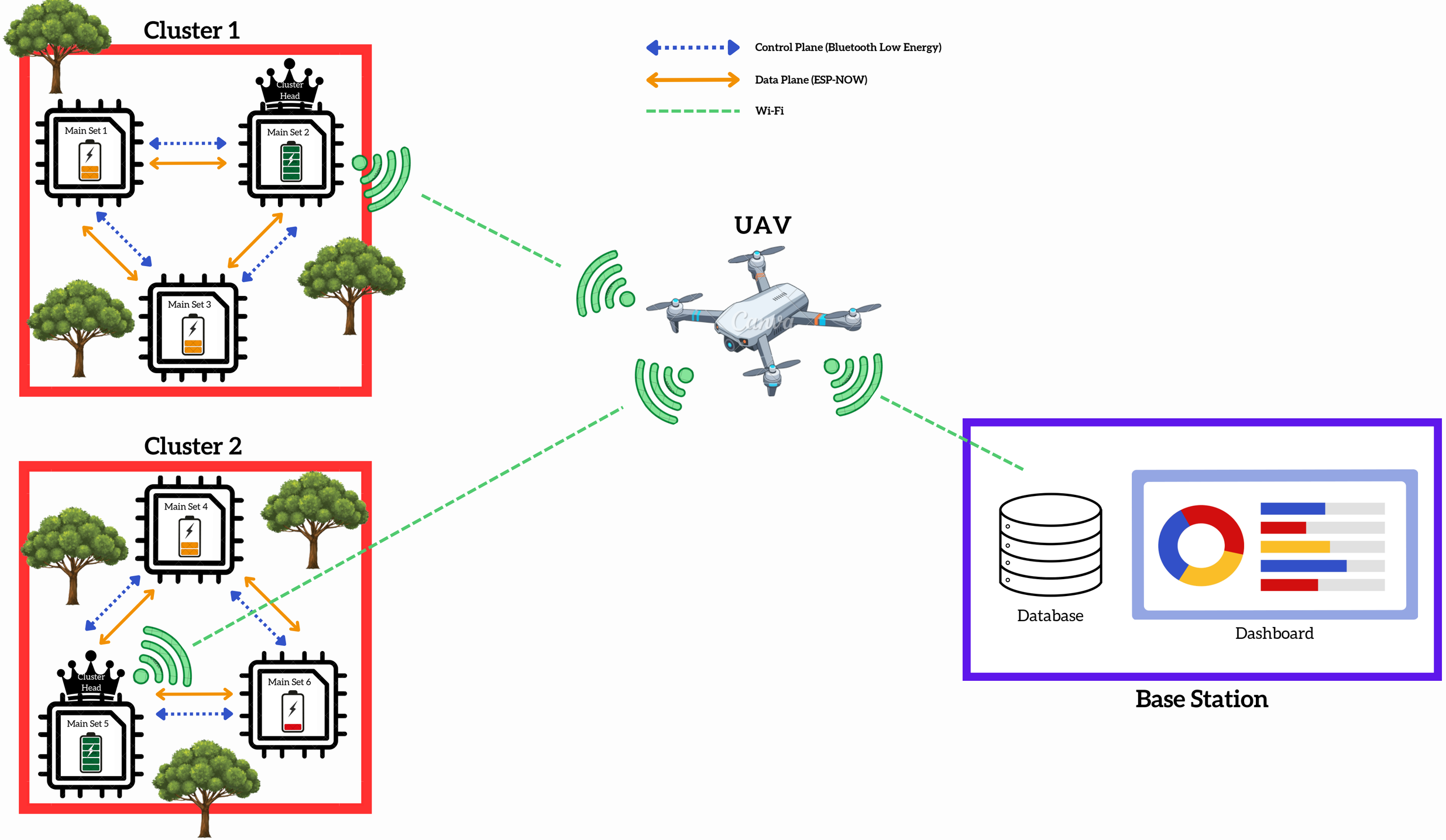
Control Plane (Bluetooth Low Energy)
Data Plane (ESP-NOW)
Wi-Fi
Cluster 1
Cluster Head
Main Set 1
Main Set 2
Main Set 3
Cluster 2
Main Set 4
Cluster Head
Main Set 5
Main Set 6
UAV
Database
Dashboard
Base Station

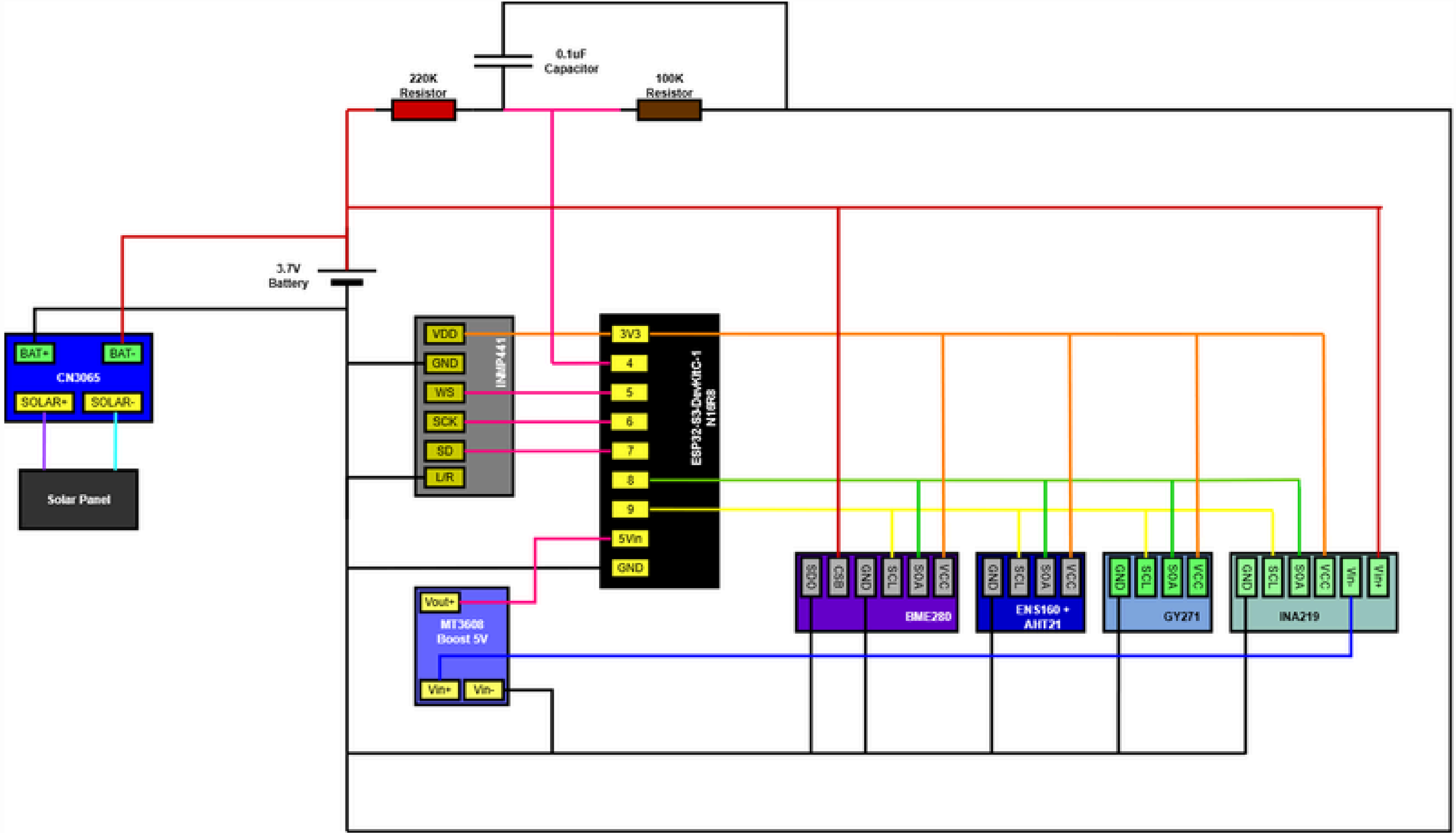
0.1uF
Capacitor
220K
Resistor
100K
Resistor
3.7V
Battery
BAT+
BAT-
CN3065
SOLAR+
SOLAR-
Solar Panel
VDD
GND
WS
SCK
SD
L/R
INMP441
3V3
4
5
6
7
8
9
5Vin
GND
ESP32-S3-DevKitC-1
N16R8
Vout+
MT3608
Boost 5V
Vin+
Vin-
SDO
CSB
GND
SCL
SDA
VCC
BME280
GND
SCL
SDA
VCC
ENS160 +
AHT21
GND
SCL
SDA
VCC
GY271
GND
SCL
SDA
VCC
Vin-
Vin+
INA219

Components

IT22360496

Autonomous multi-sensor environmental monitoring node

Novelty, Objectives, and Implementation Progress

- Autonomous multi-sensor environmental node for disconnected zones integrating sensing, storage, compression, BLE communication, and adaptive power management on an ESP32-S3 platform.
- Energy-aware autonomous operation using a Power Management Engine (Normal / Power Save / Critical modes) to extend deployment lifetime.
- Reliable local data retention architecture with SPIFFS structured logging and CRC-based validation, enabling safe storage and later retrieval by a data ferry / UAV.
- Efficient field operation and retrieval through on-device compression and BLE beacon discovery, allowing fast node detection and reduced transfer time.

Components

IT22564986

Autonomous cluster formation and cluster head selection system

Novelty:

- **4D Metric Evaluation:** Evaluates candidates across Battery (PME), Uptime (persisted), Trust (Crypto verification + Packet delivery), and Link Quality (RSSI + PER).
- **Advanced Data Fusion:** Combines non-linear utility functions with entropy-based, Lyapunov-stable adaptive weights.
- **Optimised Selection Engine:** Achieves single-node consensus via Pareto frontier filtering and Nash bargaining.
- **Industry First:** Unifies Pareto-Nash selection, Lyapunov adaptation, and BLE/ESP-NOW metric collection within a single WSN stack.

Implementation Progress:

- **Algorithm Logic Active:** Fully implemented utility functions, Lyapunov updates, Pareto/Nash math, and tie-breaking/centrality scoring.
- **Live Metric Pipeline:** Real-time data ingestion from ADC, NVS, and BLE sequence gaps, stabilised by EWMA.
- **State Machine Integration:** Seamless "Candidate → Pareto → Nash" election flow.
- **Stability & Validation:** Anti-flap score smoothing and smart re-election triggers (trust/link floors) successfully tested in a live BLE control/ESP-NOW data deployment.

Components

IT22088000

Energy efficient and fault tolerant cluster data communication in UAV assisted WSN

Novelty:

- Dynamic TDMA over ESP-NOW – Deterministic time-sliced communication reducing collisions and idle listening.
- Store-First Persistent Storage – SPIFFS-based compressed data buffering enabling disruption-tolerant operation.
- Reliable CH Data Handover – Queue-based data custody mechanism ensuring zero data loss during CH re-elections.

Implementation Progress:

- TDMA Scheduling Layer Implemented with centralized schedule distribution from the Cluster Head.
- Phase-based synchronization mechanism implemented to align nodes with TDMA schedule cycles.
- SPIFFS-based storage manager implemented with compressed JSON logging and CRC validation.
- Cluster Head Data Handover Logic Implemented
- Node-to-node communication, storage operations, and scheduled data transmission successfully tested on ESP-based hardware.

Components

IT22069122

Intelligent UAV-assisted data ferring in disconnected sensor deployment

Novelty: Autonomous UAV-based Data Mule for Disconnected WSNs

- The system introduces a UAV acting as an autonomous data mule, capable of collecting sensor data from geographically distributed cluster heads in a network-disconnected environment where traditional internet or continuous communication links are unavailable.

Implementation Progress:

- WSN nodes are configured to transmit sensor data to the UAV onboard computer via Wi-Fi using HTTP.
- The UAV platform has been assembled and configured with a flight controller and companion computer.
- Communication between the UAV and sensor nodes has been successfully implemented and tested.
- Initial waypoint navigation has been implemented using the autopilot firmware.
- A base station server and database have been set up to receive and store the collected sensor data.
- The data transfer workflow from UAV to the ground station has been implemented and verified

Integration Points and Deployment Setup

- BLE 5.0 Coded PHY (Control Plane)
- ESP-NOW (Data Plane intra-cluster)
- Wi-Fi (CH → UAV)
- JSON storage (SPIFFS)
- HMAC-SHA256 authentication

- Ground nodes: ESP32-based embedded devices
- UAV: Wi-Fi AP + Flask HTTP endpoint
- Server: Dashboard & visualization
- Single integrated deployment environment

```c
// Data structure for cluster messages
typedef struct {
  uint32_t sender_id;
  uint32_t type;
  uint8_t payload[240]; // Max ESP-NOW payload is 250 bytes
} cluster_message_t;

// Time Slicing Schedule Message
typedef struct {
  int64_t epoch_us;
  uint8_t slot_index;
  uint8_t slot_duration_sec;
  uint32_t magic; // 0x53434845 "SCHE"
} schedule_msg_t;
```

```c
typedef struct {
  uint32_t node_id;
  float temp_c;
  float hum_pct;
  uint32_t pressure_hpa;
  uint16_t eco2_ppm;
  uint16_t tvoc_ppb;
  uint16_t aqi;
  float audio_rms;
  float mag_x;
  float mag_y;
  float mag_z;
  uint64_t timestamp_ms; // Upgraded to 64-bit for long uptimes
  uint32_t seq_num;      // Monotonic sequence number for PDR
  uint8_t mac_addr[6];   // Source MAC for provenance
  uint8_t flags;         // SENSOR_PAYLOAD_FLAG_*: real vs dummy data
} sensor_payload_t;
```

Commercialization / Impact

Target Market

- Environmental monitoring agencies
- Disaster recovery authorities
- Agricultural analytics companies
- Defense and tactical monitoring systems

Value Proposition

Traditional WSN

- Requires infrastructure
- High relay cost
- Vulnerable CH failure
- No trust/security
- No energy benchmarking

Proposed System

- Works fully disconnected
- UAV ferry eliminates relays
- Persistent storage
- HMAC-secured CH election
- Compression-energy evaluation

Cost & Feasibility

- ESP32-based nodes (~$30–50 per node)
- Off-the-shelf UAV platform
- Solar-powered = minimal maintenance
- Scalable by adding clusters
- **Service Model (Subscription-Based Monitoring)**
  - Starter Package (up to 5 sensor nodes, ~$40 per month)
  - Professional (up to 20 sensor nodes + analytics, ~$120 per month)
  - Enterprise Package (large deployments + UAV fleet, custom pricing)

Adoption Plan

- Pilot in controlled forest zone
- Scale cluster size
- Integrate analytics dashboard
- Commercial partnerships with environmental agencies

Demo Plan + Roles

Demo Flow (End-to-End)

1. Power on nodes → autonomous cluster formation
2. CH election displayed (trust + energy score)
3. MS node TDMA transmission
4. Data stored in SPIFFS
5. Simulated UAV arrival (BLE / RF trigger)
6. Wi-Fi data transfer
7. Dashboard visualization

Member Roles

- IT22360496 → Sensor node + compression
- IT22564986 → CH election + trust security
- IT22088000 → Communication & storage
- IT22069122 → UAV + data relay

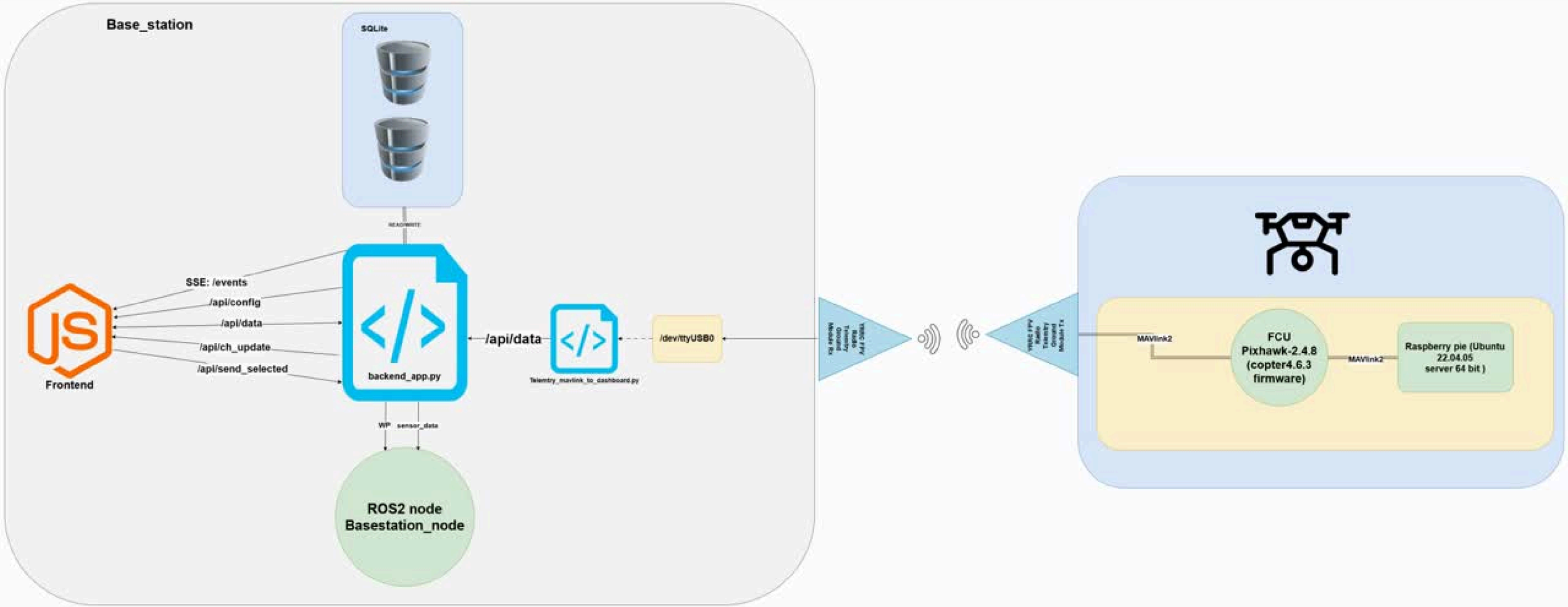
Base_station
SQLite
READ/WRITE
SSE: /events
/api/config
/api/data
/api/ch_update
/api/send_selected
Frontend
backend_app.py
/api/data
Telemtry_mavlink_to_dashboard.py
/dev/ttyUSB0
WP
sensor_data
ROS2 node
Basestation_node
MAVlink2
FCU
Pixhawk-2.4.8
(copter4.6.3
firmware)
MAVlink2
Raspberry pie (Ubuntu
22.04.05
server 64 bit)

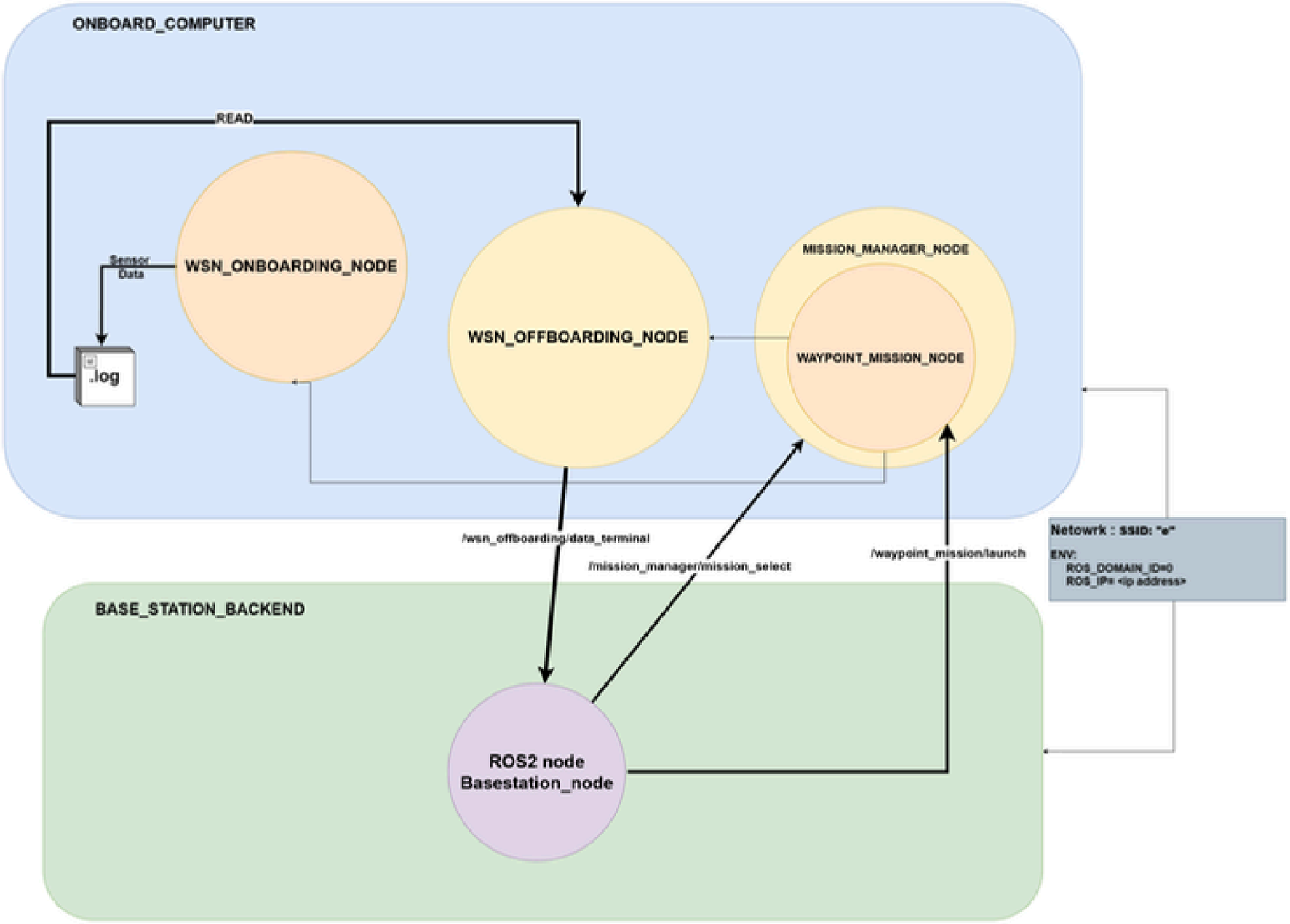
ONBOARD_COMPUTER
READ
Sensor Data
WSN_ONBOARDING_NODE
.log
WSN_OFFBOARDING_NODE
MISSION_MANAGER_NODE
WAYPOINT_MISSION_NODE
/wsn_offboarding/data_terminal
/mission_manager/mission_select
/waypoint_mission/launch
Netowrk : SSID: "e"
ENV:
ROS_DOMAIN_ID=0
ROS_IP= <ip address>
BASE_STATION_BACKEND
ROS2 node
Basestation_node

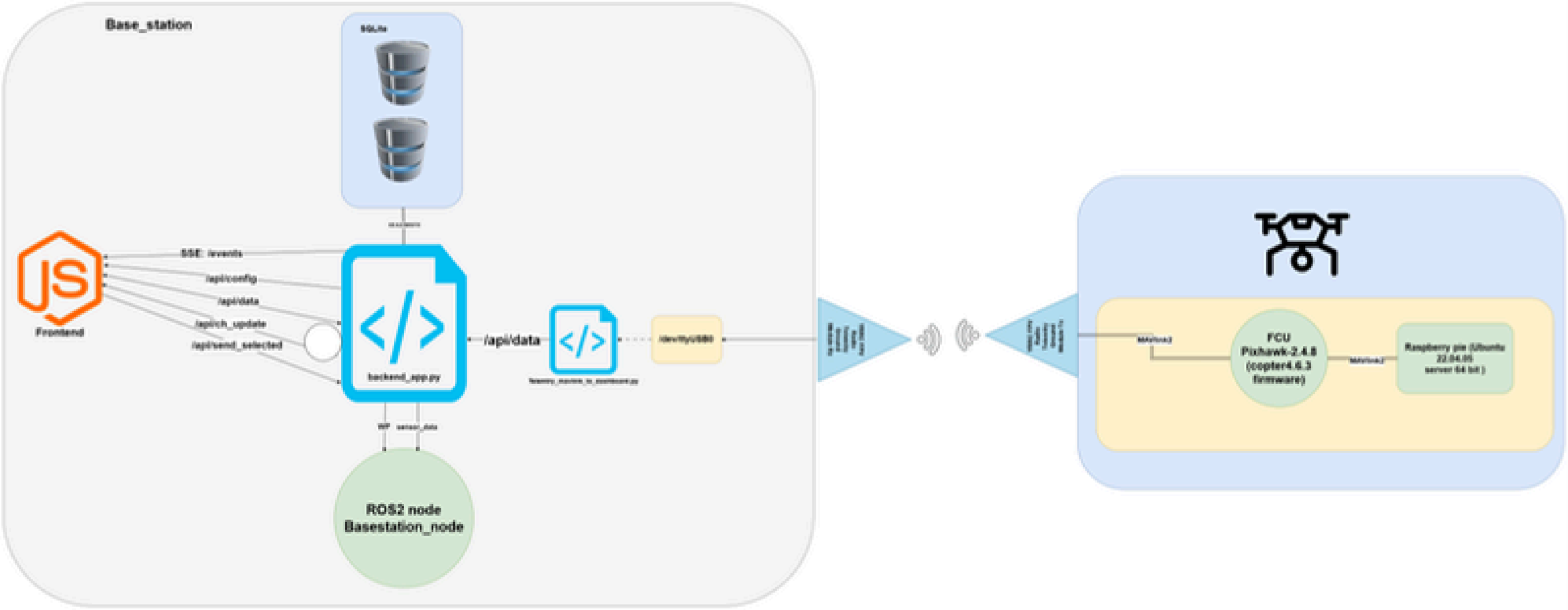
Base_station
SQLite
Frontend
SSE: /events
/api/config
/api/data
/api/ch_update
/api/send_selected
backend_app.py
/api/data
/dev/ttyUSB0
ROS2 node
Basestation_node
FCU
Pixhawk-2.4.8
(copter4.6.3
firmware)
Raspberry pie (Ubuntu
22.04.05
server 64 bit)