AUTONOMOUS DATA FERRYING FROM A SELF-ORGANIZING/HEALING WSN IN DISCONNECTED ZONES

25-26J-010

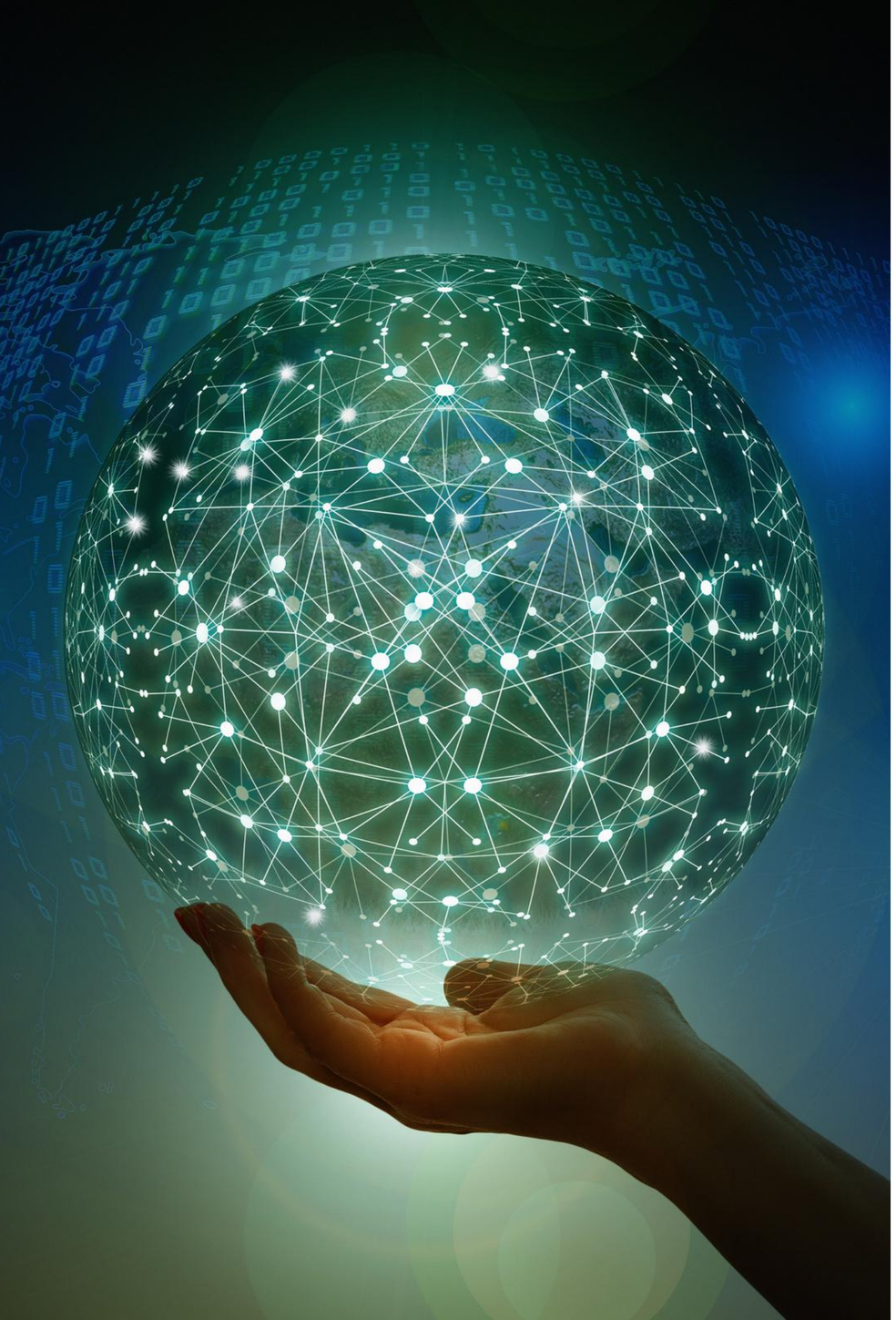

Introduction to the Overall Project

KAPWING

AUTONOMOUS MULTI-SENSOR ENVIRONMENTAL MONITORING NODE

COMPUTER SYSTEMS AND NETWORK ENGINEERING

Knowledge Gap or Problem Definition

- Existing Wireless Sensor Network nodes deployed in disconnected zones often fail to achieve long-term autonomy due to poor power management and inefficient on-node data handling.
- Current compression strategies in constrained devices are underexplored – most rely on either no compression or basic entropy methods without rigorous evaluation for energy vs. performance trade-offs.

Shortcomings of Existing Systems

- Nodes consume excessive energy under single-mode operation; many systems collapse in weeks or months.
- Data transmission without compression wastes bandwidth and increases latency in UAV ferrying.
- No comparative study exists showing which entropy-based compression is better suited for ESP32-class hardware in WSNs.

Proposed Solution

- Introduce a Power Management Engine with three adaptive modes for longevity and self-healing.
- Evaluate Huffman vs. LZ-family compression directly on ESP32-S3 to provide evidence-based guidance on the most energy-efficient approach for resource-constrained WSN nodes.
- This fills a research gap by combining power-aware design + practical compression benchmarking for disconnected WSNs.

Key Domains of Specialisation

- **Embedded Systems & Hardware Design**
  - ESP32-S3 microcontroller integration with BLE and solar-based PSU.
- **Computer Systems & Network Engineering**
  - Low-power wireless protocols, energy management in sensor networks.
- **Data Compression / Information Theory**
  - Entropy coding for resource-constrained environments.

Latest Technologies Utilised

- ESP32-S3 microcontroller with BLE and SPIFFS storage.
- BLE beaconing for low-power UAV detection.
- Solar + battery hybrid PSU for self-sustaining energy.
- Entropy-based compression implemented in embedded C.

How to Evaluate Success

- **Validation Metrics:**
  - Compression ratio (% data reduction).
  - CPU cycle consumption and memory footprint on ESP32-S3.
  - Energy usage per compression/decompression cycle.
  - Overall impact on node lifetime extension (months of operation).
- **Methods:**
  - Benchmarked against baseline (no compression).
  - Prototype testing with real sensor datasets (audio, gas, climate).
  - Simulation of long-term energy profiles.

Data Availability and Ethical Clearance

- **Data**
  - Synthetic and open environmental datasets (climate, acoustic, gas readings) available from repositories (e.g., IEEE Dataport, UCI).
- **Ethics**
  - No personal/sensitive data involved. Environmental sensing only → no ethical clearance needed.

AUTONOMOUS MULTI-SENSOR ENVIRONMENTAL MONITORING NODE

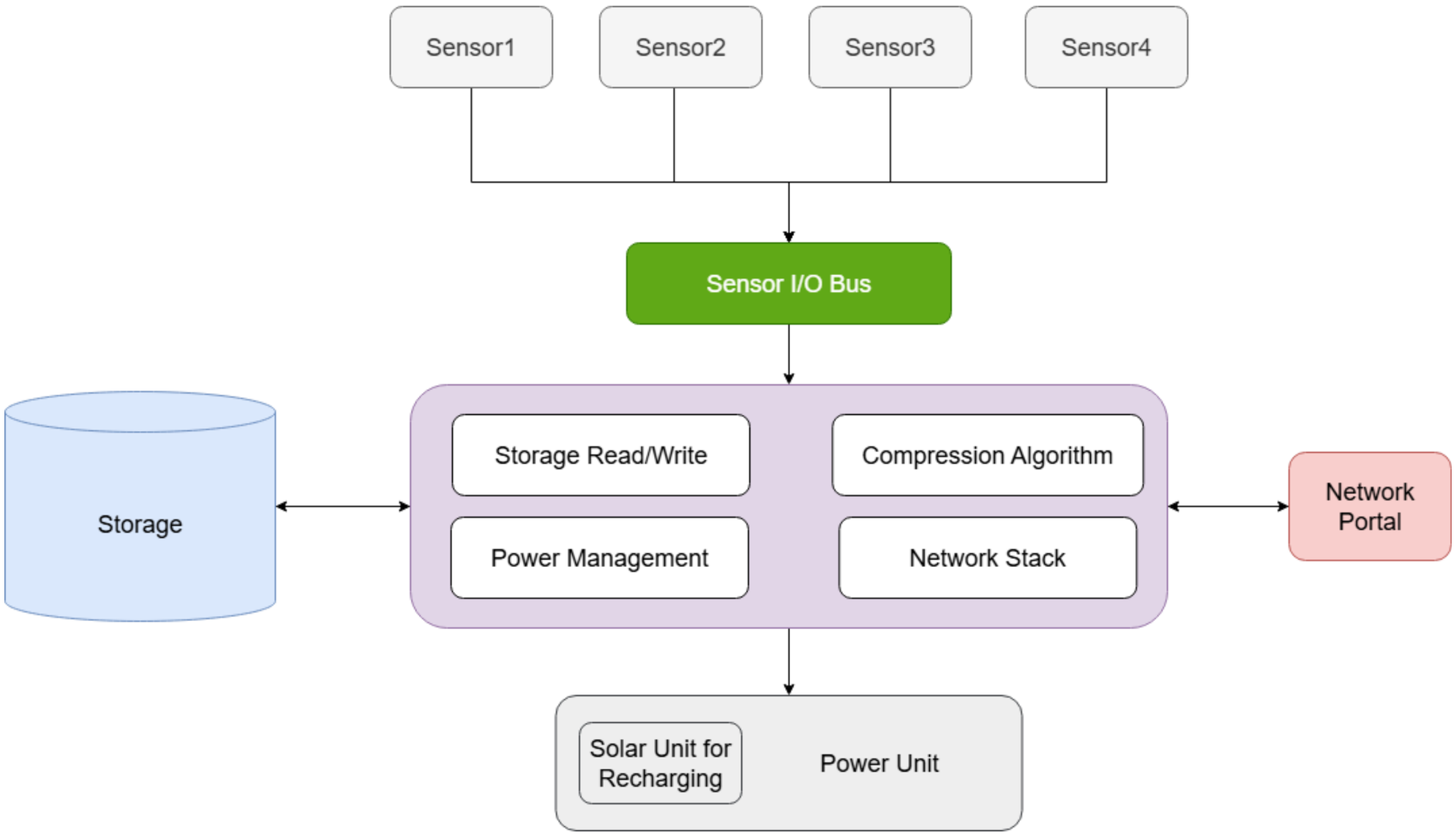

IT22360496 | WICKRAMA ARACHCHI D R | 25-26J-010

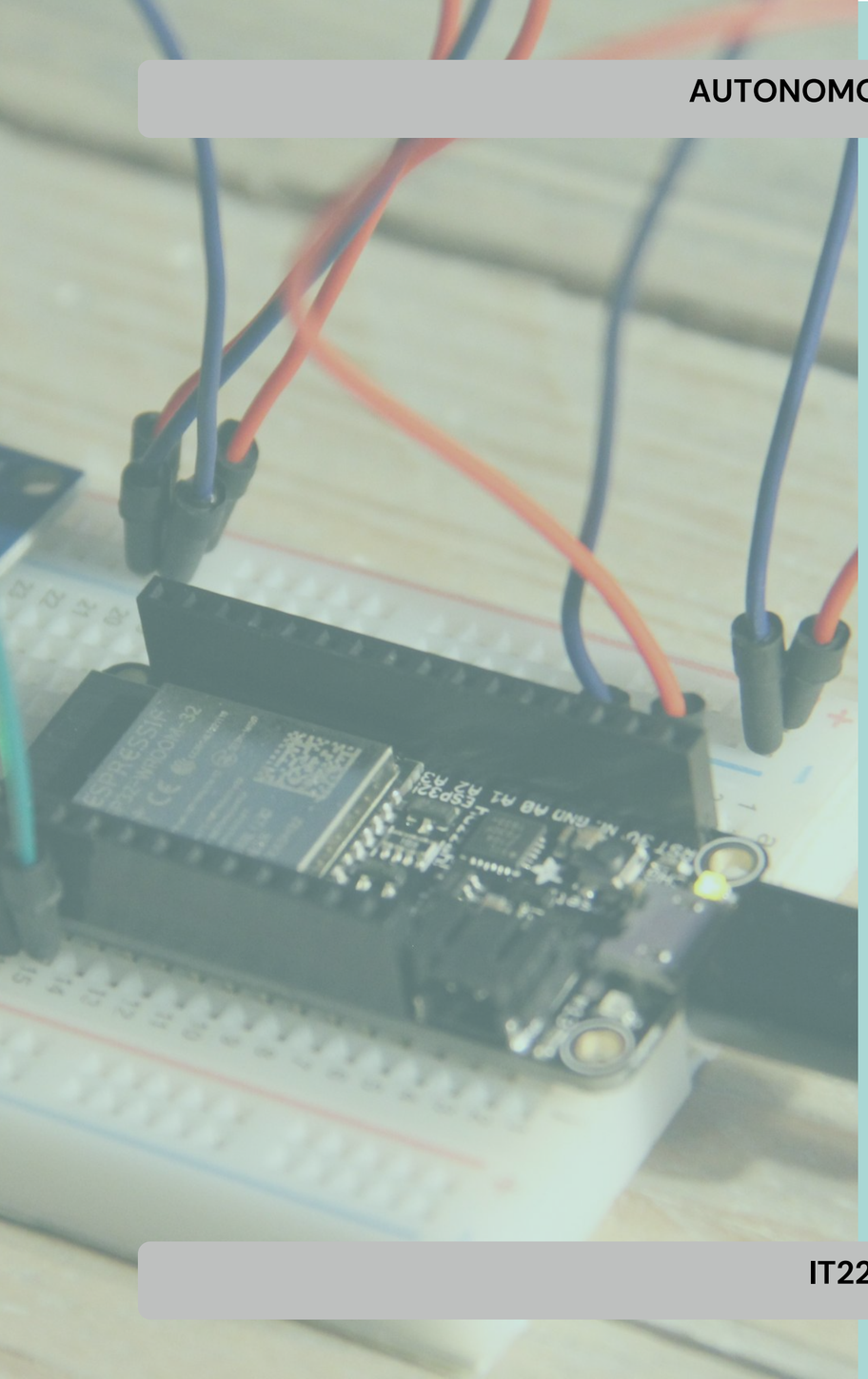

Real-World Usage Scenario

- Deployed in remote disconnected zones (wildlife reserves, disaster areas).
- A UAV passes periodically, wakes up nodes via BLE beacon, and collects compressed data.
- PME ensures nodes autonomously survive >12 months by adjusting modes based on battery levels.
- Researchers and operators receive reliable, compressed sensor data through the UAV → base station pipeline.

AUTONOMOUS CLUSTER FORMATION AND CLUSTER HEAD SELECTION SYSTEM

COMPUTER SYSTEMS AND NETWORK ENGINEERING

Gap Analysis

Weakness in Current Protocols

- Existing clustering protocols for WSNs (e.g., LEACH, HEED) are not robust when applied to disconnected, resource-constrained environments.

Research Aim

- Develop an autonomous cluster formation algorithm that is more reliable and secure.

Shortcomings of Existing Systems

- Energy-focused protocols (LEACH, HEED) neglect trust, fairness, and persistence.
- Lack of authentication is vulnerable to spoofing & replay attacks.
- No trust evaluation (packet reliability, handshake integrity).
- Absence of uptime persistence, leading to unfair CH rotation.

Proposed Solution

- Multi-parameter CH election formula (Battery, Uptime, Trust, Link Quality).
- Secure CH announcements with HMAC over BLE extended advertisements.
- RTC memory persistent uptime tracking.
- Improves robustness, survivability, and fairness of WSNs in harsh, infrastructure-less environments.

Key Domains of Specialisation

- **Wireless Sensor Networks**
  Clustering & distributed algorithms.
- **Embedded Systems**
  Firmware for ESP32-S3 with FreeRTOS.
- **IoT Security**
  Cryptographic integrity (HMAC).

How to Evaluate Success

- Election convergence: time for nodes to agree on CH.
- Fairness: CH role distribution.
- Security: % spoof/replay rejection rate.
- Reliability: % successful end-to-end data delivery.

Technologies Utilised

- ESP32-S3 with BLE 5.1 Coded PHY (long-range).
- FreeRTOS for real-time task scheduling.
- mbedTLS for HMAC cryptographic verification.

Data Availability and Ethical Clearance

- Only environmental and network performance data collected.
- No personal/human data, no ethical concerns.

Real-World Use Case

- Remote climate stations in forests, glaciers, coasts.
- Early prediction with distributed sensors.
- Continuous monitoring of CO_2, temperature, humidity, rainfall, ice melt.
- UAV-based data ferry to ensures connectivity in disconnected regions.

System Overview

General Architecture

- Sensor nodes self-organize into clusters.
- A Cluster Head (CH) is elected using a secure, fair, and multi-parameter algorithm.
- The elected CH is responsible for local coordination until UAV pickup.

Node Level Behaviour

- **Neighbour Discovery:**

Each ESP32-S3 node periodically broadcasts BLE extended advertisements to announce its presence.

- **Score Calculation:**

Every node computes a composite election score based on:

Battery Level: Normalised via ADC readings.

Uptime: Persistent tracking using RTC memory.

Trust Score: Calculated from handshake success rate, packet delivery ratio, and neighbour feedback.

Link Quality: Evaluated using RSSI and packet error rate (PER).

- **Score Exchange:**

Nodes broadcast their computed score securely to neighbours.

- **CH Election:**

The node with the highest verified score is elected as the Cluster Head. Ties are resolved by MAC address.

Security & Trust Enforcement

- **Authentication:**

CH announcements are broadcast using HMAC-SHA256, preventing spoofing and replay attacks.

- **Trust Filtering:**

Nodes with trust scores below a set threshold are automatically excluded from CH candidacy.

- **Verification:**

Cluster members validate the HMAC before recognizing the CH.

System Architecture

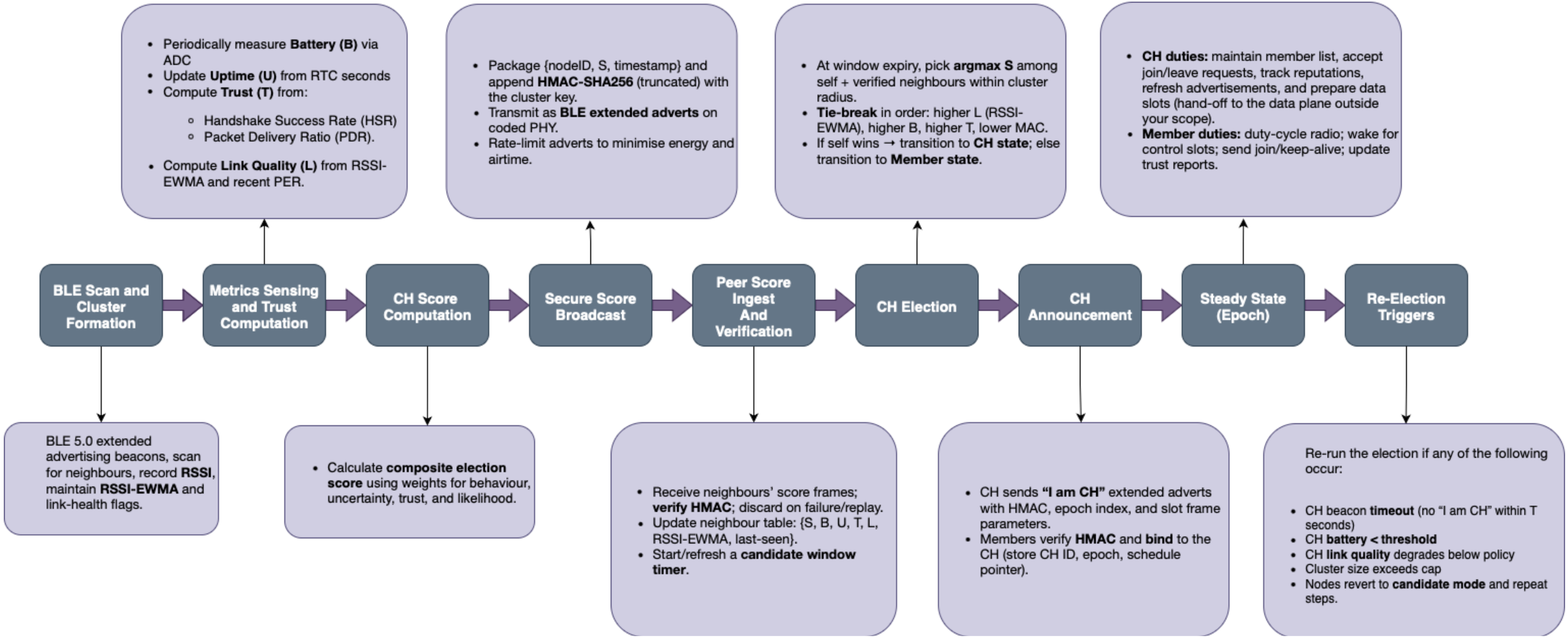

ENERGY EFFICIENT AND FAULT TOLERANT CLUSTER DATA COMMUNICATION IN UAV ASSISTED WSN

COMPUTER SYSTEMS AND NETWORK ENGINEERING

Challenges in Existing UAV-assisted WSNs:

- Current UAV assisted WSNs suffer from energy waste due to continuous polling, high power UAV detection through Wi-Fi scanning, and volatile Cluster Head (CH) storage leading to data loss.

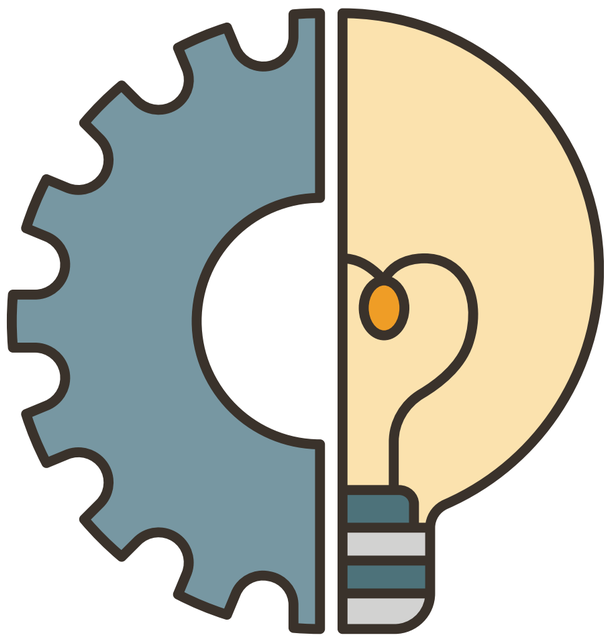

Key Knowledge Gaps / Problems:

- How to design energy efficient MS↔CH communication for solar powered nodes?
- How to guarantee fault tolerant, lossless CH↔UAV handover in disconnected environments?

Solution:

- Integrates time sliced ESP-NOW scheduling, BLE beaconing with ACK exchange for UAV detection, and persistent JSON storage in SPIFFS for reliable, fault tolerant operation.

Specialization Knowledge and Technology

Domains of Knowledge Applied

Wireless Communication & Networking:

- ESP-NOW for low power MS↔CH transfer
- BLE for UAV detection
- MQTT for CH→UAV handover.

Embedded Systems & IoT:

- ESP32 microcontrollers
- SPIFFS flash storage
- JSON based persistence.

Energy Aware Computing:

- Time sliced scheduling

Latest Technologies in Use

ESP-NOW:

- Peer to peer, no Wi-Fi association overhead.

BLE Beaconing:

- Ultra low power UAV detection + ACK exchange.

SPIFFS + JSON:

- Fault tolerant data storage.

MQTT over Wi-Fi:

- Lightweight publish/subscribe with acknowledgements.

Evaluation, Validation and Data Availability

Evaluation & Validation

Time-Sliced Scheduling:

- Collision free transmissions in multi-node tests.

Persistent Storage:

- Stress tested for CH resets and re-elections.

UAV Detection:

- Beacon-ACK latency and success rate validation.

MQTT Transfer:

- Packet delivery ratio & acknowledgement response time.

Data Availability & Ethics

Data Availability:

- Real time sensor data.

Ethics:

- No personal/sensitive data collected.
- Deployment confined to testbeds.
- Focus purely on environmental parameters.

System Overview

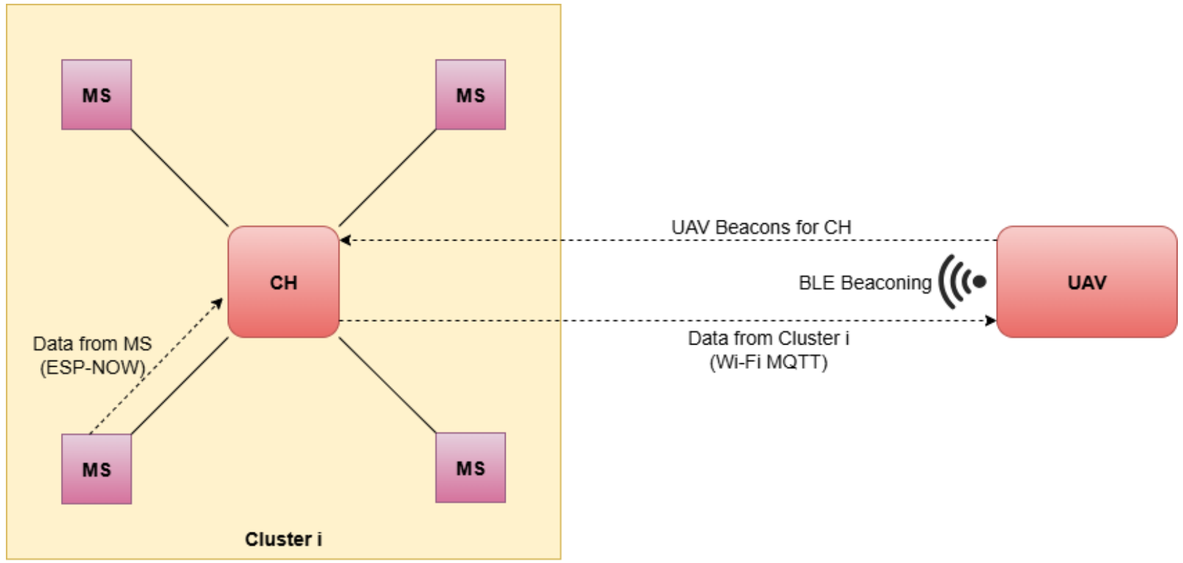

- MS→CH: Time sliced ESP-NOW, MS nodes wake only in assigned slots.
- CH Storage: JSON in SPIFFS
- UAV Detection: BLE beacon-ACK exchange confirms UAV presence.
- CH→UAV: Data offloaded via MQTT over Wi-Fi with acknowledgement.

Real World Usage Scenario

- Deployed in disconnected zones such as forest reserves, flood-prone regions, and rural agriculture fields.
- MS nodes operate autonomously, waking only during scheduled slots to conserve solar energy.
- CH securely buffers sensor readings, ensuring no data is lost even if leadership changes.
- UAVs make periodic flights, triggering data handover through BLE beacons and collecting updates via MQTT.
- Researchers and decision-makers access consolidated data through a central dashboard, enabling early warnings for wildfires, crop failures, or disaster response.

ENERGY EFFICIENT AND FAULT TOLERANT CLUSTER DATA COMMUNICATION IN UAV ASSISTED WSN

End to End Data Journey

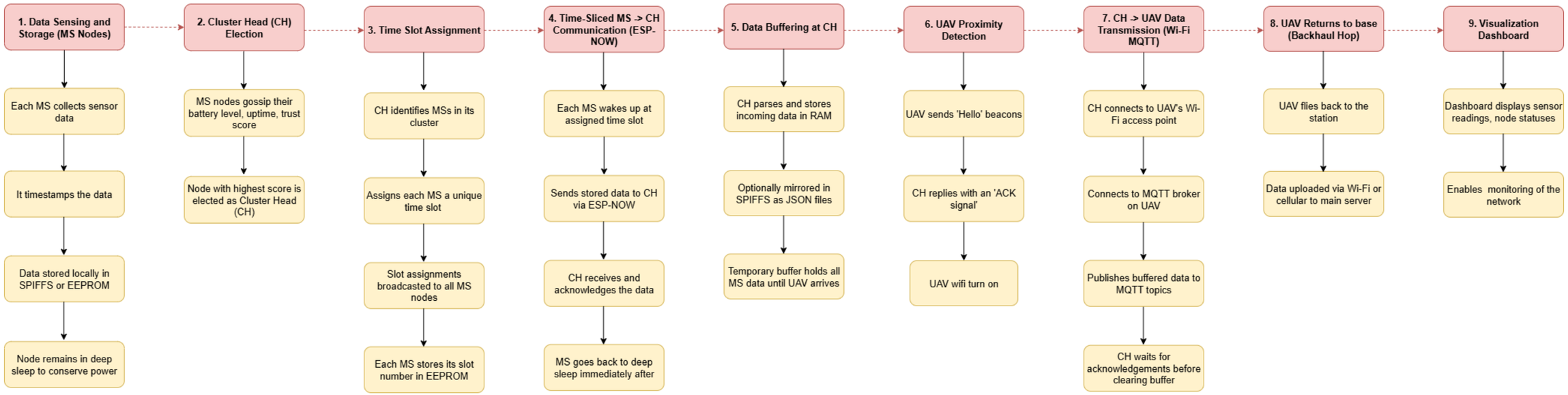

IT22088000 | THAMASHA W.Y.M.G. | 25-26J-010

INTELLIGENT UAV-ASSISTED DATA FERRING WITH PRIORITY-BASED ROUTING IN DISCONNECTED SENSOR DEPLOYMENTS

COMPUTER SYSTEMS AND NETWORK ENGINEERING

Proven Gap

- Sensors in disconnected zones lack accurate GPS-free localization; RSSI and GPS have major shortcomings.
- Static UAV routing wastes energy, delays critical data collection.
- Health monitoring of WSN nodes is limited or absent, risking data loss.

Creative Solution

- Solution: UAV uses BLE 5.1 AoA/AoD for precise GPS mapping onboard, dynamic energy-aware route planning, and real-time network health auditing.

Specialization Knowledge and Technology

- **Domains:** Embedded Systems, Wireless Networks, Signal Processing, Machine Learning.

- **Tech:** BLE 5.1 Direction Finding (AoA/AoD), ESP-NOW, Raspberry Pi onboard computing, Machine Learning for energy prediction and fault detection, MQTT for data sync.

- **Validation:** Sub-meter localization accuracy, improved UAV flight efficiency, >95% fault detection accuracy in tests

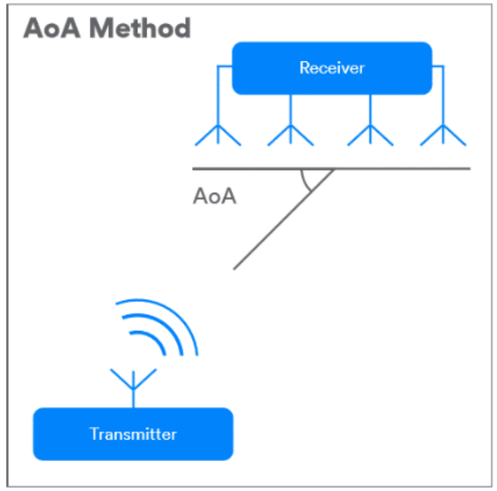

Bluetooth direction finding using angle of arrival (AoA)

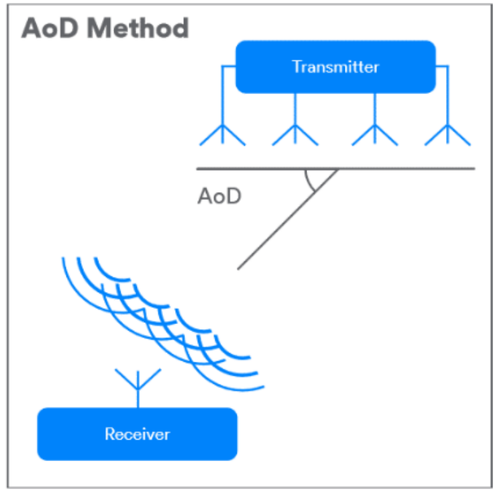

Bluetooth direction finding using angle of departure (AoD)

Implementation Overview

- BLE antenna array and direction-finding process on UAV capture beacon angles.
- Onboard computations triangulate WSN cluster head GPS locations.
- UAV routing engine dynamically prioritizes visiting critical or low-energy nodes.
- Health auditing identifies failed or silent nodes during flights; alerts fed to base dashboard.

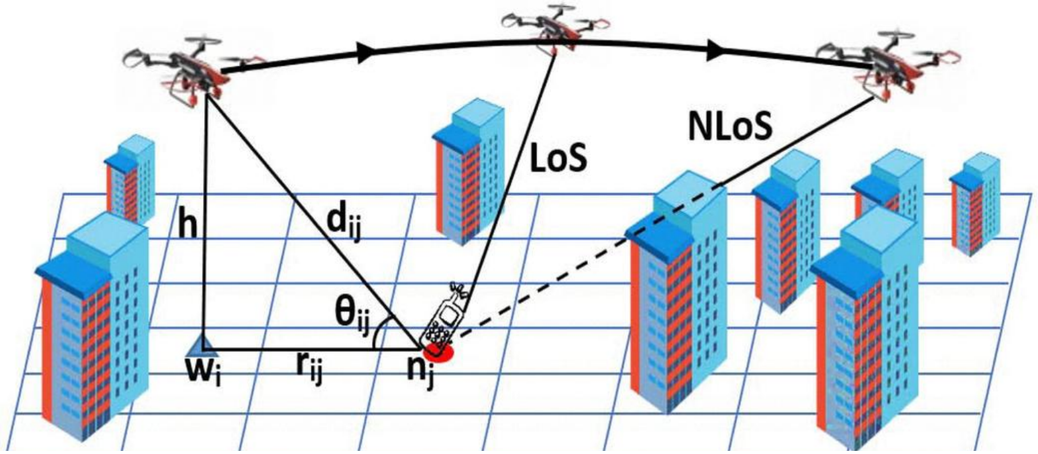

Real-World Use Case

- Deployed in disconnected zones for scientific research, wildlife preserves, agriculture with no connectivity.
- UAV autonomously plans efficient routes balancing mission energy with urgency.
- Real-time node health monitoring reduces data loss and extends network lifespan.
- Operator dashboard displays live maps, UAV routes, sensor health, enabling swift decisions.

System Design V1

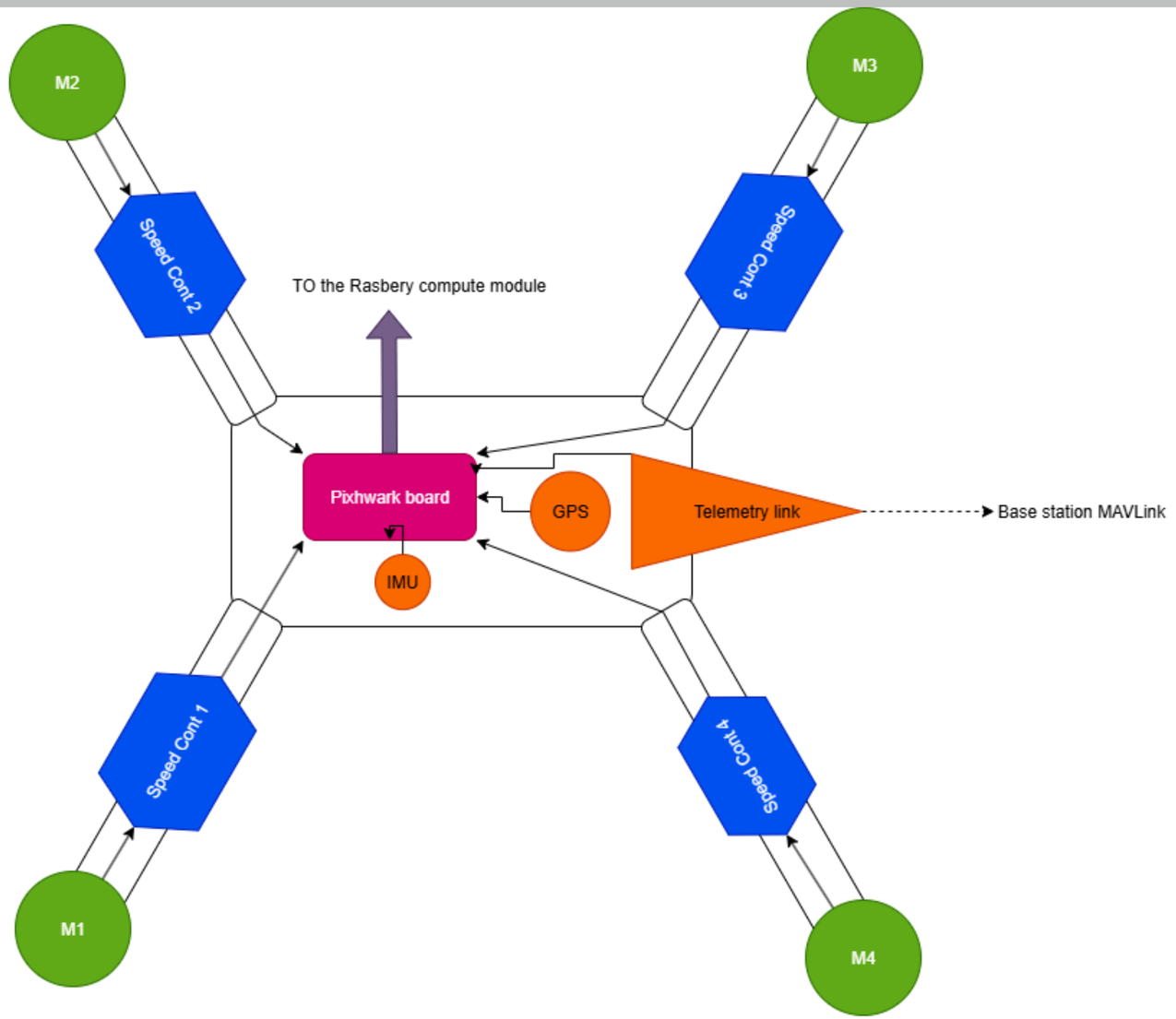

System Design V1

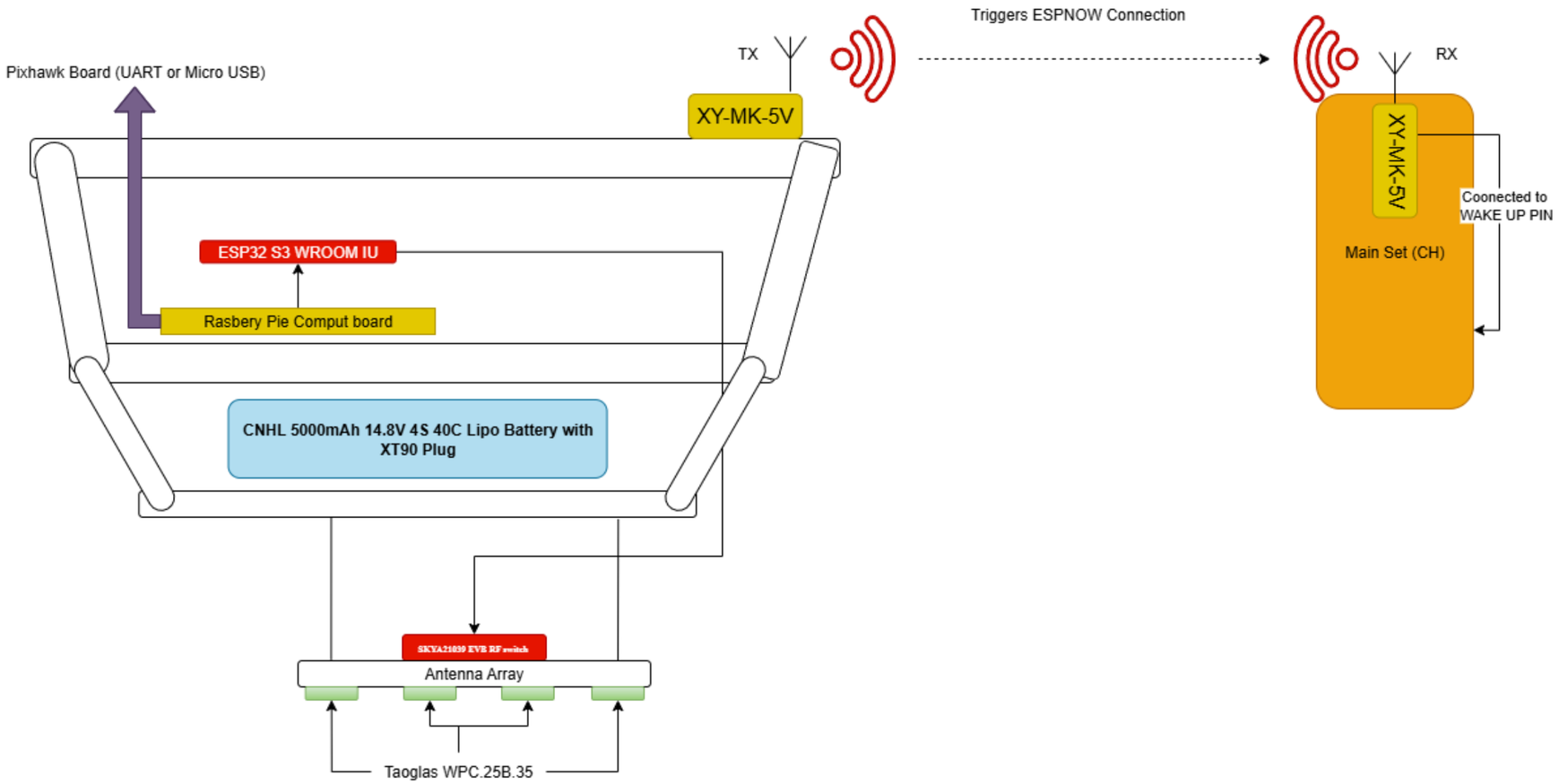

System Design V1

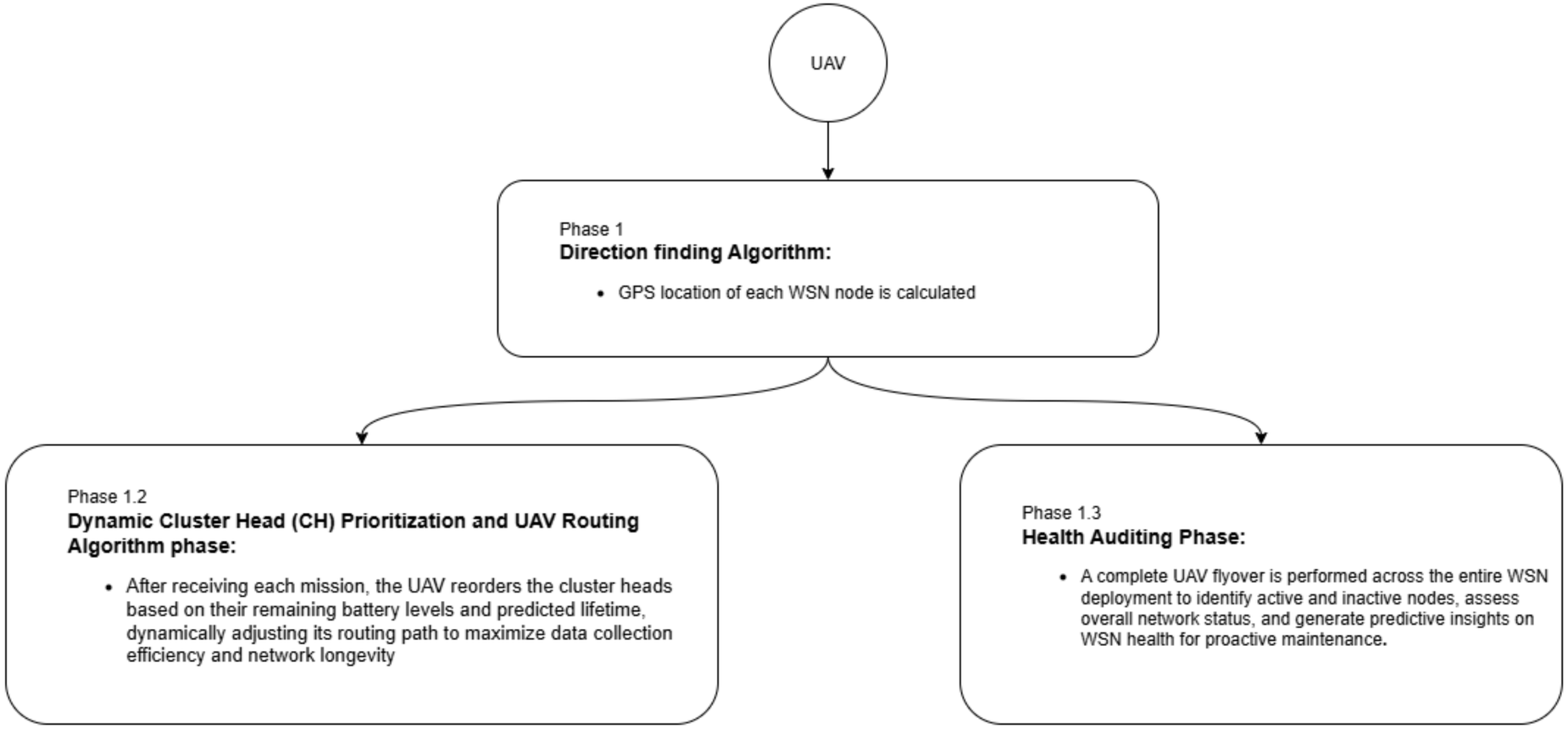

SUPPORTING ITEMS

Commercialization

- Applicable in STEM researches, Geology and climate survey, offshore platforms, and remote agricultural zones.
- Modular sensor packs enable rapid deployment in different terrains (environmental, industrial, defense).
- Drone + WSN integration provides a delay-tolerant, infrastructure-free monitoring solution.
- **Potential commercial product:** "UAV-assisted Environmental Monitoring Kit" including sensor nodes, UAV module, and dashboard software.
- **Value proposition:** Reliable, low-power monitoring in areas where no cellular/internet infrastructure exists.

Target Market & Customer Profile

- Primary Customers: Environmental scientists, conservation NGOs, smart agriculture companies.
- Customer Needs: Reliable monitoring without infrastructure, energy efficient long deployments, security and trust aware data collection.

Budget

- **Estimated Material Cost:** ESP32-based nodes, BLE/ESP-NOW modules, sensors (ENS160, INMP441, HMC5883L, BME280, etc.), UAV with onboard SBC (Raspberry Pi/Jetson), solar charging units.
- **Labor Cost:** Prototype assembly, firmware development, testing, and field trials.
- **Cost Recovery Strategy:**
  - **Pricing model:** Sell sensor node kits + UAV bundle + subscription for dashboard access.
  - **Target:** Research institutions, NGOs, government agencies, and defense contractors.
  - Break-even through subscription-based services (data analytics, predictive maintenance, ecosystem monitoring).

Intellectual Property Rights

- Patent potential in cluster head election algorithm, BLE-triggered wake-up + ESP-NOW communication model, and integration of UAV as aerial auditor.
- Research outputs can be protected under software IP (dashboard + algorithms) and hardware design patents for sensor nodes.

Q & A

Thank you!