Electronics Experiment Preview: Feedback Circuit

B13901165張勝勛, B13901020陳諺德

2026 年 3 月 30 日

1 Experiment setup

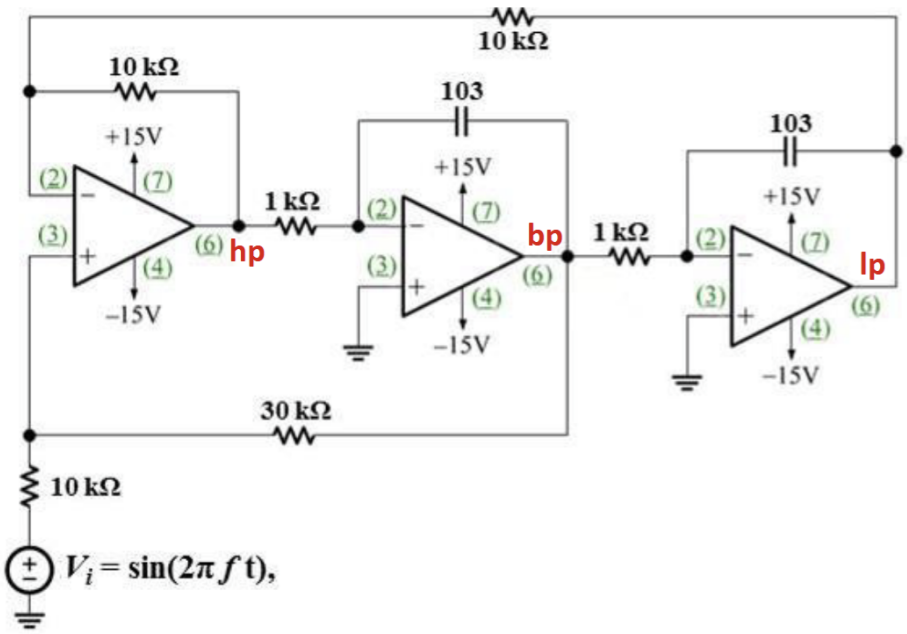

圖 1: Experiment setup

2 experiment goals

- find the maximum voltage gain (A_{max}) of the feedback circuit.
- plot the band-pass amplitude-frequency curve of this circuit
- find f_{L3dB_BP}, f_{H3dB_BP}, and BW

3 Attention

- input frequency is from 500 Hz to 200 kHz.
- the DC high voltage is 15 V, and the DC low voltage is -15 V.
- read the configuration of TL084 and uA741 before the experiment.