Electronics Experiment Report:

B13901165張勝勛, B13901020陳諺德

2026 年 4 月 1 日

1 Experiment setup

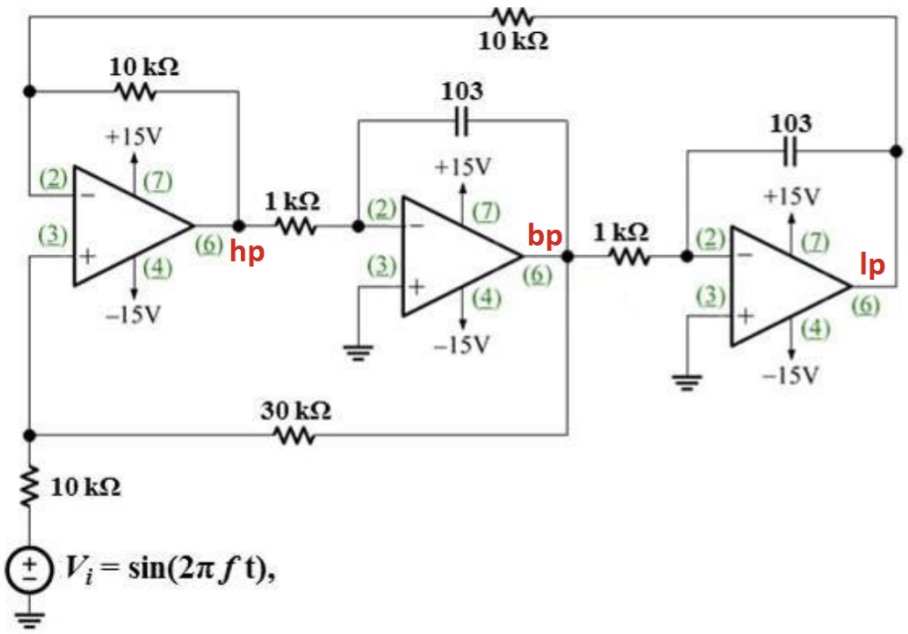

圖 1: Experiment setup

2 Experiment results

2.1 original data table

Here is the original data we collected from the experiment:

f (kHz)	CH1	CH2	CH2/CH1	20 log(CH2/CH1)	log(f)	備註
1.0	432	64	0.1481	-16.5861	0.0000	
3.0	432	184	0.4259	-7.4133	0.4771	
5.0	432	280	0.6481	-3.7665	0.6990	
7.0	432	420	0.9722	-0.2447	0.8451	
10.0	432	736	1.7037	4.6279	1.0000	
11.0	432	912	2.1111	6.4902	1.0414	f3dB low
12.0	432	1090	2.5231	8.0389	1.0792	
15.0	432	1280	2.9630	9.4345	1.1761	
17.0	432	1060	2.4537	7.7964	1.2304	
18.0	432	960	2.2222	6.9357	1.2553	
18.5	432	904	2.0926	6.4137	1.2672	f3dB high
19.0	432	856	1.9815	5.9398	1.2788	
20.0	432	768	1.7778	4.9975	1.3010	
30.0	432	400	0.9259	-0.6685	1.4771	
50.0	432	232	0.5370	-5.3999	1.6990	
100.0	432	144	0.3333	-9.5424	2.0000	
200.0	432	128	0.2963	-10.5655	2.3010	

表 1: frequency response data

2.2 Bode plot

Here is the Bode plot of the frequency response:

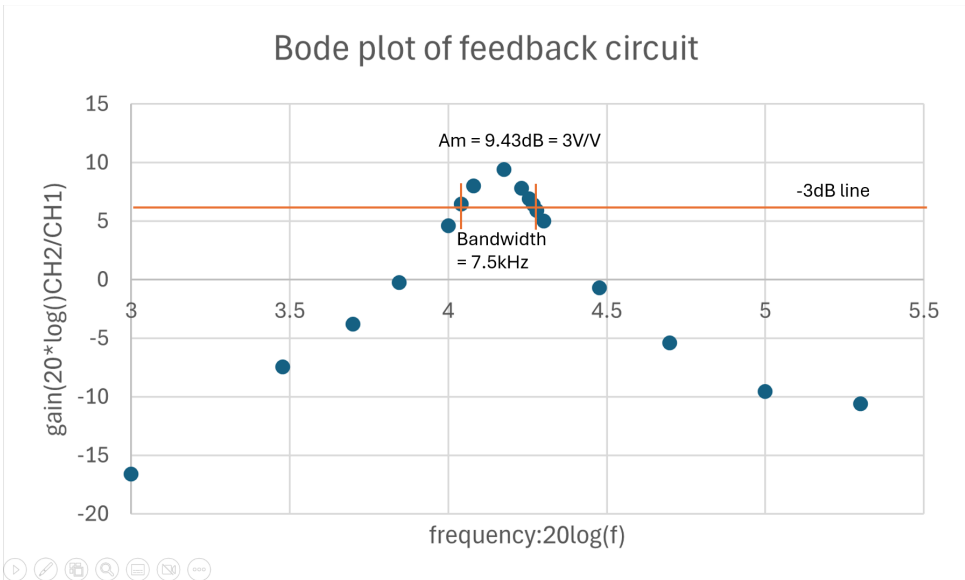

圖 2: Bode plot of the frequency response

2.3 specific configuration

The specific configuration of the circuit is as follows:

- $f_{3dB,low} = 11.0$ kHz
- $f_{3dB,high} = 18.5$ kHz
- $BW = f_{3dB,high} - f_{3dB,low} = 7.5$ kHz
- $A_{max} = 2.96$ at $f = 15.0$ kHz

3 reflection

- 陳諺德: In this experiment, I learned that we can get a band-pass, high-pass, and low pass filter by using three amp concatenated together. Also, I learned more about the configuration of ua741
- 張勝勛: Since the circuit configuration is more complicated this time, I learned how to choose the right length of wires to connect the circuit. In this way, we can easily debug and reduce the possibility of short circuit.