# Electronics Experiment Report: Diode Characteristics

B13901165張勝勛, B13901087洪秉軒

2025 年 10 月 27 日

## 1 Electrical Properties of Diodes

in this section, we connect a diode(Si or zener) and a resistance in series and observe the output waveform and estimate the cut-in voltage of the diode

### 1.1 setup

- $V_s = 6\sin(2\pi ft)$V for Si diode
- $V_s = 10\sin(2\pi ft)$V for zener diode
- $R_L = 10\text{k}\Omega$

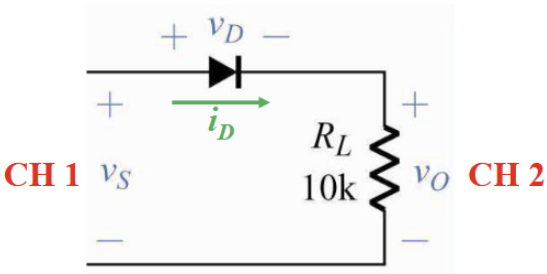


图 1: the circuit diagram for the first experiment

## 1.2 graph

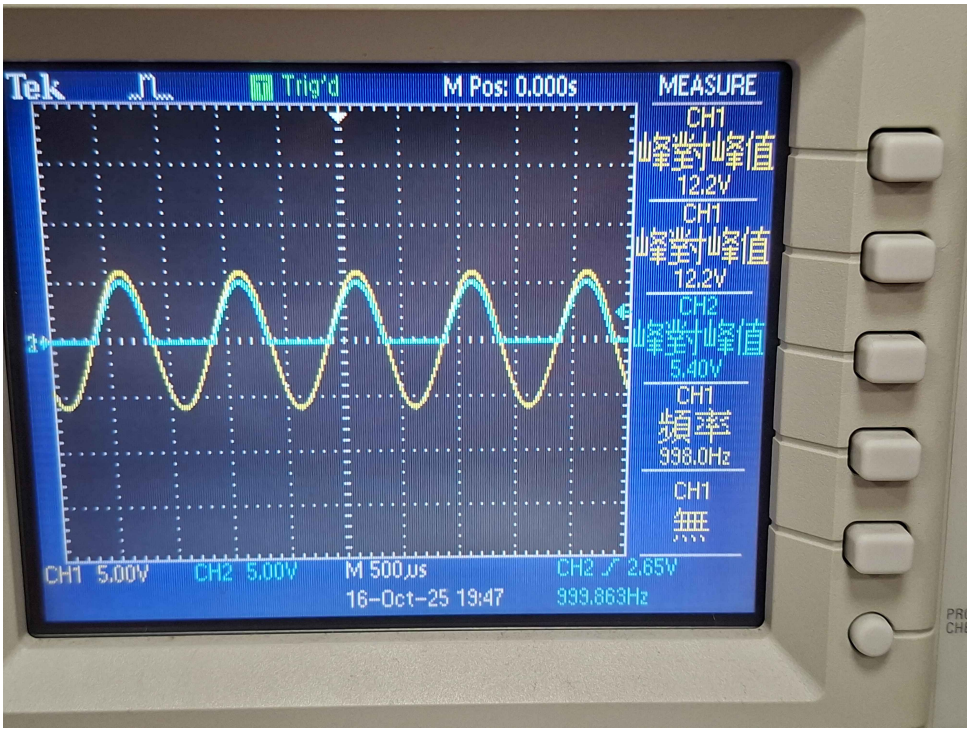


图 2: the output waveform of Si diode with 1k resistance

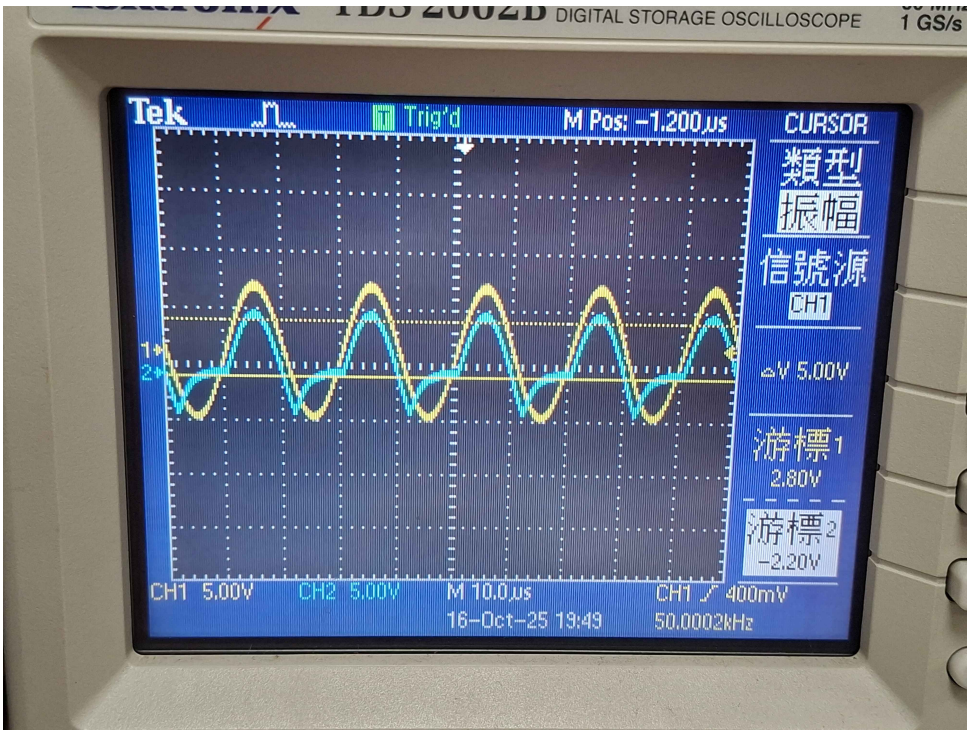


图 3: the output waveform of Si diode with 50k resistance

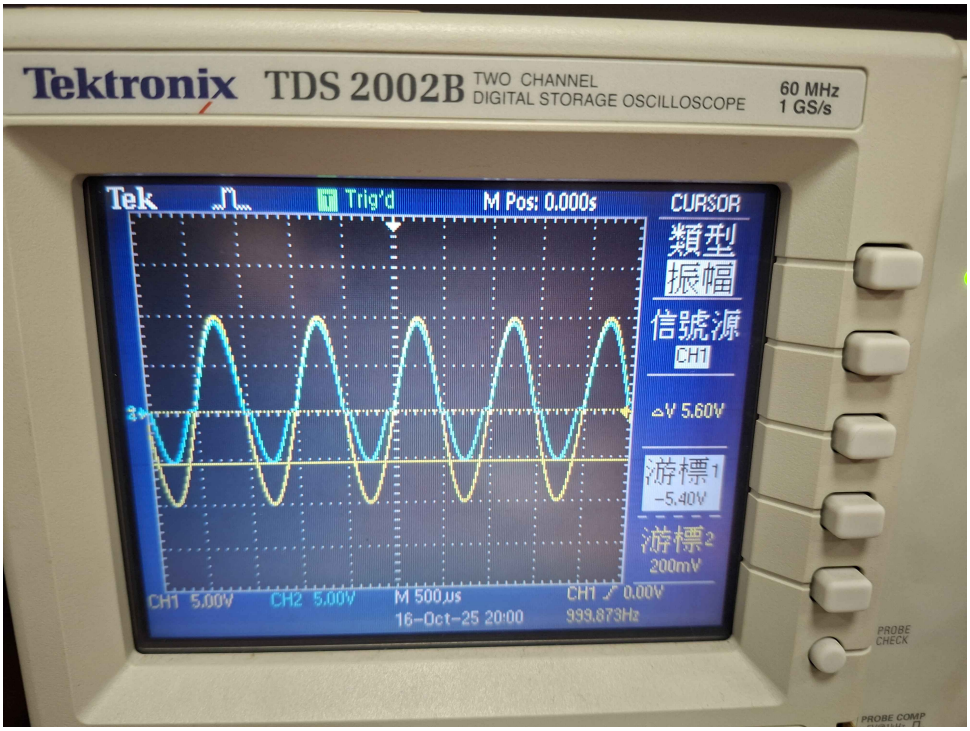


图 4: the output waveform of zener diode with 1k resistance

### 1.3 $V_D$and $V_Z$

1. For Si diode, since CH1's peak voltage is 6.1V and CH2's peak voltage is 5.4V, we can estimate the cut-in voltage $V_D$ as: 6.1V - 5.4V = 0.7V

2. For zener diode, since in the negative half cycle, the peak voltage difference is about 5.6V, we can estimate the zener voltage $V_Z$ as: 5.6V

## 2 Voltage Regulator

### 2.1 setup

- $R_1 = 10\text{k}\Omega$
- $V_i = 9\text{V DC}$

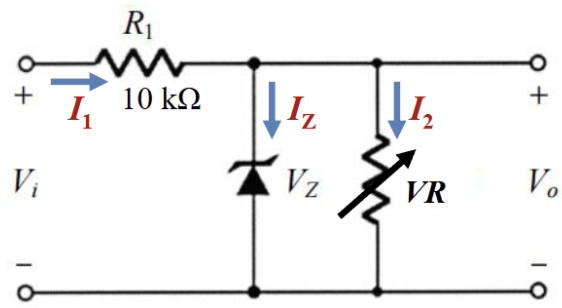


图 5: the circuit diagram for the second experiment

## 2.2 Experiment result

| $R_L$ | $I_1$ | $I_Z$ | $I_2$ | $V_o$ |
|---|---|---|---|---|
| 2kΩ | 0.758mA | 0mA | 0.758mA | 1.5V |
| 50kΩ | 0.477mA | 0.391mA | 0.085mA | 4.27V |
| 400kΩ | 0.472mA | 0.462mA | 0.011mA | 4.32V |
| 800kΩ | 0.472mA | 0.467mA | 0.004mA | 4.32V |

表 1: Output voltage and zener current for different load resistances

## 2.3 conclusion

- When $R_L$ is small (about 2kΩ), $I_Z$ is 0, indicating that the zener diode is not regulating the voltage. so the output voltage is about $\frac{2k}{10k+2k} \cdot 9V = 1.5V$
- As $R_L$ increases, the output voltage approaches the zener voltage, the output voltage is about 4.3V