Electronics Experiment Report: Diode Characteristics

B13901165張勝勛, B13901087洪秉軒

2025 年 11 月 16 日

1 Experiment setup

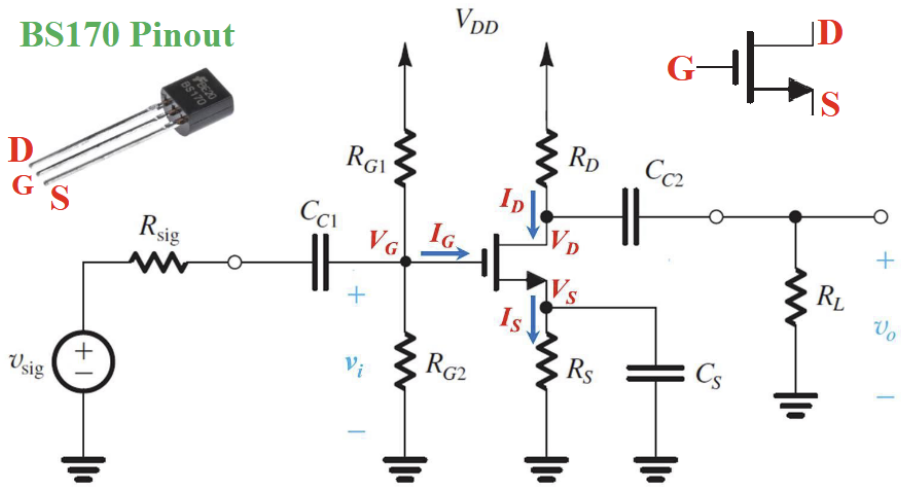

图 1: Experiment setup

In this experiment, we set up a Common Source Amplifier circuit using an N-channel MOSFET. Our goal is to analyze the DC and AC characteristics of the amplifier, including voltage, current and gain.

The parameters used in the experiment are as follows:

Parameter	Value
V_{DD}	15V
R_{G1}, R_{G2}	1MΩ
R_D, R_S, R_L	10kΩ
R_{sig}	10kΩ
C_{C2}, C_S	0.1μF(104)
C_{C1}	0.01μF(103)
V_{sig}	200mV (AC)
Frequency	200Hz to 500kHz

表 1: Experiment Parameters

2 DC result

2.1 Measured Values

Parameter	Measured Value	Description
V_G	7.188V	about half of V_{DD} = 15V/2 = 7.5V
V_D	9.59V	higher than V_G, working at saturation region
V_S	5.408V	
I_G	0.002mA	about 0 since no current at gate
I_D	0.544mA	same as I_S
I_S	0.544mA	same as I_D

表 2: DC Measurement Results

3 AC result

In this section, we present the voltage gain results of the amp at $f = 1kHz$.

Condition	Measured Gain
With C_S, v_o vs v_{sig}	2.03
With C_S, v_o vs v_i	2.21
Without C_S, v_o vs v_{sig}	0.43

表 3: AC Measurement Results at $f = 1kHz$

4 Pictures

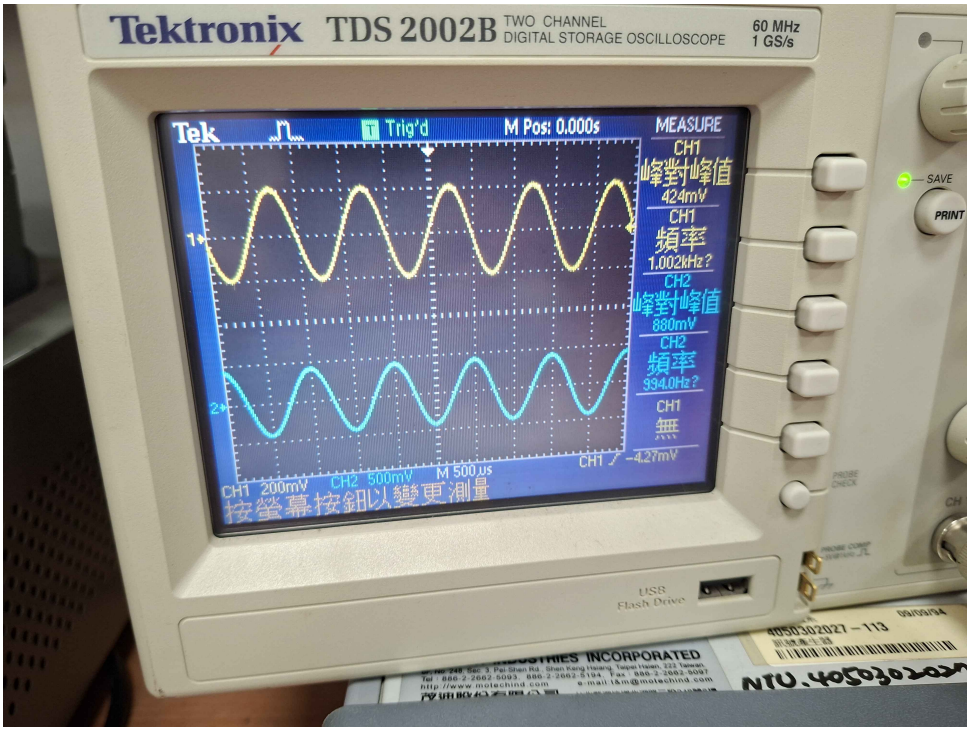

图 2: v_o/v_{sig} with C_s

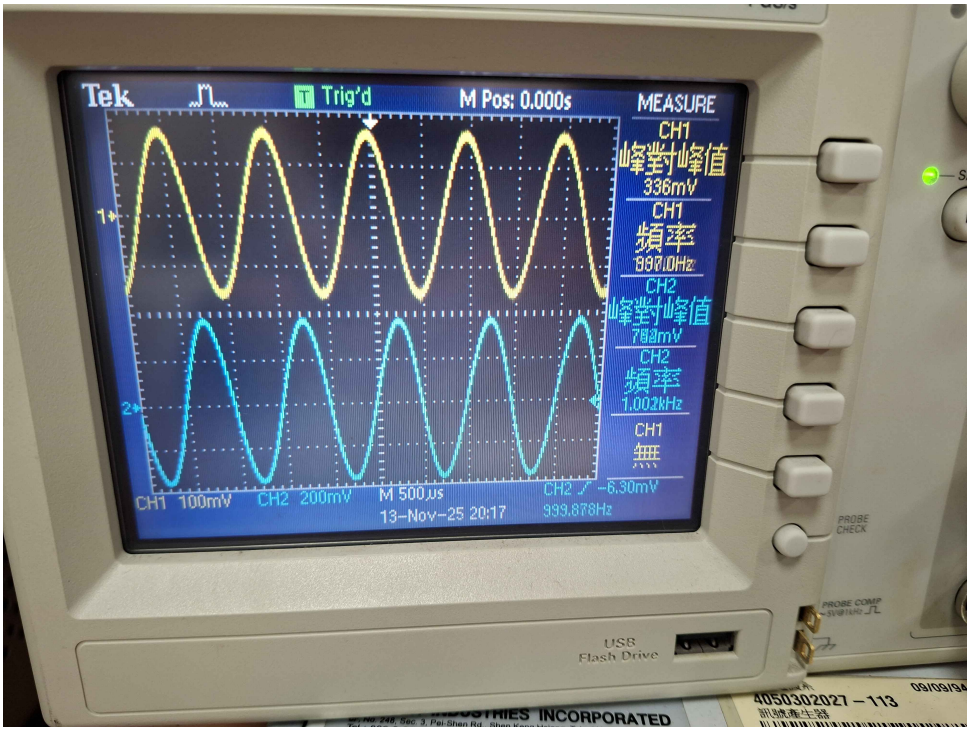

图 3: v_o/v_i with C_s

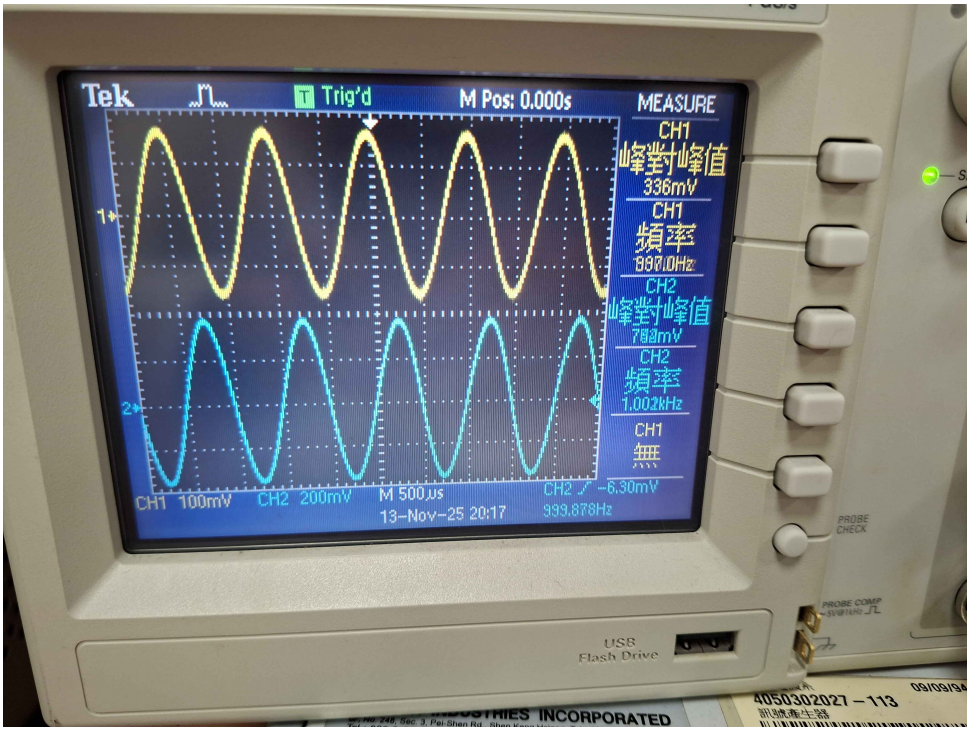

图 4: v_o/v_{wig} w/o C_s