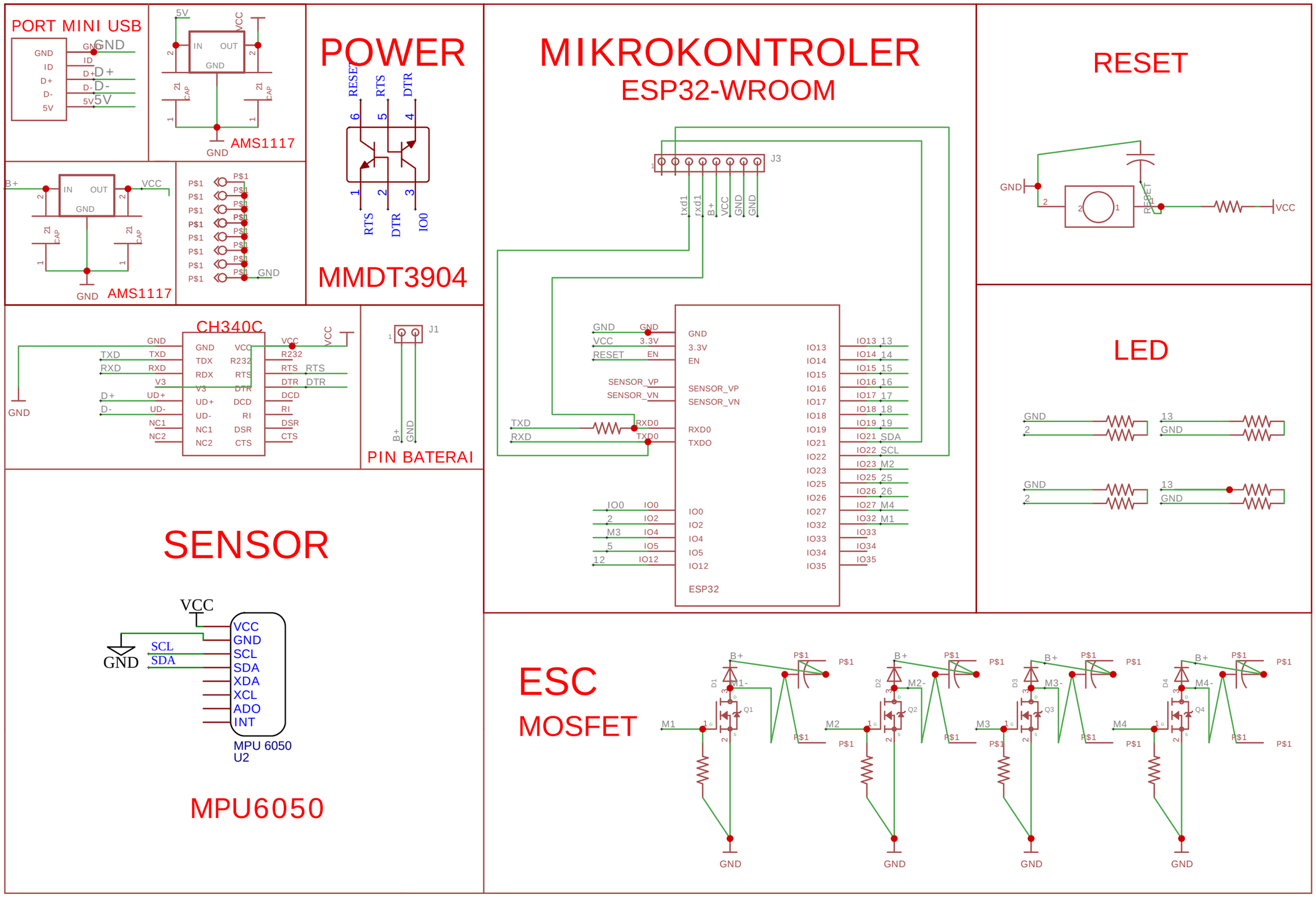

TITLE: Quadcopter ESP32	REV: 1.0
Company: Universitas Negeri Yogyakarta	Sheet: 1/1
Date: 2023-09-06 Drawn By: Mugiwara Pirates	