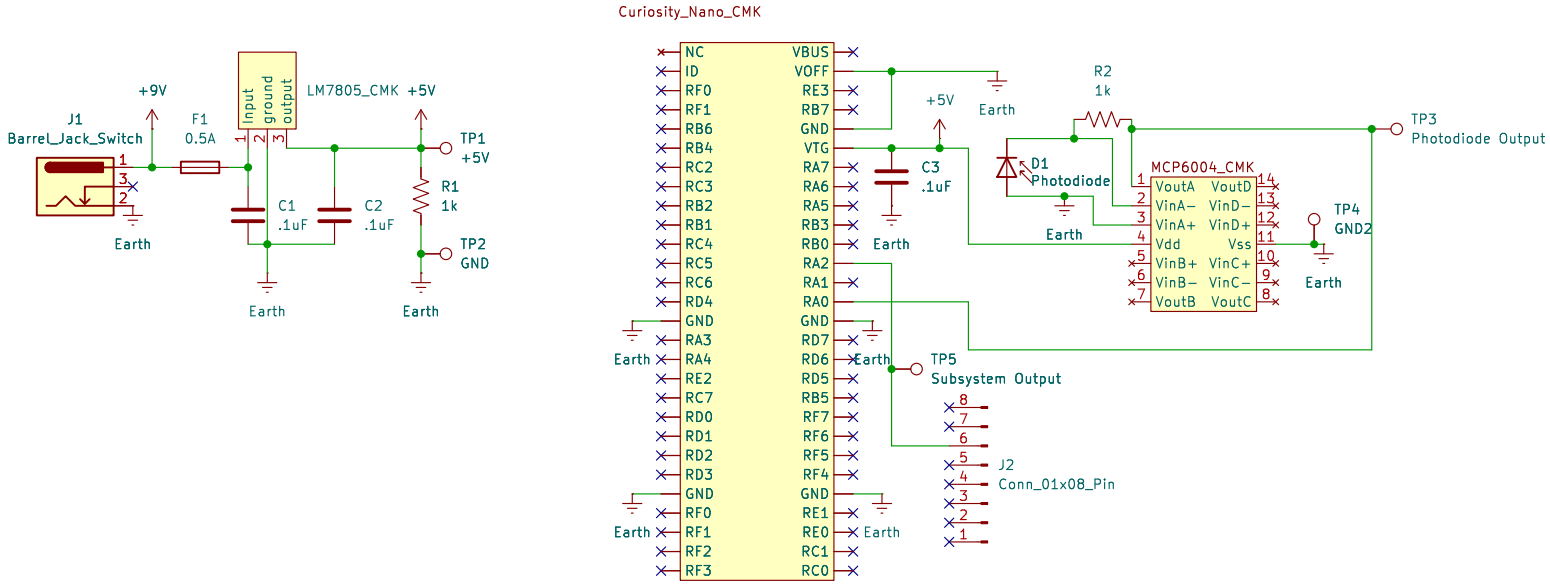

Team 106

Sheet: /
File: EGR330_MotorDriverDesign.kicad_sch

Title: Photodiode Schematic

Size: A4	Date: 2025-09-26	**Rev: 0**
KiCad E.D.A. 9.0.4		Id: 1/1