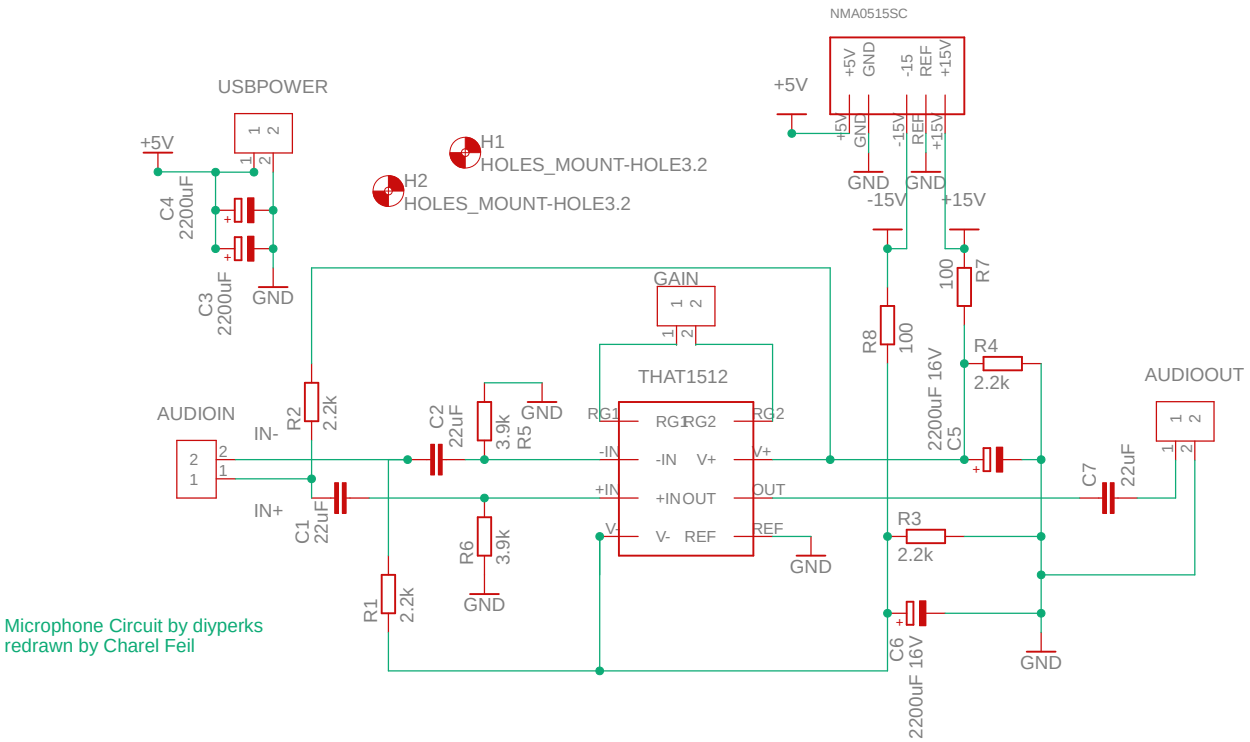

Microphone Circuit by diyperks
redrawn by Charel Feil