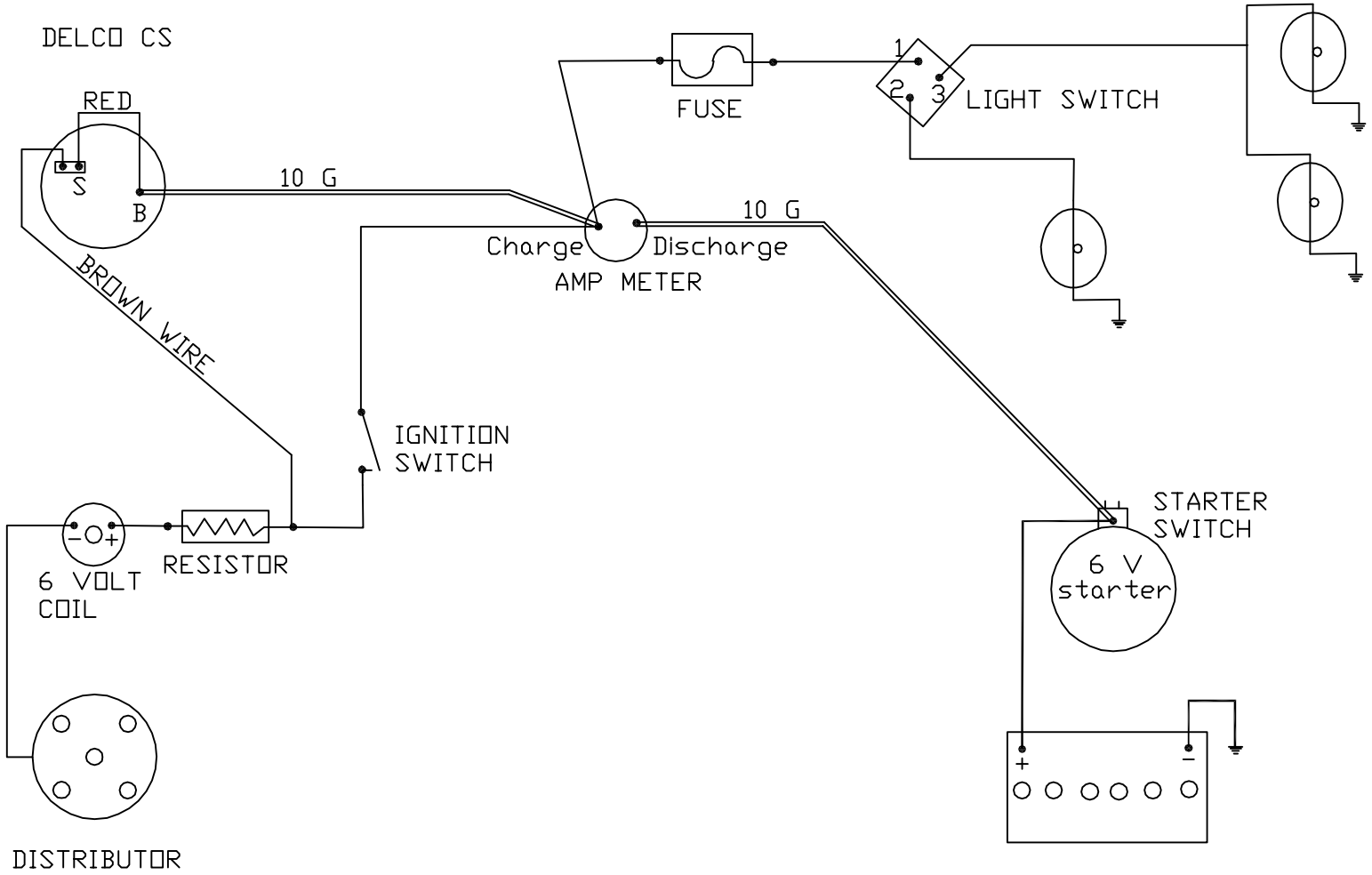

FARMALL CUB W/DELCO CS ALTERNATOR
6 VOLT COIL AND RESISTOR

Charlie's Repair
56989 220th ST
Austin, MN 55912
507-438-8172
www.charliesrepair.com