```
from machine import Pin
import time
import neopixel
np = neopixel.NeoPixel(Pin(4), 16)
```

No. of LEDs.

```
# name[INDEX] = (R,G,B)
# For red (255,0,0), For Green(0,255,0)
  For blue (0,0,255)
np[1] = (255,0,0)
np[2] = (0,255,0)
np[3] = (0,0,255)
np.write()
```

define np[0] → np[15] for all LEDs to light up.

3/2/26

## GENERATION of random no. every second

```
import random
import time
while True:
    r = random.randint(1,10)
    time.sleep(1)
    print(r)
```

## MANUAL looping and blinking of neopixel

```
from machine import Pin
import time
import neopixel
np = neopixel.NeoPixel(Pin(12),16)
```

```
while True:
    np[0] = (255,0,0)
    time.sleep(0.25)
    np.write()
    np[1] = (0,255,0)
    time.sleep(0.25)
    np.write()
    np[2] = (255,0,0)
    time.sleep(0.25)
    np.write()
    np[3] = (0,255,0)
    time.sleep(0.25)
    np.write()
    np[4] = (255,0,0)
    time.sleep(0.25)
    np.write()
    np[5] = (0,255,0)
    time.sleep(0.25)
    np.write()
    np[6] = (255,0,0)
    time.sleep(0.25)
    np.write()
    np[7] = (0,255,0)
    time.sleep(0.25)
    np.write()
    np[8] = (255,0,0)
    time.sleep(0.25)
    np.write()
    np[9] = (0,255,0)
    time.sleep(0.25)
    np.write()
    np[10] = (255,0,0)
    time.sleep(0.25)
    np.write()
    np[11] = (0,255,0)
    time.sleep(0.25)
    np.write()
    np[12] = (255,0,0)
    time.sleep(0.25)
    np.write()
    np[13] = (0,255,0)
    time.sleep(0.25)
    np.write()
    np[14] = (255,0,0)
    time.sleep(0.25)
    np.write()
    np[15] = (0,255,0)
    time.sleep(0.25)
    np.write()
    np[15] = (0,0,0)
    time.sleep(0.25)
    np.write()
    .
    .
    .
    np[0] = (0,0,0)
    time.sleep(0.25)
    np.write()
```

## for function

```
for i in range (5):
    print(i)
```

Output

0
1
2
3
4

## Using for function to loop NeoPixel

```
from machine import Pin
import time
import neopixel
np = neopixel.NeoPixel(Pin(12),16)
while True:
    for i in range(0,16,1):
        print (i)
        np[i] = (255,0,0)
        time.sleep (0.25)
        np.write()
        np[i+1] = (0,255,0)
        time.sleep (0.25)
        np.write()
```

## Using random function to switch on random LEDs

```
from machine import Pin
import time
import neopixel
import random
np = neopixel.NeoPixel (Pin (12), 16)
while True:
    i = random.randint(1,16)
    time.sleep(1)
    print(i)
    np[i] = (255,0,0)
    time.sleep (0.25)
    np.write()
    np[i+1] = (0,255,0)
    time.sleep (0.25)
    np.write()
```

(*) Arantika wrote this statement under the "while True" loop and her LEDs kept switching off after every loop. That's wz, this statement (variable definition) kept ~~happening~~ looping.

re-definition of variable.

this isn't recommended as it (↑) load on the device (large). ∴ constant variable definition OUTSIDE the loop.

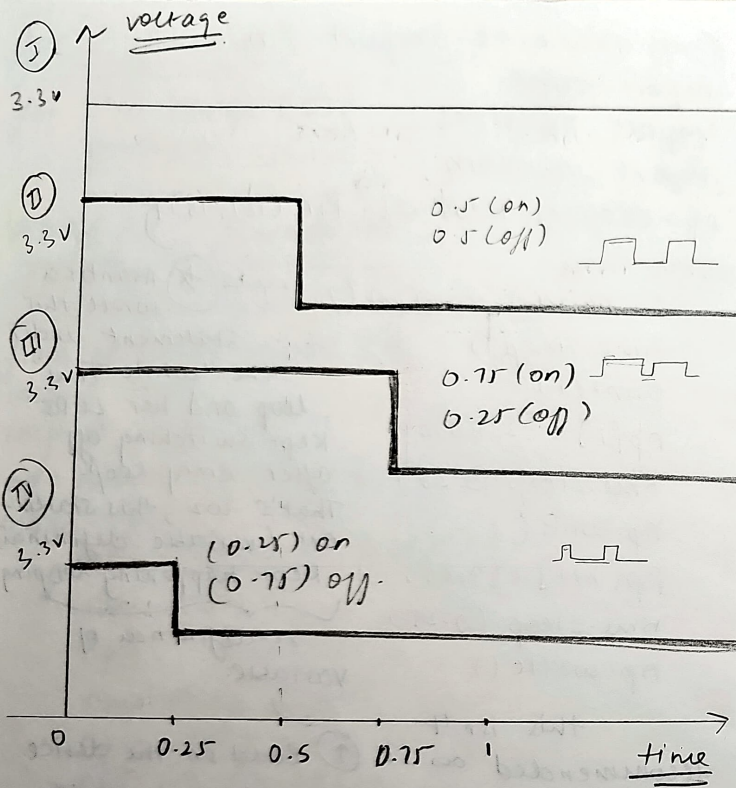


Pulse width modulation

↓

varying the width of the LED

↓

a "chapter" from machine.

## Duty cycle

$$\text{Duty cycle\%} = \frac{\text{On time}}{\text{On time + Off time}} \times 100$$

PWM in MicroPython (ESP32)

| Duty cycle | Value |
|---|---|
| 100% | 1023 |
| 75 | 768 |
| 50 | 512 |
| 25 | 256 |
| 0 | 0 |

PWM resolution (ESP32) = 10 bit ($2^{10} = 1024$)

FREQUENCY ⇒ no. of repitions per unit time.

CODE

```
from machine import Pin, PWM
import time
led = PWM(Pin(4))
led.freq(500)
led.duty(768)
```

← PWM default is Pin.OUT (contrasting to Pin function)

← giving frequency of 500 Hz

← LED blinks (duty cycle of 50%)

# led.duty(256) LED blinks slower as compared to 50% (duty cycle of 25%)

# led.duty(768) LED blinks faster as compared to 50% (duty cycle of 75%)

# l.duty (1023) LED remains on (duty cycle of 100%)
# l.duty (0) LED remains off (duty cycle of 0%)
# Keep constant frequency of 500-600 Hz.
# decreasing the value of duty cycle dims the LED further
(decreases intensity of light)

$\boxed{\text{duty cycle} \propto \text{intensity}}$

## ACTIVITY

Gradually increase LED brightness to MAX level.

```
from machine import Pin, PWM
import time
l = PWM(Pin(4))
l.freq(500)
while True:
    for i in range(0,1023):
        l.duty(i)
        time.sleep(0.001)
```

Gradually decrease LED brightness to MIN level

```
    for i in range(1023,0,-1):
        l.duty(i)
        time.sleep(0.001)
```

# put both together to ↑ & ↓ simultaneously

# HOW to dump code in ESP 32

→ File → SaveAs → MicroPython device
→ Save file name as: "main.py"

## ACTIVITY

Use components: Push Button, Capacitive Touch Buzzer, LED, NeoPixel.

Concept:
Disco light :→ NeoPixel, Buzzer.
→ Push Button, Capacitive touch.

No capacitive touch → White light.
Capacitive touch → NeoPixel starts a vibrant pattern.

~~Buzzer~~ Push button → Buzzer?

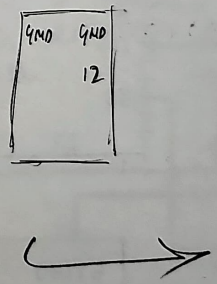

Rough

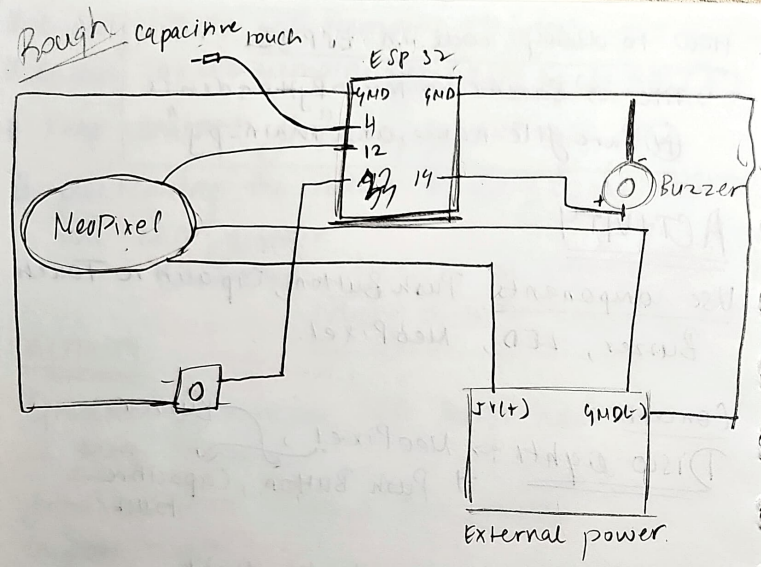


## Better Circuit

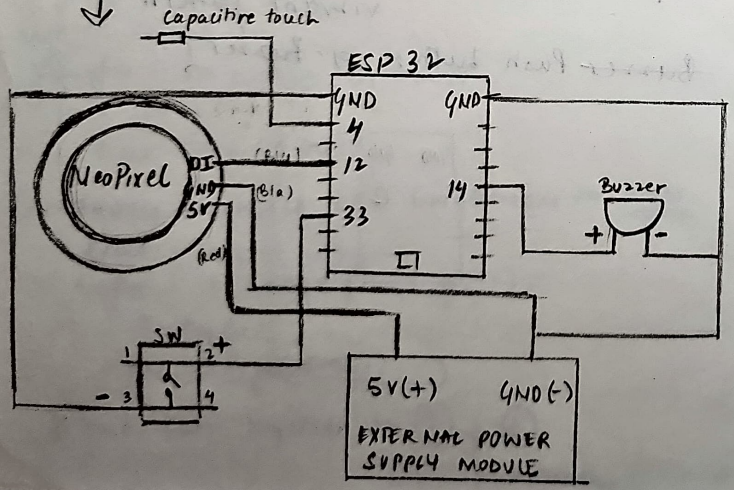


# IR Obstacle Detection Sensor

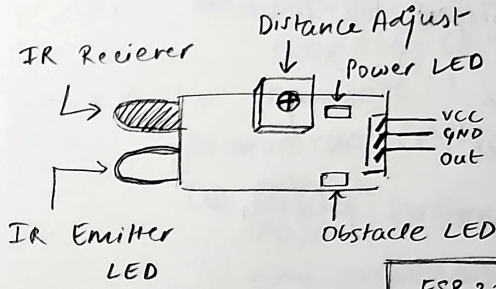


| ESP 32 | Sensor |
|---|---|
| 3.3V | VCC |
| GND | GND |
| GPIO (13/14/25) | Out |

Infrared LED emits a light and gets reflected back when an obstacle is placed in front of it

**Range = 2 - 30 cm**

Value remains 1 until ~~object~~ obstacle is placed ⇒ displays 0.

## ACTIVITY [CODE]

```
from machine import Pin, TouchPad
import time
import random
import neopixel
np = neopixel.NeoPixel(Pin(12), 16)
t = TouchPad(Pin(4))
while True:
    tv = t.read()
    time.sleep(0.4)

    if tv < 300:
        print("hi")
        for j in range(0,4,1):
            print(j)
            np[j] = (255,51,53)
            time.sleep(0.1)
            np.write()
        for k in range(4,8,1):
            print(k)
            np[k] = (51,0,255)
            time.sleep(0.1)
            np.write()
        for l in range(8,12,1):
            print(l)
```

## ACTIVITY [CODE]

```
            np[l] = (255,0,51)
            time.sleep(0.1)
            np.write()
        for m in range(12,16,1):
            print(m)
            np[m] = (0,255,255)
            time.sleep(0.1)
            np.write()
        for n in range(0,16,1):
            print(n)
            np[n] = (255,51,153)
            time.sleep(0.05)
            np.write()
        for o in range(0,16,1):
            print(o)
            np[o] = (51,0,255)
            time.sleep(0.05)
            np.write()
        for p in range(0,16,1):
            print(p)
            np[p] = (255,0,51)
            time.sleep(0.05)
            np.write()
```

```
for q in range(0,16,1):
        print(q)
        np[q] = (0,255,255)
        time.sleep(0.05)
        np.write()
    print("Pin 4 is touched")

else:
    for i in range(0,16,1):
        print(i)
        np[i] = (255,255,255)
        np.write()
        print("Not touched")
```

---

WEEK 5.