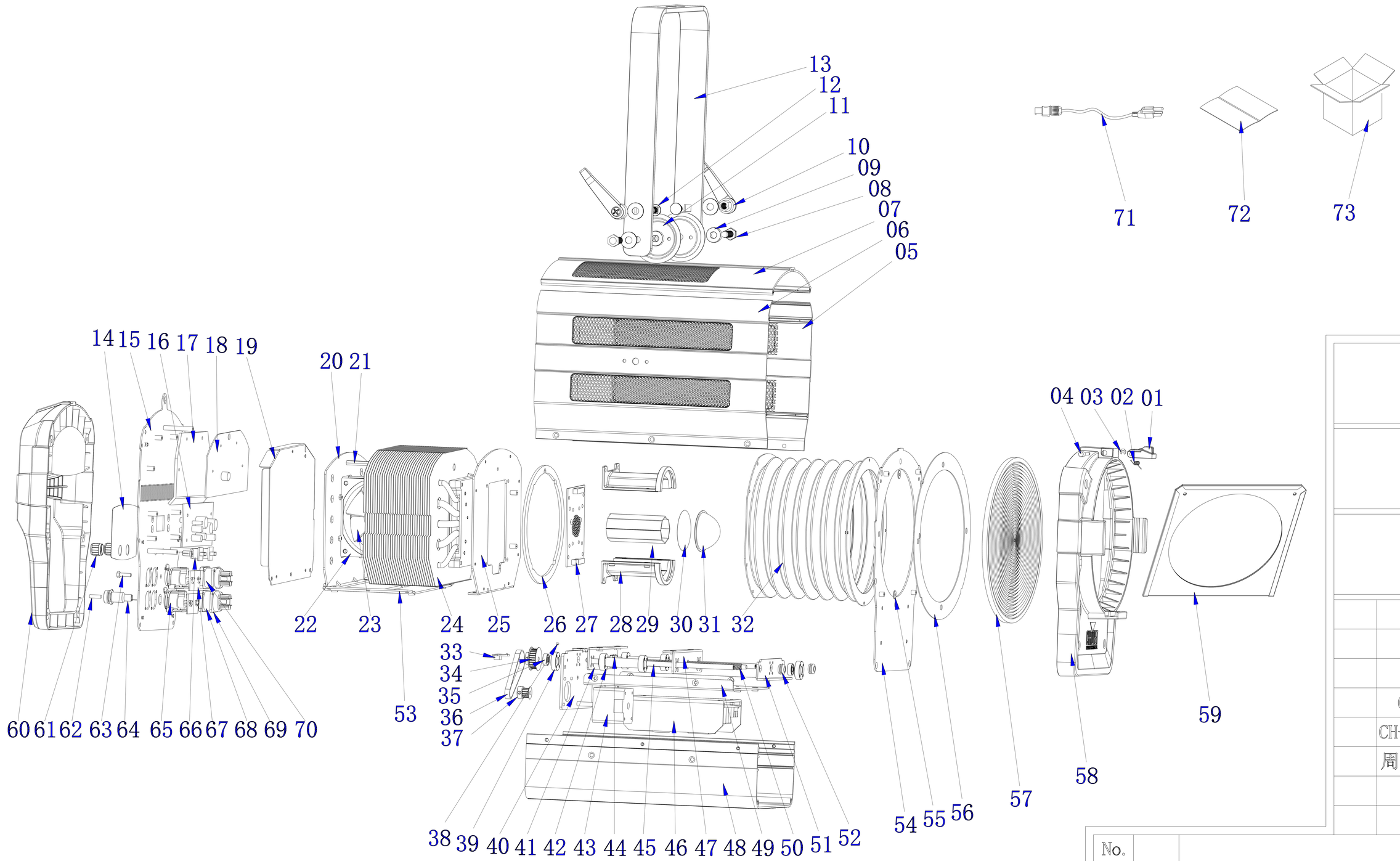

	1100800018
	CH-F915 RGBAL
	CH-F915 RGBAL-101
周子轩	2017-08-08

No.		
1		
2		
3		
4		

EK-QR-RD-024-(--)

EXPLODED DIAGRAM REF STATIC	FIXTURE	PART NUMBER	DESCRIPTION	URL STATIC
1	OVATIONF915VW	PTJ4020100174	LOCK (BOM#1)	https://chauvetvip.com/products/PTJ4020100174_LOCK
2	OVATIONF915VW	PTJ3021600094	SPRING (BOM#2)	https://chauvetvip.com/products/PTJ3021600094_SPRING
3	OVATIONF915VW	PTJ3021600102	C-RING (BOM#3)	https://chauvetvip.com/products/PTJ3021600102_C-RING
4	OVATIONF915VW	PTJ3030800007	SAFETY PIN (BOM#4)	https://chauvetvip.com/products/PTJ3030800007_SAFETY-PIN
5	OVATIONF915VW	PTJ4010303822A	SIDE PANEL ASSEMBLY 1 (BOM#5)	
6	OVATIONF915VW	PTJ4010303823A	SIDE PANEL ASSEMBLY 2 (BOM#6)	
7	OVATIONF915VW	PTJ4010303824A	TOP COVER ASSEMBLY (BOM#7)	
8	OVATIONF915VW	PTJ3021700587	HM SCREW (BOM#8)	https://chauvetvip.com/products/PTJ3021700587_HM-SCREW
9	OVATIONF915VW	PTJ3021700452	RING USE FOR BRACKET (BOM#9)	https://chauvetvip.com/products/PTJ3021700452_RING-(BOM#21)
10	OVATIONF915VW	PTF1340110771	M8 BRACKET ADJUSTMENT KNOB/SHANK (B	https://chauvetvip.com/products/PTF1340110771_M8-HANDLE-(BOM#35)
11	OVATIONF915VW	PTJ4010302483	SEMI-CIRCLE METAL PART (BOM#11)	https://chauvetvip.com/products/PTJ4010302483_HANGING-BRACKET-SLICE
12	OVATIONF915VW	PTJ3021700412	LARGE INSIDE SCREW HANGING BRACKET(BO	https://chauvetvip.com/products/PTJ3021700412_SCREW-INSIDE-HANGING-BRACKET-(BOM#5)
13	OVATIONF915VW	PTJ4010303821	HANGING BRACKET (BOM#13)	https://chauvetvip.com/products/PTJ4010303821_HANGING-BRACKET
14	OVATIONF915VW	PTJ3050802396	DISPLAY STICKER (BOM#14)	
15	OVATIONF915VW	PTJ4010401980	REAR (BOM#15)	
16	OVATIONF915VW	PTJ2020202305	MPCB (BOM#16)	https://chauvetvip.com/products/PTJ2020202305_MPCB
17	OVATIONF915VW	PTJ4010303829	DRIVER HOLDER (BOM#17)	
18	OVATIONF915VW	PTJ2020202218	DRIVER PCB (BOM#18)	https://chauvetvip.com/products/PTJ2020202218_DRIVER-PCB
19	OVATIONF915VW	PTJ4010303734	BARNDOOR USE ON REAR (BOM#19)	
20	OVATIONF915VW	PTJ4010303726	HEAT SINK PLATE (BOM#20)	https://chauvetvip.com/products/PTJ4010303726_HEAT-SINK-PLATE
21	OVATIONF915VW	PTJ3030100218	CONNECTER (BOM#21)	
22	OVATIONF915VW	PTJ4010103578	FAN HOLDER (BOM#22)	
23	OVATIONF915VW	PTJ3020900072	DC FAN (BOM#23)	https://chauvetvip.com/products/PTJ3020900072_DC-FAN
24	OVATIONF915VW	PTJ4010103625	HEAT SINK (BOM#24)	https://chauvetvip.com/products/PTJ4010103625_HEAT-SINK
25	OVATIONF915VW	PTJ4010303826A	HEAT HOLDER (BOM#25)	
26	OVATIONF915VW	PTJ3021700946	FOAM (BOM#26)	
27	OVATIONF915VW	PTJ2020202136	LED 5 PCB (BOM#27)	https://chauvetvip.com/products/PTJ2020202136_LED-5-PCB
28	OVATIONF915VW	PTJ4010103588	LIGHT TUBE (BOM#28)	
29	OVATIONF915VW	PTJ3020200305	MIRROR (BOM#29)	https://chauvetvip.com/products/PTJ3020200305_MIRROR
30	OVATIONF915VW	PTJ3020300311	FILTER FRAME (BOM#30)	https://chauvetvip.com/products/PTJ3020300311_FILTER-FRAME
31	OVATIONF915VW	PTJ3020100388	ASPHERIC SURFACE LENS (BOM#31)	https://chauvetvip.com/products/PTJ3020100388_ASPHERIC-SURFACE-LENS
32	OVATIONF915VW	PTJ3021100027	TUBES (BOM#32)	
33	OVATIONF915VW	PTJ2020200635	HALL ELEMENT LOCATER F (BOM#33)	https://chauvetvip.com/products/PTJ2020200635_HALL-ELEMENT-LOCATER
34	OVATIONF915VW	PTJ3030300049	DRIVING GEAR (BOM#34)	
35	OVATIONF915VW	PTJ3020500049	BEARING (BOM#35)	https://chauvetvip.com/products/PTJ3020500049_BEARING
36	OVATIONF915VW	PTJ3020600053	SYNCHRONOUS BELT (BOM#36)	https://chauvetvip.com/products/PTJ3020600053_SYNCHRONOUS-BELT
37	OVATIONF915VW	PTJ3030300028	XY DRIVING WHEEL (BOM#37)	
38	OVATIONF915VW	PTJ3022200009	MAGNET (BOM#38)	https://chauvetvip.com/products/PTJ3022200009_MAGNET
39	OVATIONF915VW	PTJ3030200023	FLANGE (BOM#39)	https://chauvetvip.com/products/PTJ3030200023_FLANGE
40	OVATIONF915VW	PTJ4010303732	SCREW FIXATION PLATE 2 (BOM#40)	
41	OVATIONF915VW	PTJ4010303730	PLAIN BEARING HOLDER 1 (BOM#41)	https://chauvetvip.com/products/PTJ4010303730_PLAIN-BEARING-HOLDER-1
42	OVATIONF915VW	PTJ3030100219	BEARING COVER (BOM#42)	
43	OVATIONF915VW	PTJ3021000084	STEPPER MOTOR (BOM#43)	
44	OVATIONF915VW	PTJ3030600020	SLIDER 2 (BOM#44)	
45	OVATIONF915VW	PTJ3030600032	FOCUSING LEVER (BOM#45)	https://chauvetvip.com/products/PTJ3030600032_FOCUSING-LEVER
46	OVATIONF915VW	PTJ3020400263	POWER SUPPLY (BOM#46)	https://chauvetvip.com/products/PTJ3020400263_POWER-SUPPLY
47	OVATIONF915VW	PTJ4010303729	PLAIN BEARING HOLDER (BOM#47)	https://chauvetvip.com/products/PTJ4010303729_PLAIN-BEARING-HOLDER
48	OVATIONF915VW	PTJ4010303825	HOUSING (BOM#48)	
49	OVATIONF915VW	PTJ4010303828	BASEPLATE (BOM#49)	https://chauvetvip.com/products/PTJ4010303828_BASEPLATE
50	OVATIONF915VW	PTJ3030600033	SCREW FIXATION (BOM#50)	https://chauvetvip.com/products/PTJ3030600033_SCREW-FIXATION
51	OVATIONF915VW	PTJ4010303827	SCREW FIXATION PLATE 1 (BOM#51)	https://chauvetvip.com/products/PTJ4010303827_SCREW-FIXATION-PLATE-1
52	OVATIONF915VW	PTJ3022500068	LOOP FOR FOCUSING LEVER (BOM#52)	https://chauvetvip.com/products/PTJ3022500068_LOOP-FOR-FOCUSING-LEVER
53	OVATIONF915VW	PTJ4010303727B	CONNECTER PANEL (BOM#53)	
54	OVATIONF915VW	PTJ4010303724	FRONTPLATE (BOM#54)	
55	OVATIONF915VW	PTJ3021700679	PA RING (BOM#55)	
56	OVATIONF915VW	PTJ3021700898	RING FOR THREAD LENS (BOM#56)	
57	OVATIONF915VW	PTJ3020100387	THREAD LENS (BOM#57)	https://chauvetvip.com/products/PTJ3020100387_thREAD-LENS
58	OVATIONF915VW	PTJ4020100198	FRONT COVER (BOM#58)	https://chauvetvip.com/products/PTJ4020100198_FRONT-COVER
59	OVATIONF915VW	PTJ4010303080A	GEL FRAME (BOM#59)	https://chauvetvip.com/products/PTJ4010303080A_GEL-FRAME
60	OVATIONF915VW	PTJ4020100199	HOUSING (BOM#60)	
61	OVATIONF915VW	PTJ3030900007B	ROTARY KNOB (BOM#61)	https://chauvetvip.com/products/PTJ3030900007B_ROTARY-KNOB
62	OVATIONF915VW	3.15AMPGMA	T3.15AL250V FUSE (BOM#62)	https://chauvetvip.com/products/3.15AMPGMA_FUSE
63	OVATIONF915VW	PTJ3021700154	HM SCREW USE ON UNDERSCORE (BOM	https://chauvetvip.com/products/PTJ3021700154_HM-SCREW
64	OVATIONF915VW	PTJ3027001001	Panel mount fuse holder (BOM#64)	https://chauvetvip.com/products/PTJ3027001001_FUSE-HOLDER
65	OVATIONF915VW	PTJ2010033700	DMX XLR SOCKET PCB(5PIN) (BOM#65)	https://chauvetvip.com/products/PTJ2010033700_5-PINS-DMX-XLR-SOCKET
66	OVATIONF915VW	PTJ2020201971	POTENTIOMETER PLATE (BOM#66)	https://chauvetvip.com/products/PTJ2020201971_POTENTIOMETER-PLATE
67	OVATIONF915VW	PTJ2010325000	DMX XLR SOCKET PCB (3PIN) (BOM#67)	https://chauvetvip.com/products/PTJ2010325000_DMX-XLR-SOCKET-PCB
68	OVATIONF915VW	PTF1001002202	POWER OUT SOCKET (BOM#68)	https://chauvetvip.com/products/PTF1001002202_POWER-OUTPUT-PLUG
69	OVATIONF915VW	PTJ4010302041	COVER USE ON POWER SOCKET (BOM#69)	
70	OVATIONF915VW	PTF1001002302	POWER IN SOCKET (BOM#70)	https://chauvetvip.com/products/PTF1001002302_POWER-INPUT-PLUG-(BLUE)
71	OVATIONF915VW	PTF2700003804	NEUTRIK US POWER CABLE 1.5M - 5FT (P	https://chauvetvip.com/products/PTF2700003804_Complete-Neutrix-power-cable
N/A	OVATIONF915VW	UPLOAD03	UPLOAD03 ***Order from Location 1***	
N/A	OVATIONF915VW	PTJ2020201330	Display PCB	https://chauvetvip.com/products/PTJ2020201330_DISPLAY-PCB
N/A	OVATIONF915VW	PTJ5000000066	FRONT COVER ASSEMBLY	https://chauvetvip.com/products/PTJ5000000066_FRONT-COVER-AssEMBLY