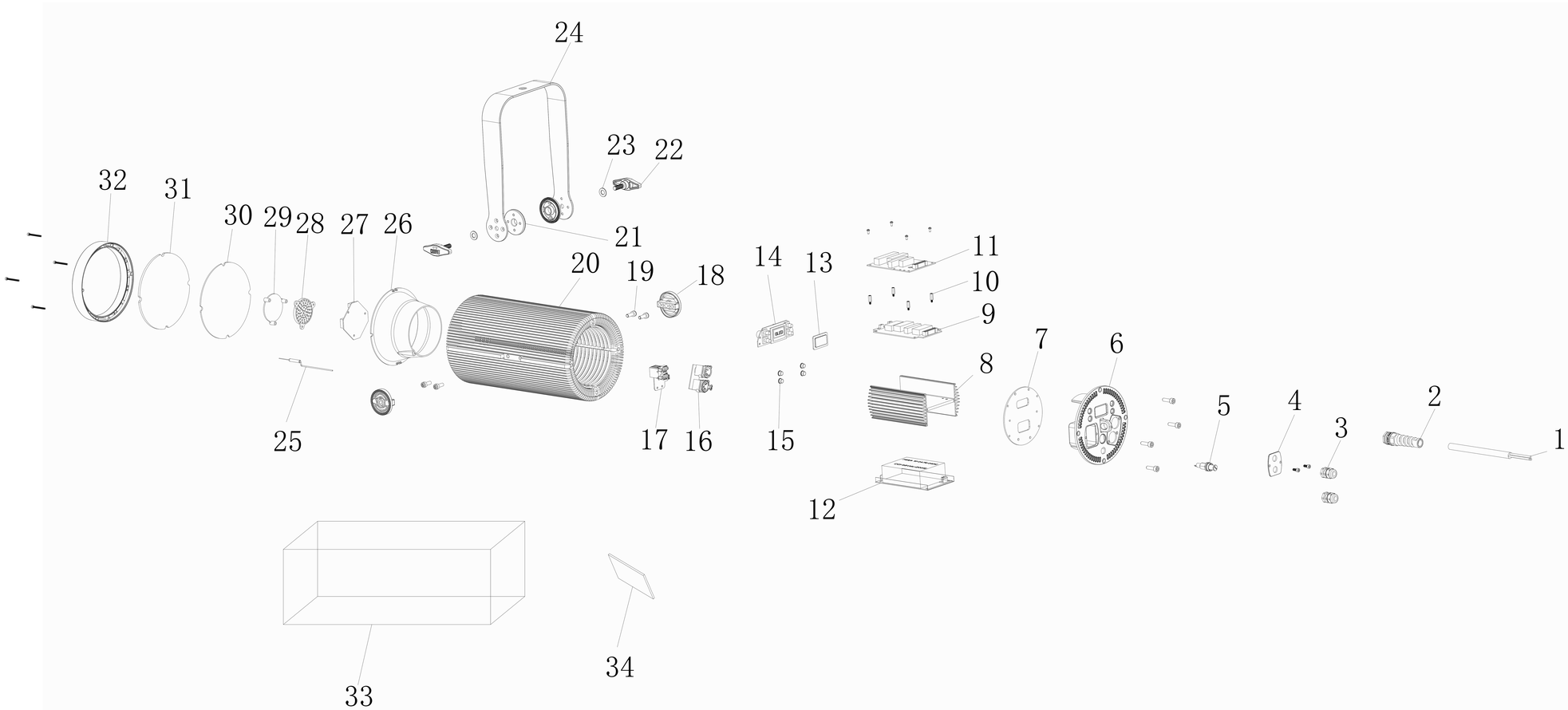

	1100100395
	CH-D180
	CH-D180
	CH-D180-101
	2017-04-06

No.			
1			
2			
3			
4			

EK-QR-RD-024-(--)

EXPLODED DIAGRAM REF STATIC	FIXTURE	PART NUMBER	DESCRIPTION	URL STATIC
1	OVATIONH605FCBLK	PTJ3040700444	POWER CABLE (BOM#1)	https://chauvetvip.com/products/PTJ3040700444_POWER-CABLE
2	OVATIONH605FCBLK	PTJ3022000011	POWER CORD CONNECTOR (BOM#2)	https://chauvetvip.com/products/PTJ3022000011_POWER-CORD-CONNECTOR
3	OVATIONH605FCBLK	PTJ3022000006	DMX CONNECTOR USE ON SIGNAL LINE (BOM	https://chauvetvip.com/products/PTJ3022000006_IP-CONNECTOR-FOR-REAR
4	OVATIONH605FCBLK	PTJ4010401845	CONNECTOR COVER (BOM#4)	https://chauvetvip.com/products/PTJ4010401845_CONNECTOR-COVER
5	OVATIONH605FCBLK	PTJ3027001001	Panel mount fuse holder (BOM#5)	https://chauvetvip.com/products/PTJ3027001001_FUSE-HOLDER
6	OVATIONH605FCBLK	PTJ4010401844	REAR COVER (BOM#6)	https://chauvetvip.com/products/PTJ4010401844_REAR-COVER
7	OVATIONH605FCBLK	PTJ4010103301B	POWER HEAT PLATE (BOM#7)	
8	OVATIONH605FCBLK	PTJ4010103300	HEAT SINK (BOM#8)	
9	OVATIONH605FCBLK	PTJ2020202226	DRIVER PCB (BOM#9)	https://chauvetvip.com/products/PTJ2020202226_DRIVER-PCB
10	OVATIONH605FCBLK	PTJ3030100042	STANDOFF (BOM#10)	
11	OVATIONH605FCBLK	PTJ2020202137A	MPCB (BOM#11)	https://chauvetvip.com/products/PTJ2020202137A_MPCB
12	OVATIONH605FCBLK	PTJ3020400254	POWER SUPPLY (BOM#12)	https://chauvetvip.com/products/PTJ3020400254_POWER-SWITCH
13	OVATIONH605FCBLK	PTJ3020200064	DISPLAY CLEAR LENS (BOM#13)	
14	OVATIONH605FCBLK	PTJ2020202100	TOUCHING BOARD (BOM#14)	https://chauvetvip.com/products/PTJ2020202100_TOUCHING-BOARD
15	OVATIONH605FCBLK	PTJ3019001043	BUTTON COVER (BOM#15)	https://chauvetvip.com/products/PTJ3019001043_BUTTON-COVER
16	OVATIONH605FCBLK	PTJ2010033700	DMX XLR SOCKET(5PIN) (BOM#16)	https://chauvetvip.com/products/PTJ2010033700_5-PINS-DMX-XLR-SOCKET
17	OVATIONH605FCBLK	PTJ2020202050	DMX XLR SOCKET (BOM#17)	
18	OVATIONH605FCBLK	PTJ4010303411	PARTS FOR HANGING BRACKET (BOM#18)	https://chauvetvip.com/products/PTJ4010303411_PARTS-FOR-HANGING-BRACKET
19	OVATIONH605FCBLK	PTJ3020016009	CM SCREW (BOM#19)	https://chauvetvip.com/products/PTJ3020016009_CM-SCREW-(BOM#23)
20	OVATIONH605FCBLK	PTJ4010303413E	HEAT SINK ASSEMBLY (BOM#20)	
21	OVATIONH605FCBLK	PTJ4010303410	TOOTH LOCK PLATE (BOM#21)	
22	OVATIONH605FCBLK	PTJ4010302560	HANGING BRACKET KNOB (BOM#22)	https://chauvetvip.com/products/PTJ4010302560_KNOB
23	OVATIONH605FCBLK	PTJ3021700443	PLASTIC RING (BOM#23)	https://chauvetvip.com/products/PTJ3021700443_PLASTIC-RING
24	OVATIONH605FCBLK	PTJ4010303412	SPOT BRACKET (BOM#24)	https://chauvetvip.com/products/PTJ4010303412_HANGING-BRACKET
25	OVATIONH605FCBLK	PTJ3080100124	2.4G OMNI ANTERNNA (BOM#25)	https://chauvetvip.com/products/PTJ3080100124_2-d-4G-OMNI-ANTERNNA
26	OVATIONH605FCBLK	PTJ4020200351	BLOCK MASK (BOM#26)	https://chauvetvip.com/products/PTJ4020200351_BLOCK-MASK
27	OVATIONH605FCBLK	PTJ2020202011B	LED PCB (BOM#27)	https://chauvetvip.com/products/PTJ2020202011B_LED-PCB
28	OVATIONH605FCBLK	PTJ4020200368	61 REFLECT CUP (BOM#28)	
29	OVATIONH605FCBLK	PTJ3020100369C	MICROBEE LENS (BOM#29)	
30	OVATIONH605FCBLK	PTJ3020100370	FRESNEL LENS (BOM#30)	https://chauvetvip.com/products/PTJ3020100370_FRESNEL-LENS
31	OVATIONH605FCBLK	PTJ3020200294	FRONT GLASS (BOM#31)	https://chauvetvip.com/products/PTJ3020200294_FRONT-GLAss
32	OVATIONH605FCBLK	PTJ4010303407	TOP COVER (BOM#32)	
34	OVATIONH605FCBLK	PTJ3050601163	SPECIFICATIONS (BOM#34)	
28&29	OVATIONH605FCBLK	PTJ5000000165	SOFTENING FILTER ASSEMBLY (BOM#28&29)	https://chauvetvip.com/products/PTJ5000000165_SOFTENING-FILTER-AssEMBLY
N/A	OVATIONH605FCBLK	UPLOAD03	UPLOAD03 ***Order from Location 1***	
N/A	OVATIONH605FCBLK	PTH2020303265531	WIRELESS PCB A40895G4-R_G FOR MPCB	https://chauvetvip.com/products/PTH2020303265531_wireless-pcb-A40895G4R-(BOM#108)
N/A	OVATIONH605FCBLK	PTJ2020201329	Display PCB	https://chauvetvip.com/products/PTJ2020201329_DISPLAY-PCB
N/A	OVATIONH605FCBLK	PTJ3020100368	25 DEGREE LENS	https://chauvetvip.com/products/PTJ3020100368_25-DEGREE-LENS
N/A	OVATIONH605FCBLK	PTJ3020100449	45 DEGREE LENS	https://chauvetvip.com/products/PTJ3020100449_45-DEGREE-LENS
N/A	OVATIONH605FCBLK	PTJ3020300383	80 DEGREE FILTER	https://chauvetvip.com/products/PTJ3020300383_80-DEGREE-FILTER
N/A	OVATIONH605FCBLK	PTJ3040401918A	Wire Harness from LED PCB to DRIVER PCB 1	https://chauvetvip.com/products/PTJ3040401918A_Wire-Harness-from-LED-PCB-to-DRIVER-PCB-1
N/A	OVATIONH605FCBLK	PTJ3040401920A	Wire Harness from LED PCB to DRIVER PCB 2	https://chauvetvip.com/products/PTJ3040401920A_Wire-Harness-from-LED-PCB-to-DRIVER-PCB-2
N/A	OVATIONH605FCBLK	PTJ3040401921A	Wire Harness from LED PCB to DRIVER PCB 3	https://chauvetvip.com/products/PTJ3040401921A_Wire-Harness-from-LED-PCB-to-DRIVER-PCB-3
N/A	OVATIONH605FCBLK	PTJ4020200402	EGG CRATE	https://chauvetvip.com/products/PTJ4020200402_EGG-CRATE