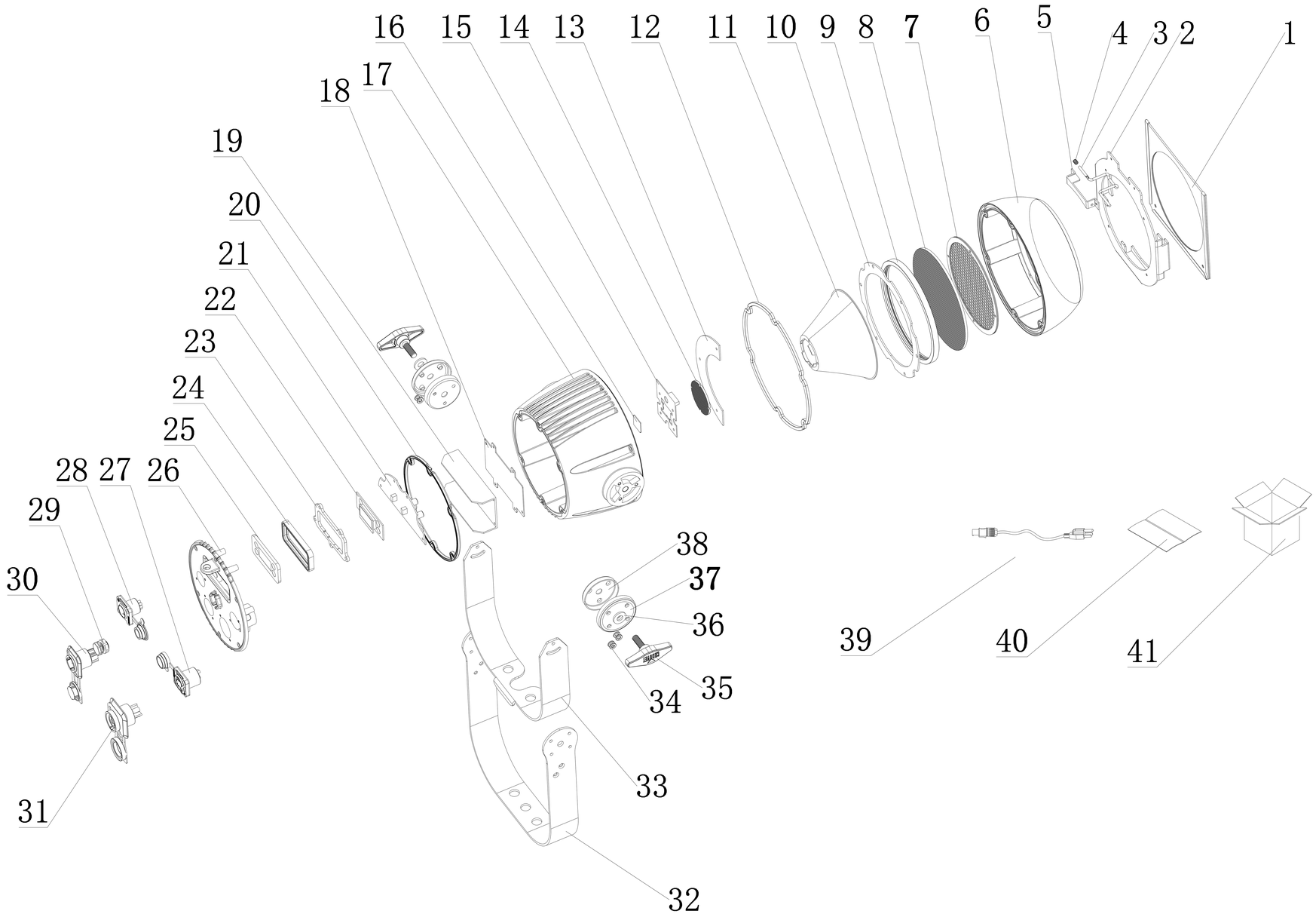

	1100600324
	CH-EB100IP
	CH-EB100IP-00
	2017.11.27

No.			
1			
2			
3			
4			

QR-RD-024

EXPLODED DIAGRAM REF STATIC	FIXTURE	PART NUMBER	DESCRIPTION	URL STATIC
1	STRIKEP38/03051454	PTF2440102422	GEL FRAME(BOM#1)	https://chauvetvip.com/products/PTF2440102422_GEL-FRAME
2	STRIKEP38/03051454	PTJ4010304053	GEL FRAME HOLDER(BOM#2)	https://chauvetvip.com/products/PTJ4010304053_GEL-FRAME-HOLDER
3	STRIKEP38/03051454	PTJ4010304054	GEL FRAME CLIP(BOM#3)	https://chauvetvip.com/products/PTJ4010304054_GEL-FRAME-CLIP(BOM#3)
4	STRIKEP38/03051454	PTJ3021600076	SRING(BOM#4)	https://chauvetvip.com/products/PTJ3021600076_SPRING
5	STRIKEP38/03051454	PTJ4010302907	PLATE USE ON THE GEL FRAME LOCK(BOM#5)	https://chauvetvip.com/products/PTJ4010302907_PLATE-USE-ON-thE-GEL-FRAME-LOCK
6	STRIKEP38/03051454	PTJ4010304055	TOP COVER(BOM#6)	
7	STRIKEP38/03051454	PTJ4010304058	GLASS COVER(BOM#7)	
8	STRIKEP38/03051454	PTJ3020100406	THREAD LENS(BOM#8)	
9	STRIKEP38/03051454	PTJ3021300180	CUSHION RUBBER FOR PMMA LEN(BOM#9)	
10	STRIKEP38/03051454	PTJ4010304051	PMMA LEN COVER(BOM#10)	
11	STRIKEP38/03051454	PTJ4010103861	REFLECT CUP(BOM#11)	https://chauvetvip.com/products/PTJ4010103861_REFLECT-CUP(BOM#11)
12	STRIKEP38/03051454	PTJ3021300178	CUSHION RUBBER FOR BASING-1(BOM#12)	
13	STRIKEP38/03051454	PTJ2020202282	DRIVER PCB(BOM#13)	https://chauvetvip.com/products/PTJ2020202282_DRIVER-PCB
14	STRIKEP38/03051454	PTJ3020100407	PC LEN(BOM#14)	
15	STRIKEP38/03051454	PTJ2020202283	LED PCB(BOM#15)	https://chauvetvip.com/products/PTJ2020202283_LED-PCB
16	STRIKEP38/03051454	PTJ3010500267	LED(BOM#16)	
17	STRIKEP38/03051454	PTJ4010304046	HOUSING(BOM#17)	
18	STRIKEP38/03051454	PTJ4010103857	POWER HOLDER(BOM#18)	
19	STRIKEP38/03051454	PTJ3020400276A	POWER SUPPLY(BOM#19)	https://chauvetvip.com/products/PTJ3020400276A_POWER-SUPPLY
20	STRIKEP38/03051454	PTJ3021300179A	CUSHION RUBBER FOR BASING-2(BOM#20)	
21	STRIKEP38/03051454	PTJ2020202281	MPCB(BOM#21)	https://chauvetvip.com/products/PTJ2020202281_MPCB
22	STRIKEP38/03051454	PTJ2020201509	DISPLAY PCB\(BOM#22)	https://chauvetvip.com/products/PTJ2020201509_DISPLAY-(BOM#32)
23	STRIKEP38/03051454	PTJ4010304057	DISPLAY COVER(BOM#23)	
24	STRIKEP38/03051454	PTJ3021300070	CUSHION RUBBER FOR DISPLAY COVER(BOM#24)	https://chauvetvip.com/products/PTJ3021300070_CUSHION-RUBBER-FOR-DISPLAY-LENS
25	STRIKEP38/03051454	PTJ3020200229	DISPLAY GLASS LENS(BOM#25)	https://chauvetvip.com/products/PTJ3020200229_DISPLAY-GLAss-LENS
26	STRIKEP38/03051454	PTJ4010402092	REAL(BOM#26)	
27	STRIKEP38/03051454	PTF1100000465	DMX CONNECTOR(5PIN,FEMALE)(BOM#27)	https://chauvetvip.com/products/PTF1100000465_5-pin-XLR-IP-connecter-(F)-with-cover
28	STRIKEP38/03051454	PTF1100000464	DMX CONNECTOR(5PIN,MALE)(BOM#28)	https://chauvetvip.com/products/PTF1100000464_5-pin-XLR-IP-connecter(M)-with-cover-(BOM#20)
29	STRIKEP38/03051454	PTF1491700004	PRESSURE COMPENSATION VALVE(BOM#29)	https://chauvetvip.com/products/PTF1491700004_Pressure-valve
30	STRIKEP38/03051454	PTF1100000468	IP POWER OUT SOCKET Assembly(BOM#30)	https://chauvetvip.com/products/PTF1100000468_IP-power-out-connecter-with-cover
31	STRIKEP38/03051454	PTJ3020800033	IP POWER IN SOCKET(BOM#31)	https://chauvetvip.com/products/PTJ3020800033_POWER-IN-SOCKET-(BOM#36)
32	STRIKEP38/03051454	PTJ4010304056	HANGING BRACKET-OUTER (BOM#32)	https://chauvetvip.com/products/PTJ4010304056_HANGING-BRACKET-OUTER
33	STRIKEP38/03051454	PTJ4010304052A	HANGING BRACKET-INNER (BOM#33)	https://chauvetvip.com/products/PTJ4010304052A_HANGING-BRACKET-INNER
34	STRIKEP38/03051454	PTJ3021700509	RING FOR BRACKET(BOM#34)	
35	STRIKEP38/03051454	PTJ4010302560	HANGING BRACKET KNOB (BOM#35)	https://chauvetvip.com/products/PTJ4010302560_KNOB
36	STRIKEP38/03051454	PTJ3021700485	RING FOR HANGING BRACKET KNOBE(BOM#36)	
37	STRIKEP38/03051454	PTJ4010301920	BRACKET HOLDER(BOM#37)	https://chauvetvip.com/products/PTJ4010301920_HANGING-BRACKET-HOLDER-SLICE-(BOM#16)
38	STRIKEP38/03051454	PTJ4010301922	TURNPLATE(BOM#38)	https://chauvetvip.com/products/PTJ4010301922_ALUMINIUM-ALLOY-SLICE