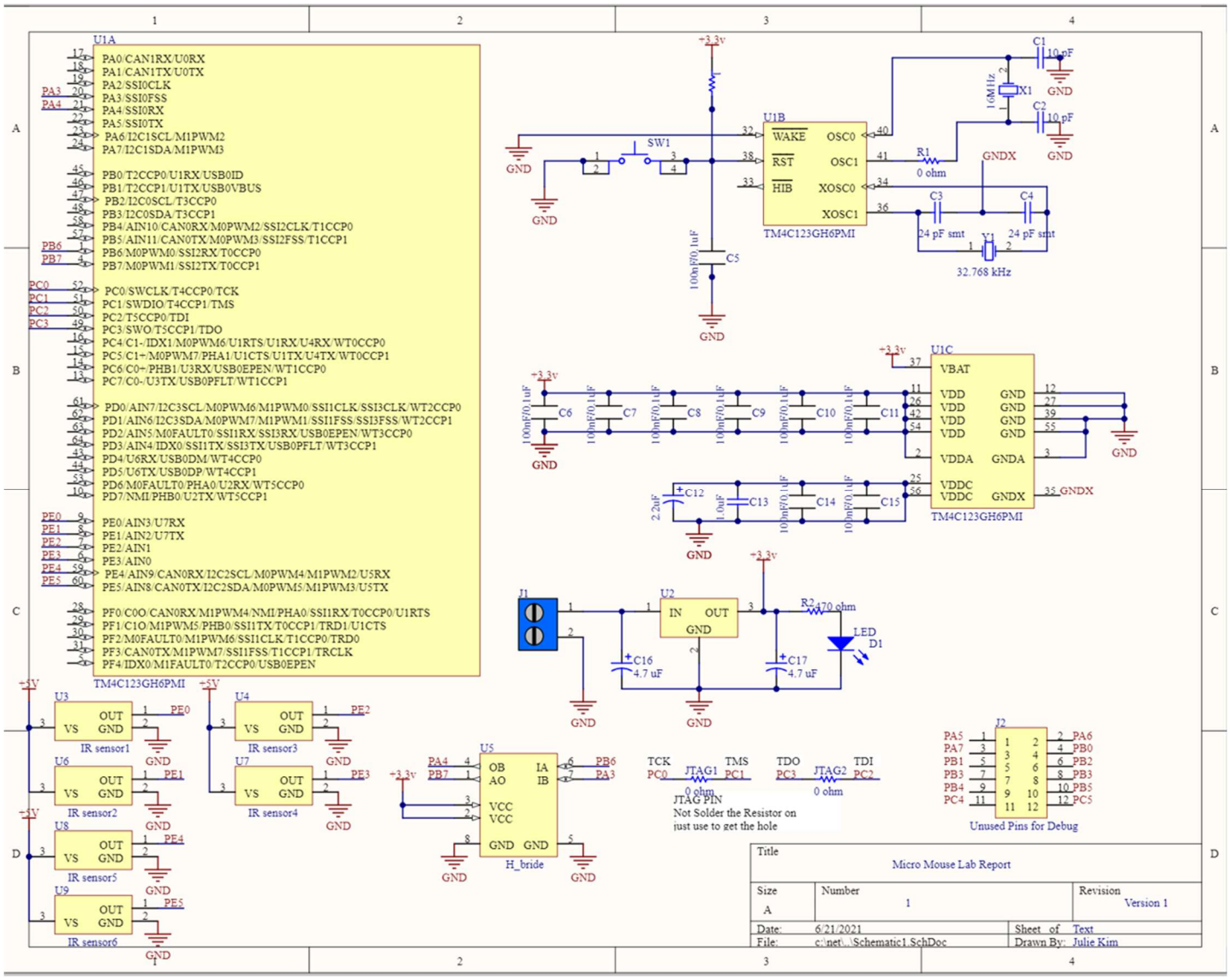
U1A
TM4C123GH6PMI
U1B
TM4C123GH6PMI
U1C
TM4C123GH6PMI
SW1
X1
16MHz
Y1
32.768 kHz
R1
0 ohm
R2
470 ohm
LED
D1
J1
J2
Unused Pins for Debug
JTAG PIN
Not Solder the Resistor on
just use to get the hole
IR sensor1
IR sensor2
IR sensor3
IR sensor4
IR sensor5
IR sensor6
H_bride
Title
Micro Mouse Lab Report
Size
A
Number
1
Revision
Version 1
Date: 6/21/2021
Sheet of Text
File: c:\net\...\Schematic1.SchDoc
Drawn By: Julie Kim

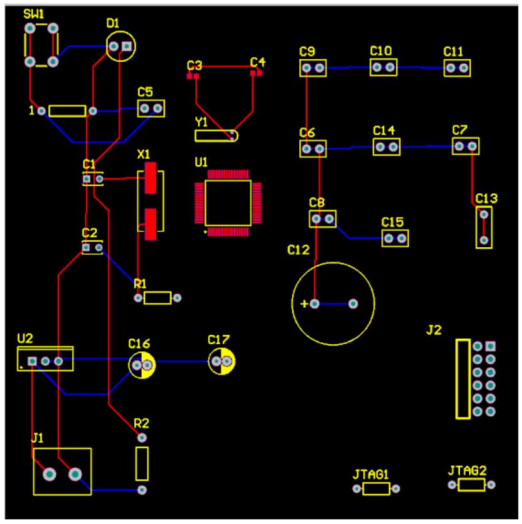
SW1
D1
C3
C4
C9
C10
C11
C5
Y1
C6
C14
C7
C1
X1
U1
C8
C15
C13
C2
C12
R1
U2
C16
C17
J2
R2
J1
JTAG1
JTAG2