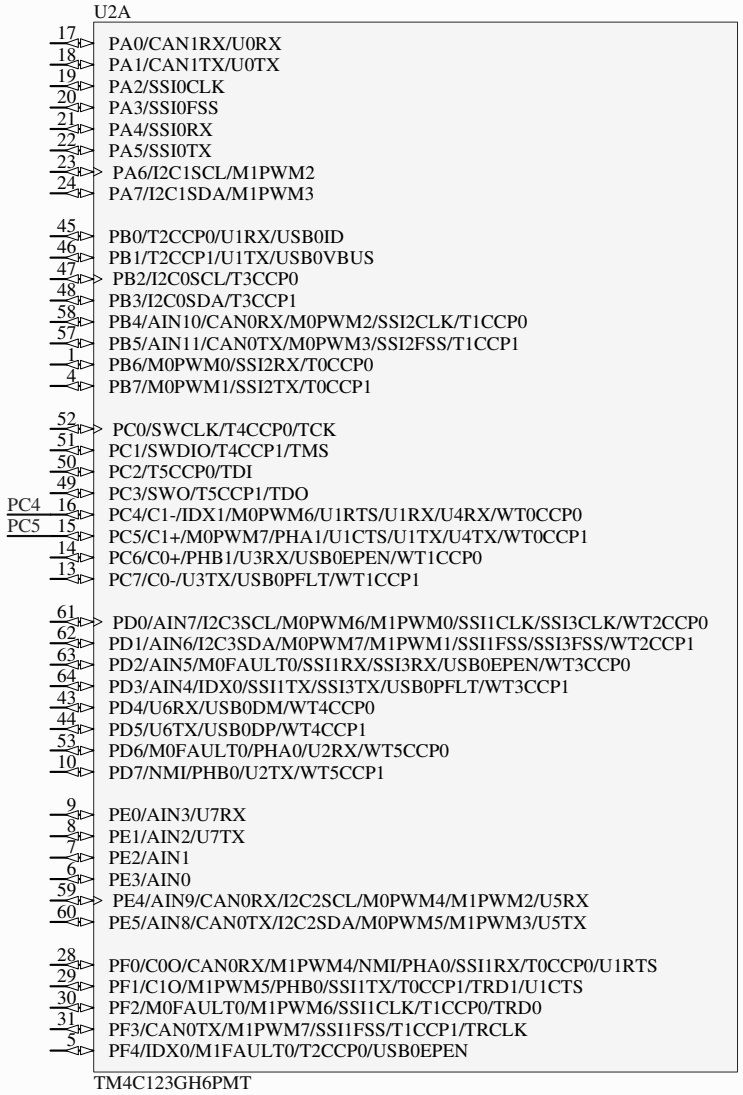

MCU_1

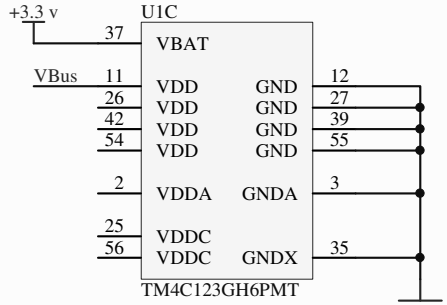

MCU_1

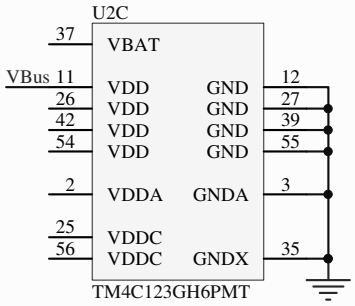

MCU_2

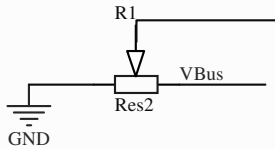

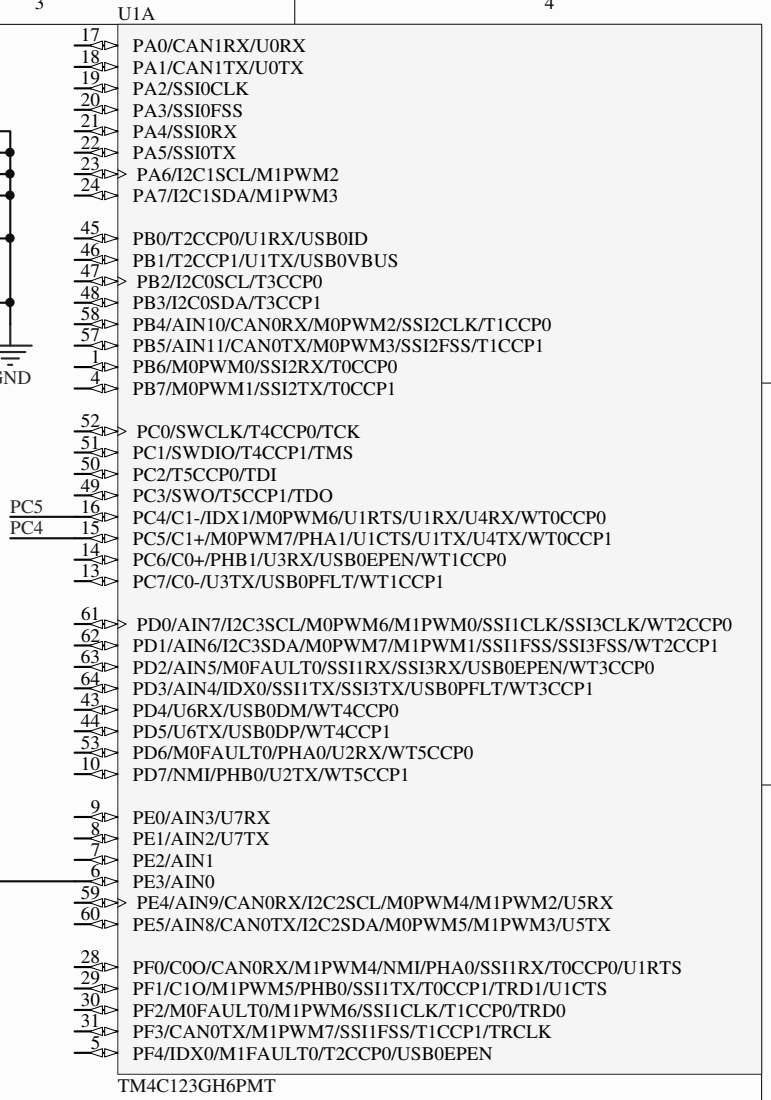

MCU_2

Title	*Julie Kim*		
Size A	Number **1**		Revision **4/8/2018**
Date: 4/8/2018		Sheet of	
File: Sheet1.SchDoc		Drawn By:	