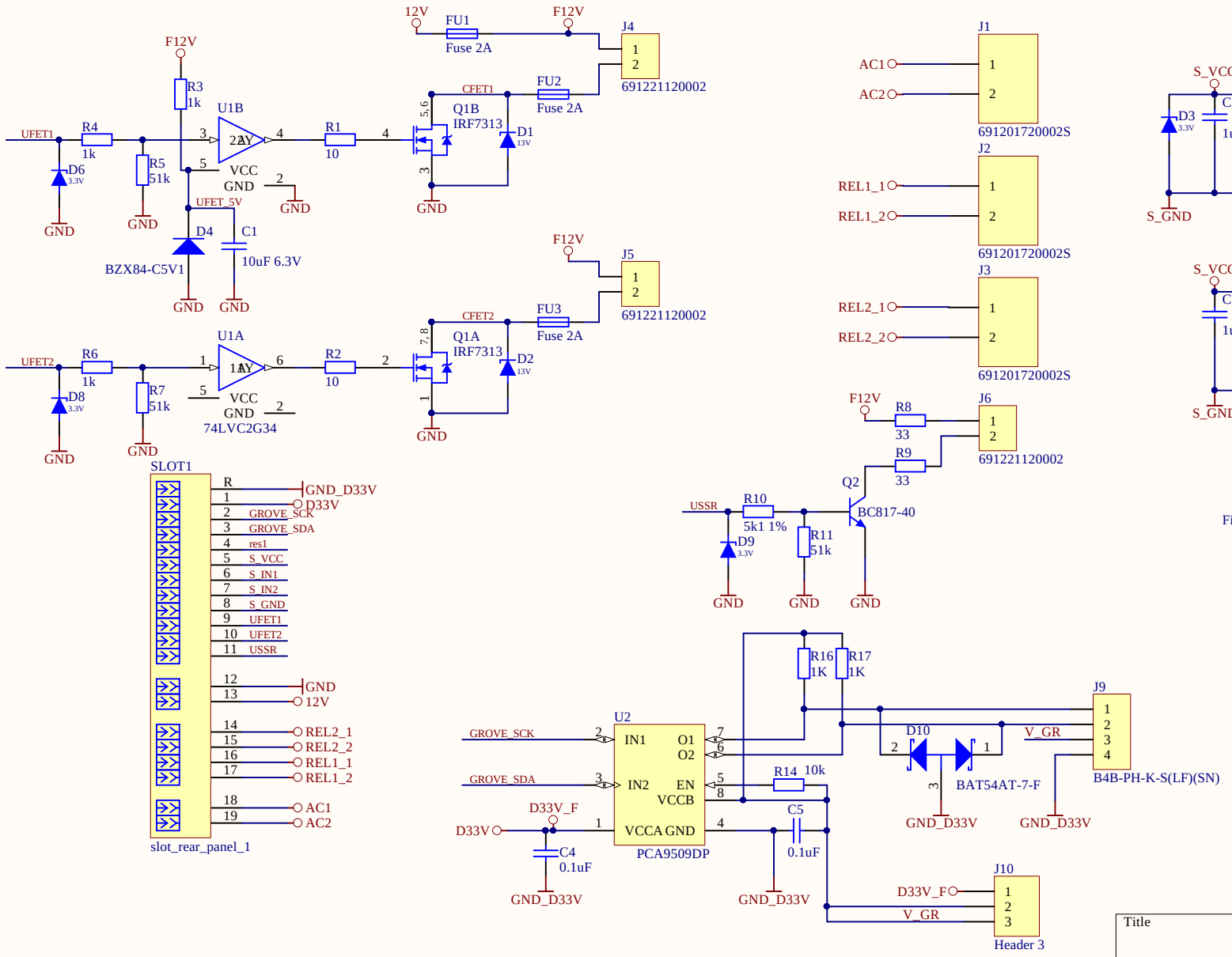

Title		
Size A4	Number	Revision
Date: 28.09.2016	Sheet of	
File: D:\cvadrat's box\..\AB1000_RB_V6_fin.SchDoc	Drawn By:	