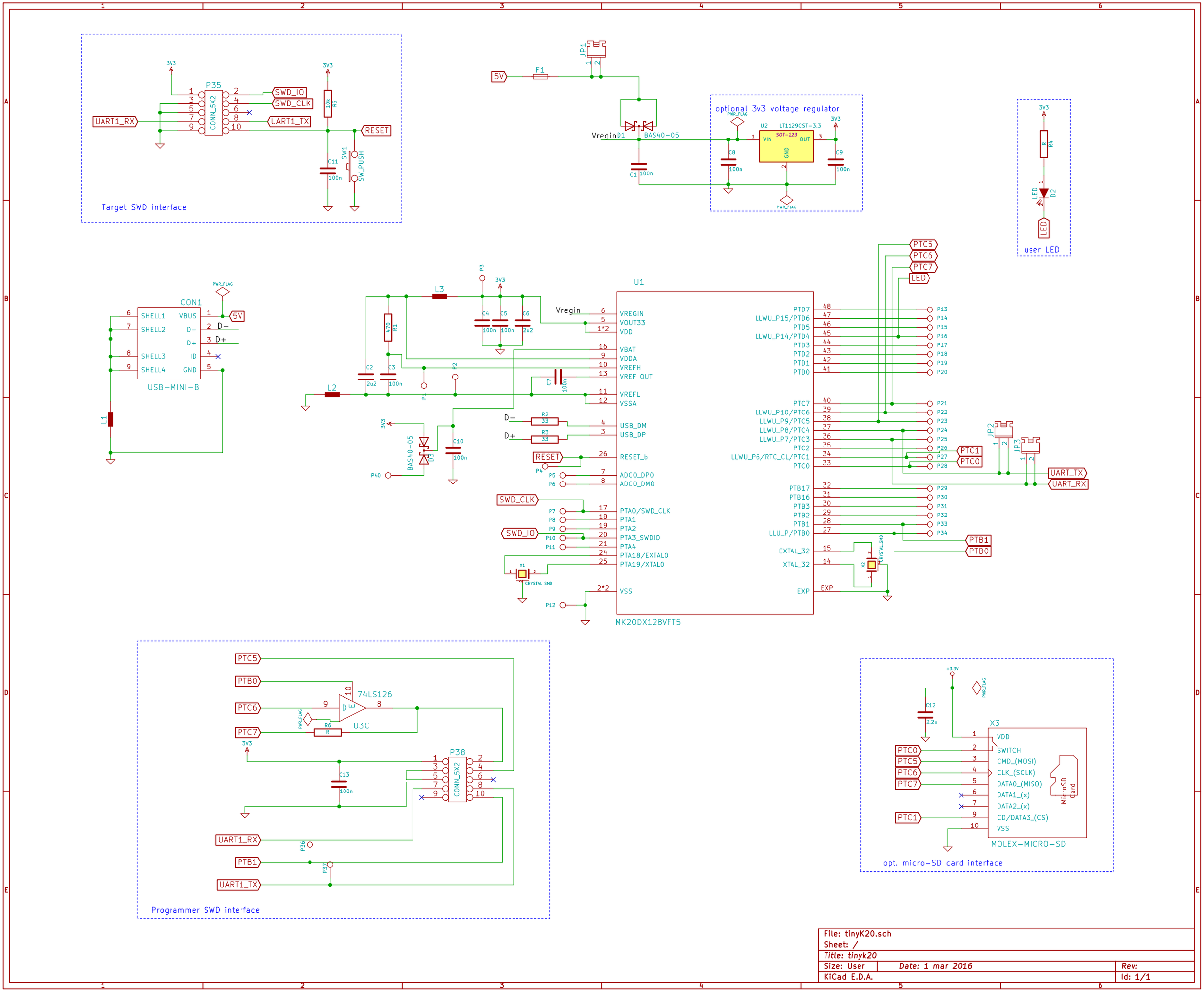

File: tinyK20.sch		
Sheet: /		
Title: tinyk20		
Size: User	Date: 1 mar 2016	Rev:
KiCad E.D.A.		Id: 1/1