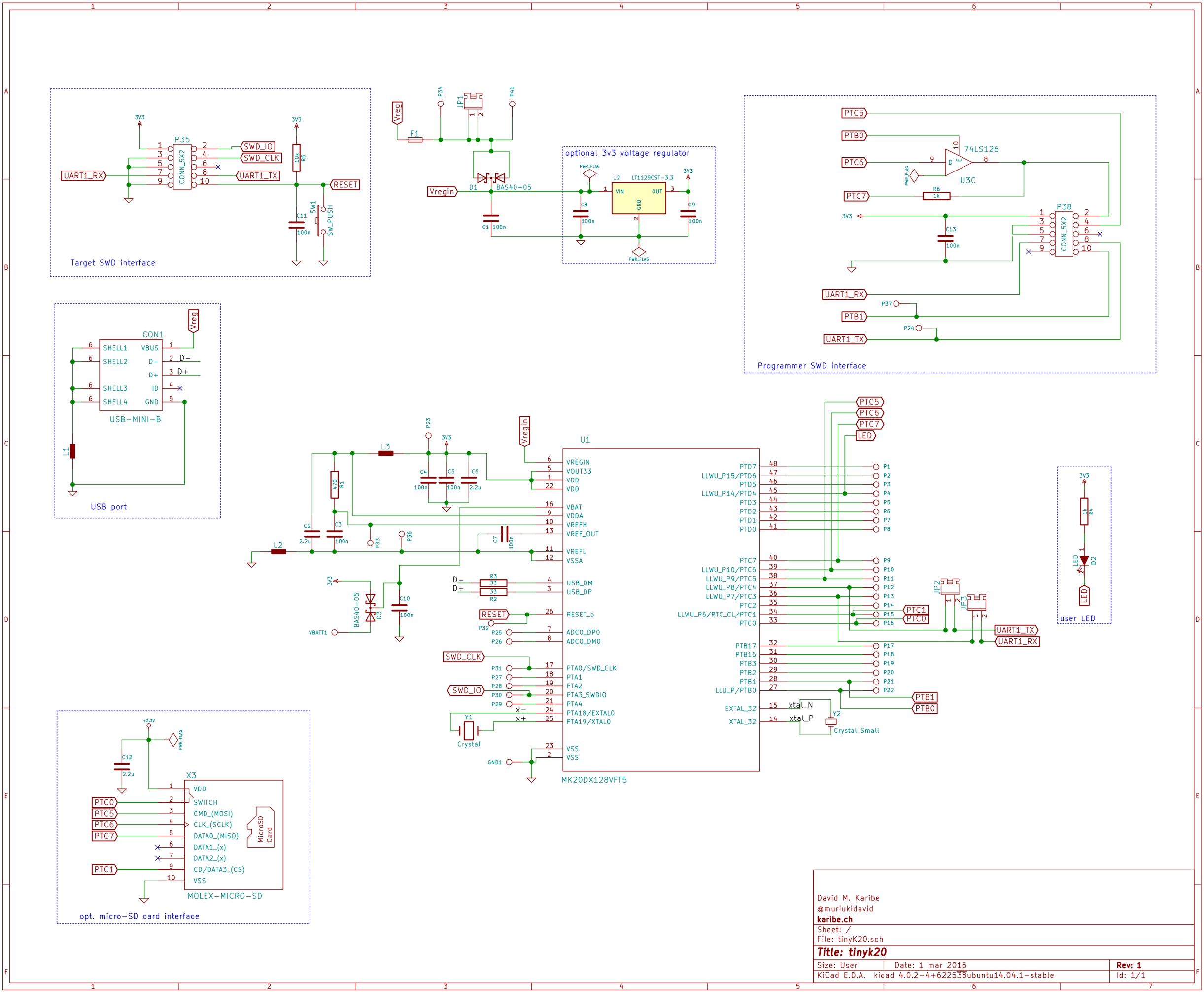
Target SWD interface
P35
CONN_5X2
3V3
UART1_RX
SWD_IO
SWD_CLK
UART1_TX
RESET
R5
10k
C11
100n
SW1
SW_PUSH
Vreg
F1
P34
JP1
P41
Vregin
D1
BAS40-05
C1
100n
optional 3v3 voltage regulator
PWR_FLAG
U2
LT1129CST-3.3
VIN
OUT
GND
C8
100n
C9
100n
Programmer SWD interface
PTC5
PTB0
PTC6
PTC7
74LS126
U3C
R6
1k
C13
100n
P38
CONN_5X2
UART1_RX
PTB1
UART1_TX
P37
P24
USB port
CON1
SHELL1
SHELL2
SHELL3
SHELL4
VBUS
D-
D+
ID
GND
USB-MINI-B
L1
L3
L2
470
R1
C2
2.2u
C3
100n
C4
100n
C5
100n
C6
2.2u
C7
100n
P23
P33
P36
U1
VREGIN
VOUT33
VDD
VBAT
VDDA
VREFH
VREF_OUT
VREFL
VSSA
USB_DM
USB_DP
RESET_b
ADC0_DP0
ADC0_DM0
PTA0/SWD_CLK
PTA1
PTA2
PTA3_SWDIO
PTA4
PTA18/EXTAL0
PTA19/XTAL0
VSS
MK20DX128VFT5
R3
33
R2
33
BAS40-05
D3
C10
100n
VBATT1
Y1
Crystal
Y2
Crystal_Small
xtal_N
xtal_P
EXTAL_32
XTAL_32
LED
user LED
R4
1k
D2
JP2
JP3
PTC1
PTC0
PTB1
PTB0
LED
opt. micro-SD card interface
X3
VDD
SWITCH
CMD_(MOSI)
CLK_(SCLK)
DATA0_(MISO)
DATA1_(x)
DATA2_(x)
CD/DATA3_(CS)
VSS
MOLEX-MICRO-SD
MicroSD Card
C12
2.2u
+3.3V
PWR_FLAG
David M. Karibe
@muriukidavid
karibe.ch
Sheet: /
File: tinyK20.sch
Title: tinyk20
Size: User
Date: 1 mar 2016
Rev: 1
KiCad E.D.A. kicad 4.0.2-4+622538ubuntu14.04.1-stable
Id: 1/1