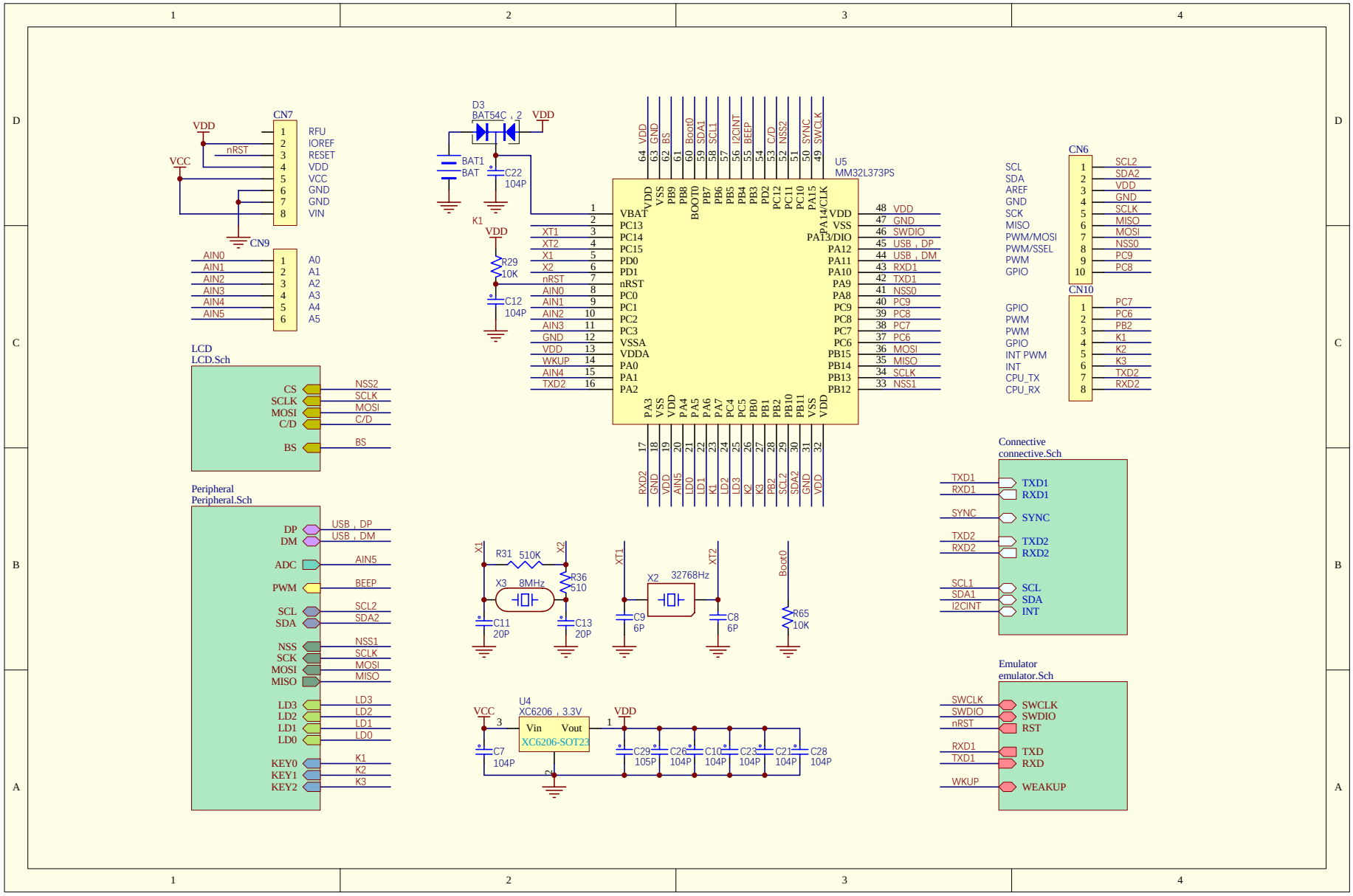
CN7
RFU
IOREF
RESET
VDD
VCC
GND
GND
VIN
nRST
CN9
AIN0
AIN1
AIN2
AIN3
AIN4
AIN5
A0
A1
A2
A3
A4
A5
D3
BAT54C，2
BAT1
BAT
C22
104P
K1
R29
10K
C12
104P
U5
MM32L373PS
VBAT
PC13
PC14
PC15
PD0
PD1
nRST
PC0
PC1
PC2
PC3
VSSA
VDDA
PA0
PA1
PA2
PA3
PA4
PA5
PA6
PA7
PC4
PC5
PB0
PB1
PB2
PB10
PB11
PB12
PB13
PB14
PB15
PC6
PC7
PC8
PC9
PA8
PA9
PA10
PA11
PA12
PA13/DIO
PA14/CLK
PA15
PC10
PC11
PC12
PD2
PB3
PB4
PB5
PB6
PB7
BOOT0
PB8
PB9
VSS
VDD
LCD
LCD.Sch
CS
SCLK
MOSI
C/D
BS
NSS2
SCLK
MOSI
C/D
BS
Peripheral
Peripheral.Sch
DP
DM
ADC
PWM
SCL
SDA
NSS
SCK
MOSI
MISO
LD3
LD2
LD1
LD0
KEY0
KEY1
KEY2
USB，DP
USB，DM
AIN5
BEEP
SCL2
SDA2
NSS1
SCLK
MOSI
MISO
LD3
LD2
LD1
LD0
K1
K2
K3
X1
R31
510K
X2
R36
510
X3
8MHz
C11
20P
C13
20P
XT1
X2
32768Hz
XT2
C9
6P
C8
6P
Boot0
R65
10K
U4
XC6206，3.3V
Vin
Vout
XC6206-SOT23
VCC
VDD
C7
104P
C29
105P
C26
104P
C10
104P
C23
104P
C21
104P
C28
104P
CN6
SCL
SDA
AREF
GND
SCK
MISO
PWM/MOSI
PWM/SSEL
PWM
GPIO
SCL2
SDA2
VDD
GND
SCLK
MISO
MOSI
NSS0
PC9
PC8
CN10
GPIO
PWM
PWM
GPIO
INT PWM
INT
CPU_TX
CPU_RX
PC7
PC6
PB2
K1
K2
K3
TXD2
RXD2
Connective
connective.Sch
TXD1
RXD1
SYNC
TXD2
RXD2
SCL1
SDA1
I2CINT
SCL
SDA
INT
Emulator
emulator.Sch
SWCLK
SWDIO
nRST
RXD1
TXD1
WKUP
SWCLK
SWDIO
RST
TXD
RXD
WEAKUP

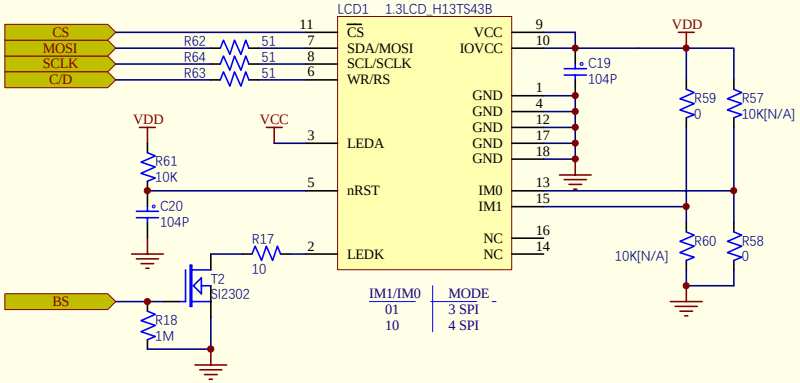
LCD1 1.3LCD_H13TS43B
CS
MOSI
SCLK
C/D
R62 51
R64 51
R63 51
CS
SDA/MOSI
SCL/SCLK
WR/RS
LEDA
nRST
LEDK
VCC
IOVCC
GND
IM0
IM1
NC
VDD
VCC
R61 10K
C20 104P
R17 10
T2 SI2302
BS
R18 1M
C19 104P
R59 0
R57 10K[N/A]
R60 10K[N/A]
R58 0
IM1/IM0 MODE
01 3 SPI
10 4 SPI

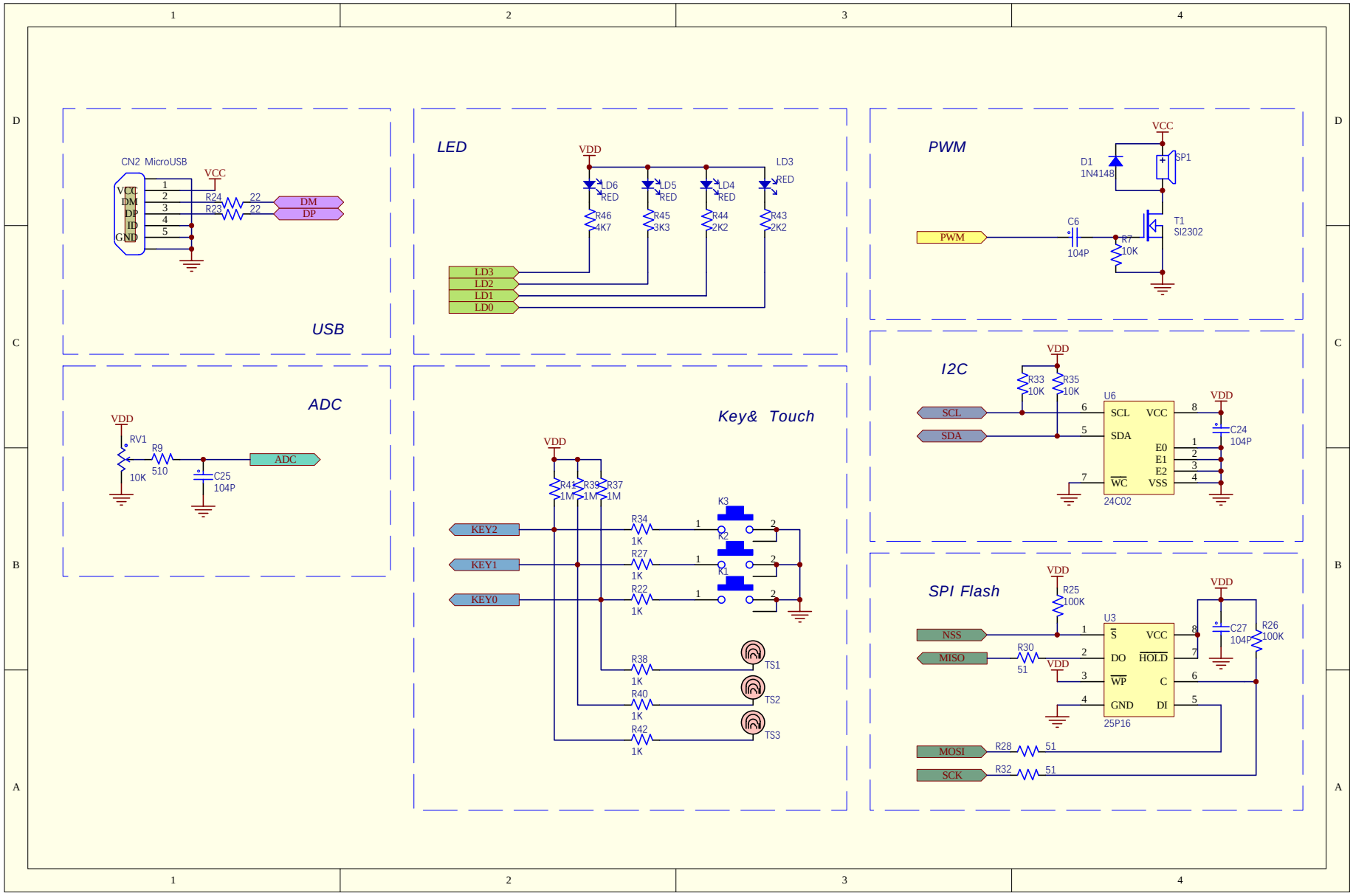
USB
CN2 MicroUSB
VCC
DM
DP
ID
GND
R24 22
R23 22
LED
VDD
LD6 RED
LD5 RED
LD4 RED
LD3 RED
R46 4K7
R45 3K3
R44 2K2
R43 2K2
LD3
LD2
LD1
LD0
PWM
VCC
D1 1N4148
SP1
T1 SI2302
C6 104P
R7 10K
PWM
ADC
VDD
RV1 10K
R9 510
C25 104P
ADC
Key& Touch
VDD
R41 1M
R39 1M
R37 1M
KEY2
KEY1
KEY0
R34 1K
R27 1K
R22 1K
K3
K2
K1
R38 1K
R40 1K
R42 1K
TS1
TS2
TS3
I2C
VDD
R33 10K
R35 10K
SCL
SDA
U6
SCL VCC
SDA
E0
E1
E2
WC VSS
24C02
C24 104P
SPI Flash
VDD
R25 100K
NSS
MISO
R30 51
U3
S VCC
DO HOLD
WP C
GND DI
25P16
C27 104P
R26 100K
MOSI
SCK
R28 51
R32 51

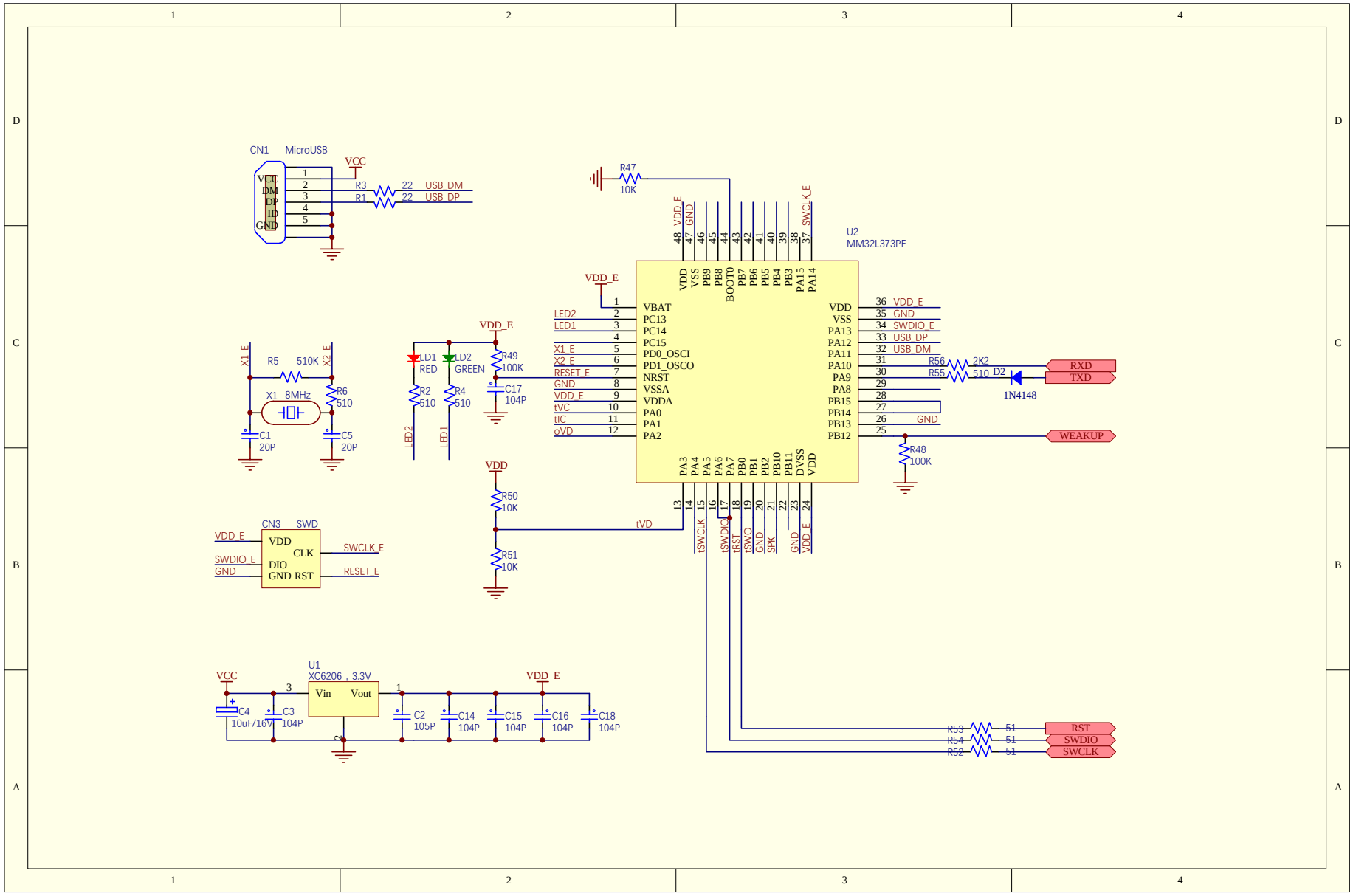
CN1 MicroUSB
VCC
VCC
DM
DP
ID
GND
R3 22 USB_DM
R1 22 USB_DP
R47
10K
U2
MM32L373PF
VDD_E
VDD VSS PB9 PB8 BOOT0 PB7 PB6 PB5 PB4 PB3 PA15 PA14
VBAT
PC13
PC14
PC15
PD0_OSCI
PD1_OSCO
NRST
VSSA
VDDA
PA0
PA1
PA2
VDD
VSS
PA13
PA12
PA11
PA10
PA9
PA8
PB15
PB14
PB13
PB12
LED2
LED1
X1_E
X2_E
RESET_E
GND
VDD_E
tVC
tIC
oVD
VDD_E
GND
SWDIO_E
USB_DP
USB_DM
GND
PA3 PA4 PA5 PA6 PA7 PB0 PB1 PB2 PB10 PB11 DVSS VDD
tSWCLK tSWDIO tRST tSWO GND SPK GND VDD_E
X1_E
R5 510K
X2_E
X1 8MHz
R6 510
C1 20P
C5 20P
LD1 RED
LD2 GREEN
R2 510
R4 510
LED2
LED1
VDD_E
R49 100K
C17 104P
VDD
R50 10K
R51 10K
tVD
R56 2K2
R55 510
D2
1N4148
RXD
TXD
GND
WEAKUP
R48 100K
CN3 SWD
VDD_E
SWDIO_E
GND
VDD
CLK
DIO
GND RST
SWCLK_E
RESET_E
U1
XC6206 , 3.3V
VCC
Vin
Vout
C4 10uF/16V
C3 104P
C2 105P
C14 104P
C15 104P
C16 104P
C18 104P
VDD_E
R53 51
R54 51
R52 51
RST
SWDIO
SWCLK

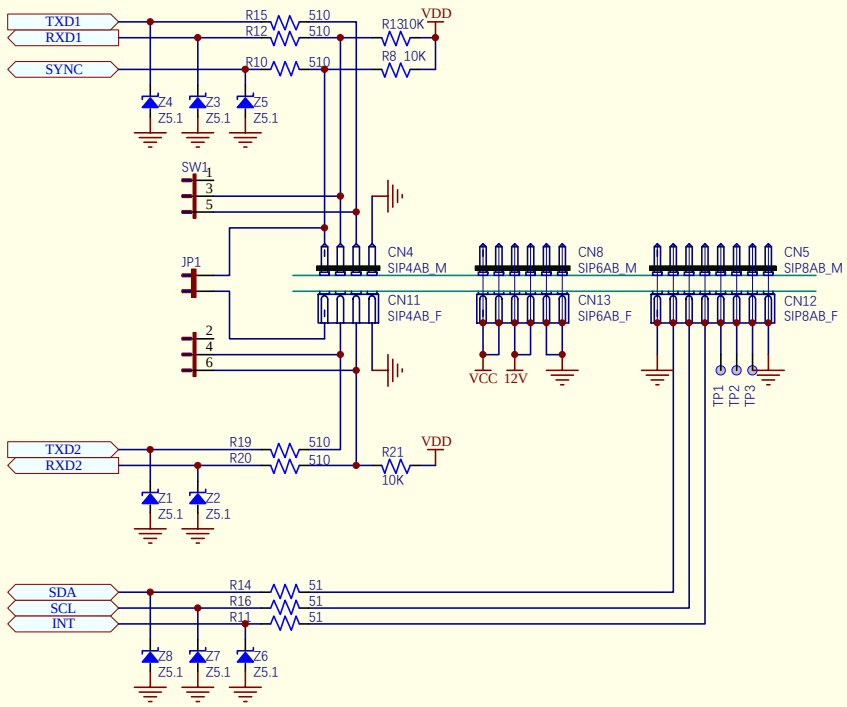
TXD1
RXD1
SYNC
R15 510
R12 510
R10 510
R13 10K
R8 10K
VDD
Z4 Z5.1
Z3 Z5.1
Z5 Z5.1
SW1
1
3
5
JP1
2
4
6
CN4 SIP4AB_M
CN11 SIP4AB_F
CN8 SIP6AB_M
CN13 SIP6AB_F
CN5 SIP8AB_M
CN12 SIP8AB_F
VCC
12V
TP1
TP2
TP3
TXD2
RXD2
R19 510
R20 510
R21 10K
VDD
Z1 Z5.1
Z2 Z5.1
SDA
SCL
INT
R14 51
R16 51
R11 51
Z8 Z5.1
Z7 Z5.1
Z6 Z5.1