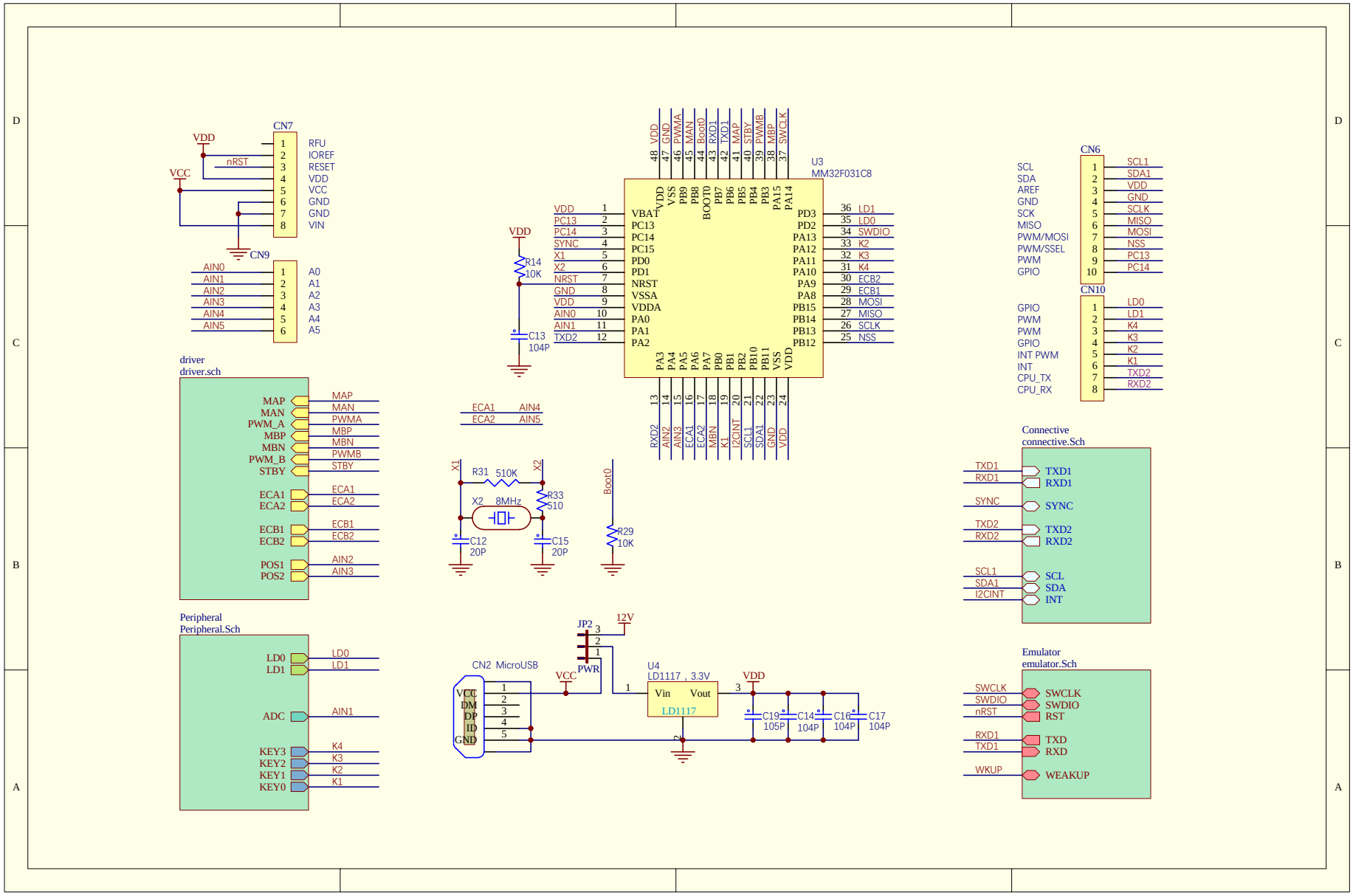
CN7
RFU
IOREF
RESET
VDD
VCC
GND
GND
VIN
nRST
CN9
A0
A1
A2
A3
A4
A5
AIN0
AIN1
AIN2
AIN3
AIN4
AIN5
U3
MM32F031C8
VBAT
PC13
PC14
PC15
PD0
PD1
NRST
VSSA
VDDA
PA0
PA1
PA2
PD3
PD2
PA13
PA12
PA11
PA10
PA9
PA8
PB15
PB14
PB13
PB12
LD1
LD0
SWDIO
K2
K3
K4
ECB2
ECB1
MOSI
MISO
SCLK
NSS
R14
10K
C13
104P
ECA1
ECA2
AIN4
AIN5
X1
X2
R31
510K
8MHz
R33
510
C12
20P
C15
20P
Boot0
R29
10K
CN6
SCL
SDA
AREF
GND
SCK
MISO
PWM/MOSI
PWM/SSEL
PWM
GPIO
SCL1
SDA1
VDD
GND
SCLK
MISO
MOSI
NSS
PC13
PC14
CN10
GPIO
PWM
PWM
GPIO
INT PWM
INT
CPU_TX
CPU_RX
LD0
LD1
K4
K3
K2
K1
TXD2
RXD2
driver
driver.sch
MAP
MAN
PWM_A
MBP
MBN
PWM_B
STBY
ECA1
ECA2
ECB1
ECB2
POS1
POS2
PWMA
PWMB
AIN2
AIN3
Connective
connective.Sch
TXD1
RXD1
SYNC
TXD2
RXD2
SCL1
SDA1
I2CINT
SCL
SDA
INT
Peripheral
Peripheral.Sch
LD0
LD1
ADC
AIN1
KEY3
KEY2
KEY1
KEY0
K4
K3
K2
K1
JP2
PWR
12V
CN2 MicroUSB
VCC
DM
DP
ID
GND
U4
LD1117 , 3.3V
Vin
Vout
LD1117
VDD
C19
105P
C14
104P
C16
104P
C17
104P
Emulator
emulator.Sch
SWCLK
SWDIO
nRST
RST
RXD1
TXD1
TXD
RXD
WKUP
WEAKUP

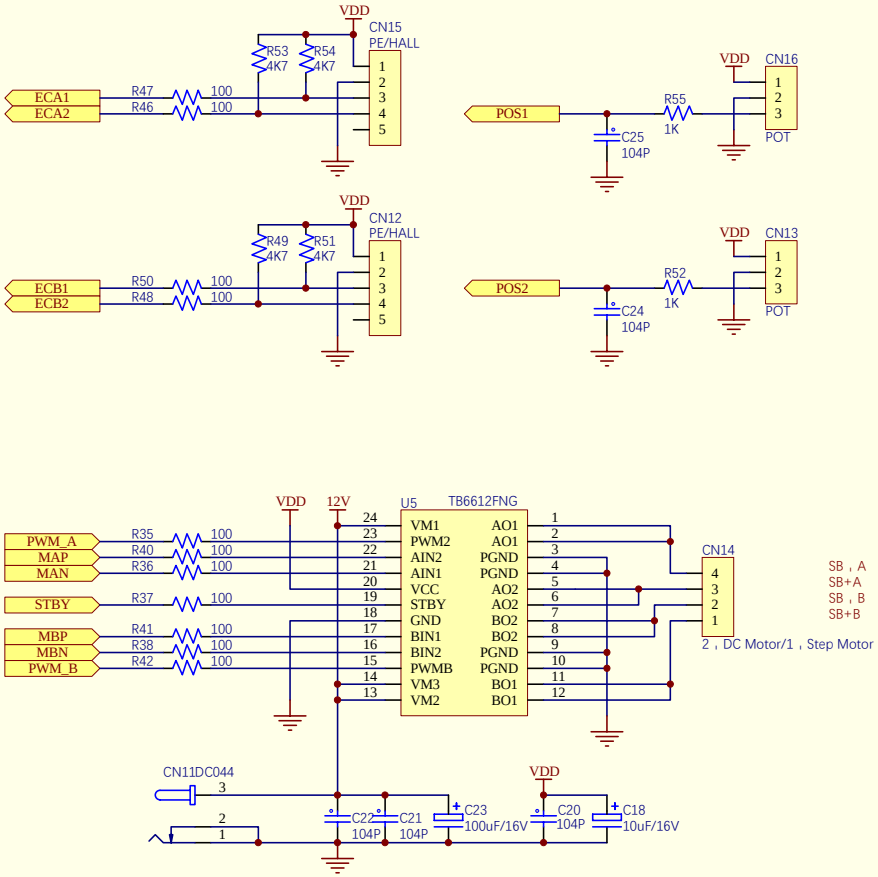
VDD
CN15
PE/HALL
R53
4K7
R54
4K7
ECA1
ECA2
R47
R46
100
100
VDD
CN16
POS1
R55
1K
C25
104P
POT
VDD
CN12
PE/HALL
R49
4K7
R51
4K7
ECB1
ECB2
R50
R48
100
100
VDD
CN13
POS2
R52
1K
C24
104P
POT
VDD
12V
U5
TB6612FNG
PWM_A
MAP
MAN
STBY
MBP
MBN
PWM_B
R35
R40
R36
R37
R41
R38
R42
VM1
PWM2
AIN2
AIN1
VCC
STBY
GND
BIN1
BIN2
PWMB
VM3
VM2
AO1
AO1
PGND
PGND
AO2
AO2
BO2
BO2
PGND
PGND
BO1
BO1
CN14
SB，A
SB+A
SB，B
SB+B
2，DC Motor/1，Step Motor
CN11DC044
VDD
C22
104P
C21
104P
C23
100uF/16V
C20
104P
C18
10uF/16V

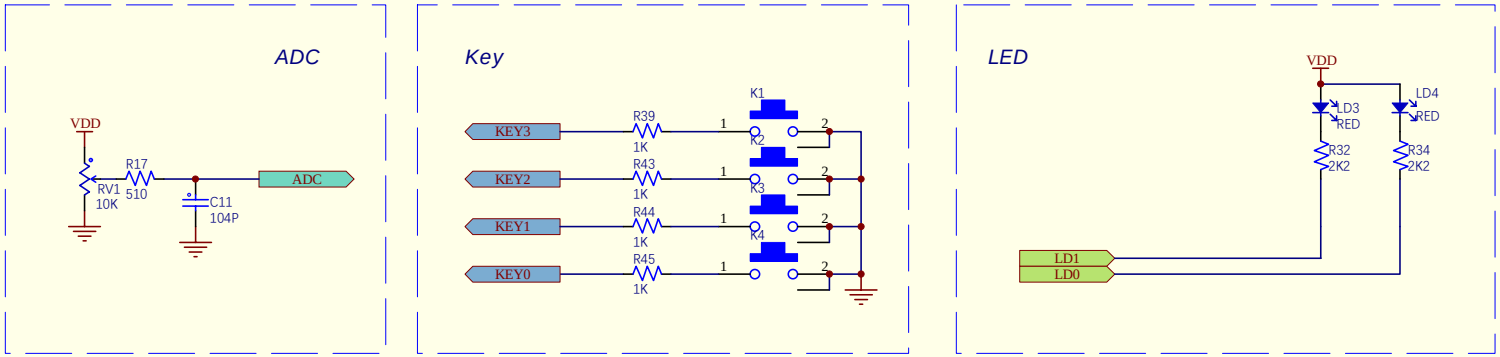
ADC
VDD
R17
510
RV1
10K
C11
104P
ADC
Key
KEY3
KEY2
KEY1
KEY0
R39
1K
R43
1K
R44
1K
R45
1K
K1
K2
K3
K4
1
2
LED
VDD
LD3
RED
LD4
RED
R32
2K2
R34
2K2
LD1
LD0

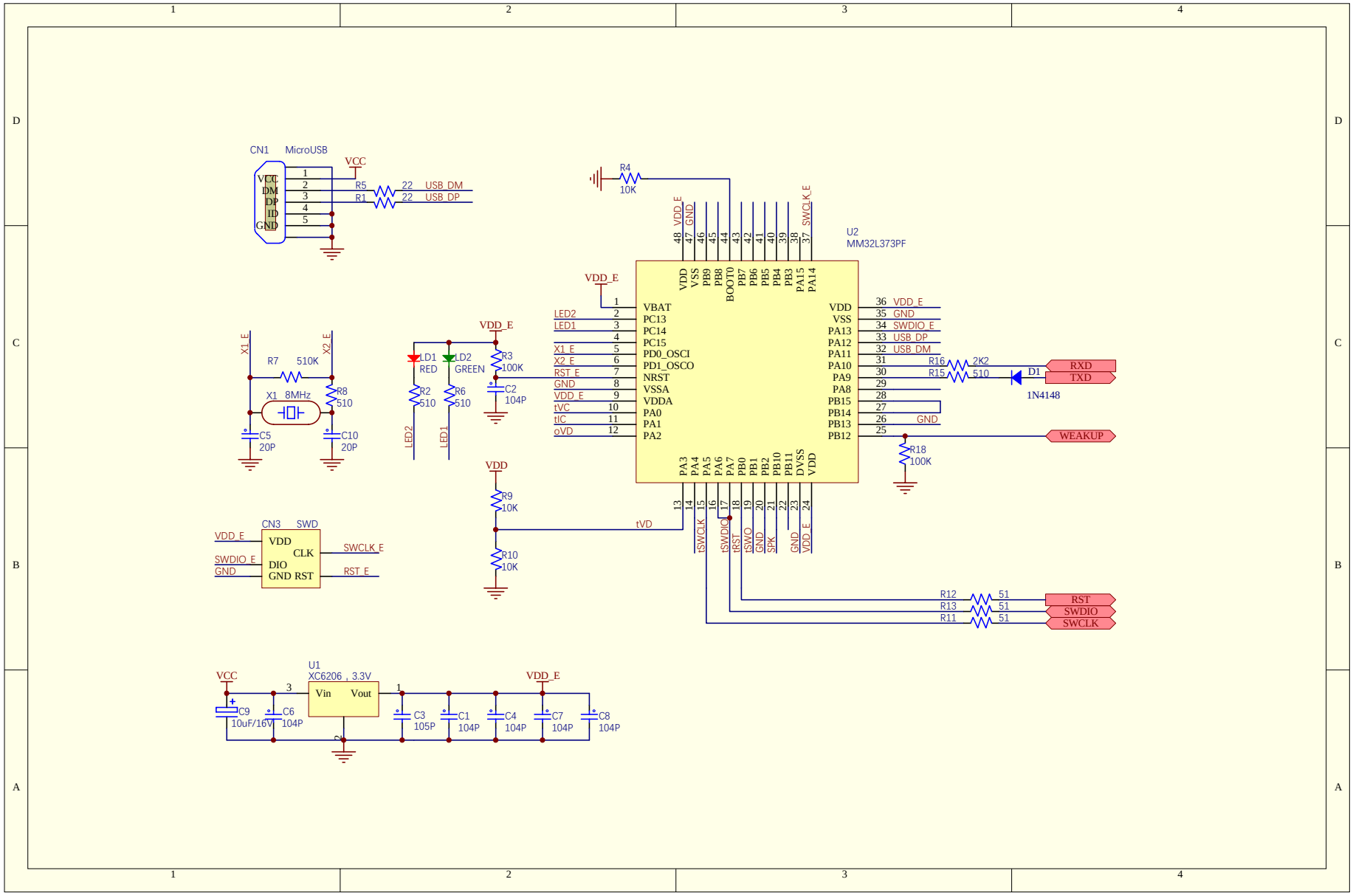
CN1 MicroUSB
VCC
VCC
DM
DP
ID
GND
R5 22 USB_DM
R1 22 USB_DP
R4 10K
U2
MM32L373PF
VDD_E
GND
SWCLK_E
VBAT
PC13
PC14
PC15
PD0_OSCI
PD1_OSCO
NRST
VSSA
VDDA
PA0
PA1
PA2
VDD
VSS
PA13
PA12
PA11
PA10
PA9
PA8
PB15
PB14
PB13
PB12
SWDIO_E
USB_DP
USB_DM
LED2
LED1
X1_E
X2_E
RST_E
tVC
tIC
oVD
R16 2K2
R15 510
D1
1N4148
RXD
TXD
WEAKUP
R18 100K
X1 8MHz
R7 510K
R8 510
C5 20P
C10 20P
LD1 RED
LD2 GREEN
R2 510
R6 510
R3 100K
C2 104P
R9 10K
R10 10K
tVD
CN3 SWD
VDD
CLK
DIO
GND RST
SWCLK_E
RST_E
R12 51
R13 51
R11 51
RST
SWDIO
SWCLK
U1
XC6206 , 3.3V
Vin
Vout
C9 10uF/16V
C6 104P
C3 105P
C1 104P
C4 104P
C7 104P
C8 104P

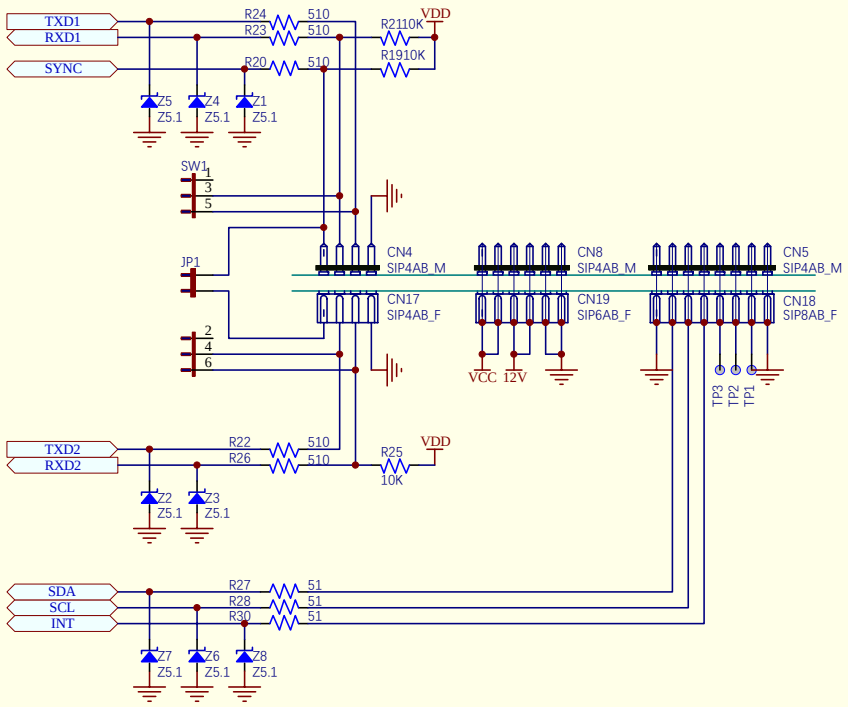
TXD1
RXD1
SYNC
R24 510
R23 510
R20 510
R2110K
R1910K
VDD
Z5 Z5.1
Z4 Z5.1
Z1 Z5.1
SW1
1
3
5
JP1
2
4
6
CN4 SIP4AB_M
CN17 SIP4AB_F
CN8 SIP4AB_M
CN19 SIP6AB_F
CN5 SIP4AB_M
CN18 SIP8AB_F
VCC
12V
TP3
TP2
TP1
TXD2
RXD2
R22 510
R26 510
R25 10K
VDD
Z2 Z5.1
Z3 Z5.1
SDA
SCL
INT
R27 51
R28 51
R30 51
Z7 Z5.1
Z6 Z5.1
Z8 Z5.1