Advanced Computer Architecture

Dynamic Scheduling

曹强
计算机学院存储所
武汉光电国家研究中心

Recap: In-Order Commit for Precise Traps

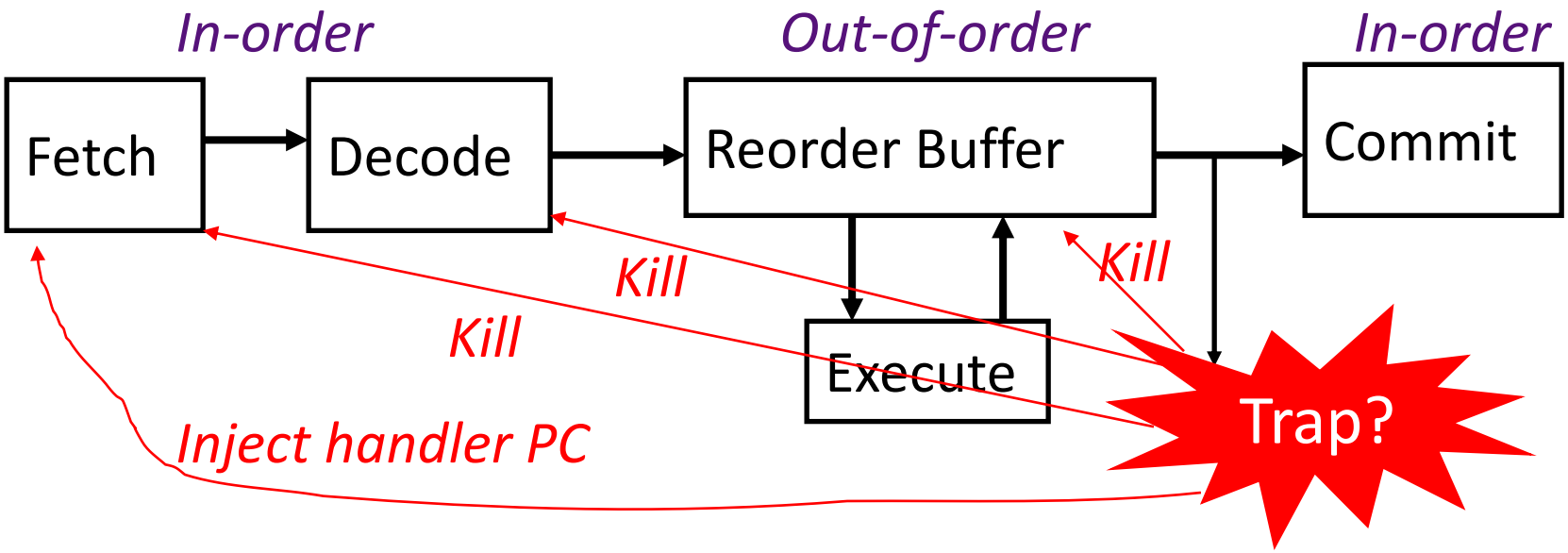

- In-order instruction fetch and decode, and dispatch to reservation stations inside reorder buffer
- Instructions issue from reservation stations out-of-order
- Out-of-order completion, values stored in temporary buffers
- Commit is in-order, checks for traps, and if none updates architectural state

Phases of Instruction Execution

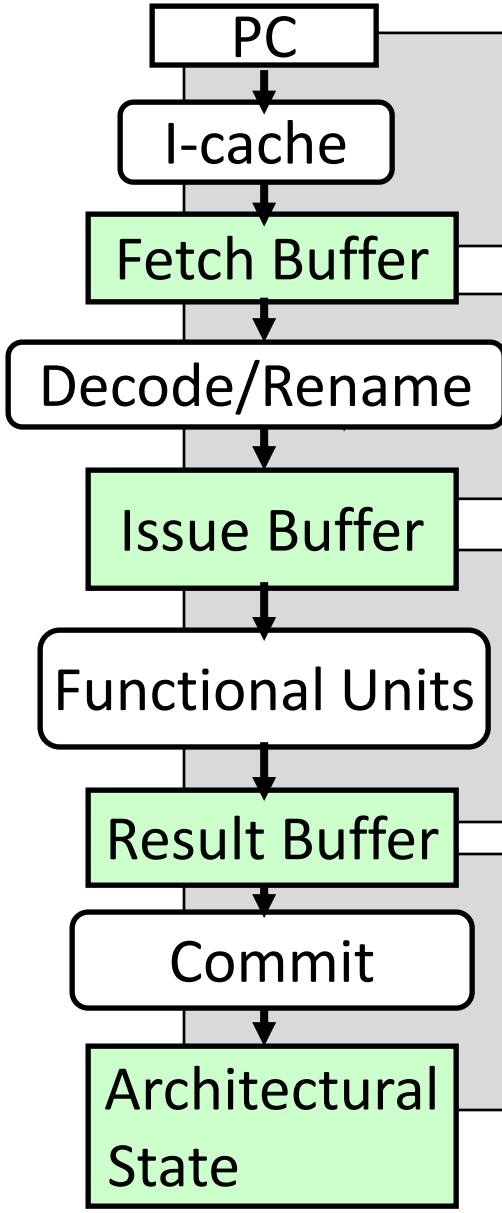

***Fetch**: Instruction bits retrieved from instruction cache.*

***Decode**: Instructions dispatched to appropriate issue buffer.*

***Execute**: Instructions and operands issued to functional units. When execution completes, all results and exception flags are available.*

***Commit**: Instruction irrevocably updates architectural state (aka "graduation" or "retirement"), or takes precise trap.*

Scoreboard: a bookkeeping technique

- **Out-of-order execution divides ID stage:**
  1. **Issue—decode instructions, check for structural hazards**
  2. **Read operands—wait until no data hazards, then read operands**
- **Scoreboards date to CDC6600 in 1963**
  - **Readings for Monday include one on CDC6600**
- **Instructions execute whenever not dependent on previous instructions and no hazards.**
- **CDC 6600: In order issue, out-of-order execution, out-of-order commit (or completion)**
  - **No forwarding!**
  - **Imprecise interrupt/exception model for now**

Scoreboard Architecture (CDC 6600)

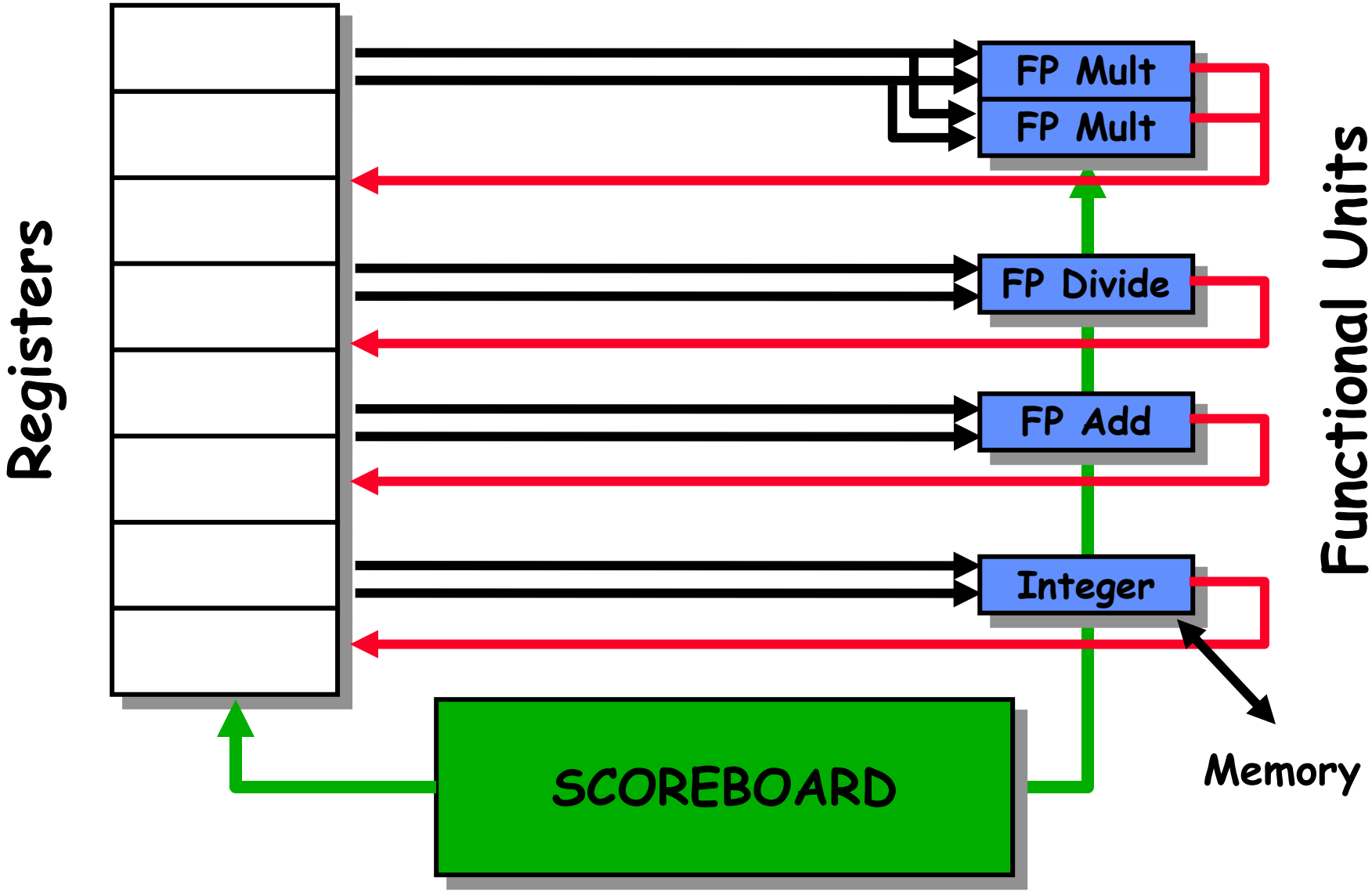

Scoreboard Implications

- Out-of-order completion => WAR, WAW hazards?
- Solutions for WAR:
  - Stall writeback until registers have been read
  - Read registers only during Read Operands stage
- Solution for WAW:
  - Detect hazard and stall issue of new instruction until other instruction completes
- No register renaming
- Need to have multiple instructions in execution phase => multiple execution units or pipelined execution units
- Scoreboard keeps track of dependencies between instructions that have already issued
- Scoreboard replaces ID, EX, WB with 4 stages

Four Stages of Scoreboard Control

- **Issue—decode instructions & check for structural hazards (ID1)**
  - **Instructions issued in program order (for hazard checking)**
  - **Don't issue if structural hazard**
  - **Don't issue if instruction is output dependent on any previously issued but uncompleted instruction (no WAW hazards)**
- **Read operands—wait until no data hazards, then read operands (ID2)**
  - **All real dependencies (RAW hazards) resolved in this stage, since we wait for instructions to write back data.**
  - **No forwarding of data in this model!**

Four Stages of Scoreboard Control

- **Execution—operate on operands (EX)**
  - The functional unit begins execution upon receiving operands. When the result is ready, it notifies the scoreboard that it has completed execution.
- **Write result—finish execution (WB)**
  - Stall until no WAR hazards with previous instructions:

Example:

```
DIVD   F0,F2,F4
ADDD   F10,F0,F8
SUBD   F8,F8,F14
```

CDC 6600 scoreboard would stall SUBD until ADDD reads operands

Three Parts of the Scoreboard

- **Instruction status:**
  Which of 4 steps the instruction is in

- **Functional unit status:—Indicates the state of the functional unit (FU). 9 fields for each functional unit**
  - **Busy:** Indicates whether the unit is busy or not
  - **Op:** Operation to perform in the unit (e.g., + or –)
  - **Fi:** Destination register
  - **Fj,Fk:** Source-register numbers
  - **Qj,Qk:** Functional units producing source registers Fj, Fk
  - **Rj,Rk:** Flags indicating when Fj, Fk are ready

- **Register result status—Indicates which functional unit will write each register, if one exists. Blank when no pending instructions will write that register**

Scoreboard Example

Instruction status:

Instruction		*j*	*k*	*Issue*	*Read Oper*	*Exec Comp*	*Write Result*
LD	F6	34+	R2				
LD	F2	45+	R3				
MULTD	F0	F2	F4				
SUBD	F8	F6	F2				
DIVD	F10	F0	F6				
ADDD	F6	F8	F2				

Functional unit status:

Time	*Name*	*Busy*	*Op*	*dest Fi*	*S1 Fj*	*S2 Fk*	*FU Qj*	*FU Qk*	*Fj? Rj*	*Fk? Rk*
	Integer	No								
	Mult1	No								
	Mult2	No								
	Add	No								
	Divide	No								

Register result status:

Clock	*F0*	*F2*	*F4*	*F6*	*F8*	*F10*	*F12*	...	*F30*
FU									

Detailed Scoreboard Pipeline Control

Instruction status	Wait until	Bookkeeping
Issue	Not busy (FU) and not result(D)	Busy(FU)← yes; Op(FU)← op; Fi(FU)← `D'; Fj(FU)← `S1'; Fk(FU)← `S2'; Qj← Result('S1'); Qk← Result(`S2'); Rj← not Qj; Rk← not Qk; Result('D')← FU;
Read operands	Rj and Rk	Rj← No; Rk← No
Execution complete	Functional unit done	
Write result	∀f((Fj(f)≠Fi(FU) or Rj(f)=No) & (Fk(f)≠Fi(FU) or Rk(f)=No))	∀f(if Qj(f)=FU then Rj(f)← Yes); ∀f(if Qk(f)=FU then Rj(f)← Yes); Result(Fi(FU))← 0; Busy(FU)← No

Scoreboard Example: Cycle 1

Instruction status:

Instruction		*j*	*k*	*Issue*	*Read Oper*	*Exec Comp*	*Write Result*
LD	F6	34+	R2	1			
LD	F2	45+	R3				
MULTD	F0	F2	F4				
SUBD	F8	F6	F2				
DIVD	F10	F0	F6				
ADDD	F6	F8	F2				

Functional unit status:

Time	*Name*	*Busy*	*Op*	*dest Fi*	*S1 Fj*	*S2 Fk*	*FU Qj*	*FU Qk*	*Fj? Rj*	*Fk? Rk*
	Integer	Yes	Load	F6		R2				Yes
	Mult1	No								
	Mult2	No								
	Add	No								
	Divide	No								

Register result status:

Clock		*F0*	*F2*	*F4*	*F6*	*F8*	*F10*	*F12*	...	*F30*
1	*FU*				Integer					

Scoreboard Example: Cycle 2

Instruction status:

Instruction		*j*	*k*	*Issue*	*Read Oper*	*Exec Comp*	*Write Result*
LD	F6	34+	R2	1	2		
LD	F2	45+	R3				
MULTD	F0	F2	F4				
SUBD	F8	F6	F2				
DIVD	F10	F0	F6				
ADDD	F6	F8	F2				

Functional unit status:

Time	*Name*	*Busy*	*Op*	*dest Fi*	*S1 Fj*	*S2 Fk*	*FU Qj*	*FU Qk*	*Fj? Rj*	*Fk? Rk*
	Integer	Yes	Load	F6		R2				Yes
	Mult1	No								
	Mult2	No								
	Add	No								
	Divide	No								

Register result status:

Clock		*F0*	*F2*	*F4*	*F6*	*F8*	*F10*	*F12*	...	*F30*
2	*FU*				Integer					

- **Issue 2nd LD?**

Scoreboard Example: Cycle 3

Instruction status:

Instruction		*j*	*k*	*Issue*	*Read Oper*	*Exec Comp*	*Write Result*
LD	F6	34+	R2	1	2	3	
LD	F2	45+	R3				
MULTD	F0	F2	F4				
SUBD	F8	F6	F2				
DIVD	F10	F0	F6				
ADDD	F6	F8	F2				

Functional unit status:

Time	*Name*	*Busy*	*Op*	*dest Fi*	*S1 Fj*	*S2 Fk*	*FU Qj*	*FU Qk*	*Fj? Rj*	*Fk? Rk*
	Integer	Yes	Load	F6		R2				No
	Mult1	No								
	Mult2	No								
	Add	No								
	Divide	No								

Register result status:

Clock		*F0*	*F2*	*F4*	*F6*	*F8*	*F10*	*F12*	...	*F30*
3	*FU*				Integer					

- **Issue MULT?**

Scoreboard Example: Cycle 4

Instruction status:

Instruction		*j*	*k*	*Issue*	*Read Oper*	*Exec Comp*	*Write Result*
LD	F6	34+	R2	1	2	3	4
LD	F2	45+	R3				
MULTD	F0	F2	F4				
SUBD	F8	F6	F2				
DIVD	F10	F0	F6				
ADDD	F6	F8	F2				

Functional unit status:

Time	*Name*	*Busy*	*Op*	*dest Fi*	*S1 Fj*	*S2 Fk*	*FU Qj*	*FU Qk*	*Fj? Rj*	*Fk? Rk*
	Integer	No								
	Mult1	No								
	Mult2	No								
	Add	No								
	Divide	No								

Register result status:

Clock		*F0*	*F2*	*F4*	*F6*	*F8*	*F10*	*F12*	...	*F30*
4	*FU*				Integer					

Scoreboard Example: Cycle 5

Instruction status:

Instruction		*j*	*k*	*Issue*	*Read Oper*	*Exec Comp*	*Write Result*
LD	F6	34+	R2	1	2	3	4
LD	F2	45+	R3	5			
MULTD	F0	F2	F4				
SUBD	F8	F6	F2				
DIVD	F10	F0	F6				
ADDD	F6	F8	F2				

Functional unit status:

Time	*Name*	*Busy*	*Op*	*dest Fi*	*S1 Fj*	*S2 Fk*	*FU Qj*	*FU Qk*	*Fj? Rj*	*Fk? Rk*
	Integer	Yes	Load	F2		R3				Yes
	Mult1	No								
	Mult2	No								
	Add	No								
	Divide	No								

Register result status:

Clock		*F0*	*F2*	*F4*	*F6*	*F8*	*F10*	*F12*	...	*F30*
5	*FU*		Integer							

Scoreboard Example: Cycle 6

Instruction status:

Instruction		*j*	*k*	*Issue*	*Read Oper*	*Exec Comp*	*Write Result*
LD	F6	34+	R2	1	2	3	4
LD	F2	45+	R3	5	6		
MULTD	F0	F2	F4	6			
SUBD	F8	F6	F2				
DIVD	F10	F0	F6				
ADDD	F6	F8	F2				

Functional unit status:

Time	*Name*	*Busy*	*Op*	*dest Fi*	*S1 Fj*	*S2 Fk*	*FU Qj*	*FU Qk*	*Fj? Rj*	*Fk? Rk*
	Integer	~~Yes~~	~~Load~~	~~F2~~		~~R3~~				~~Yes~~
	Mult1	Yes	Mult	F0	F2	F4	Integer		No	Yes
	Mult2	~~No~~								
	Add	No								
	Divide	No								

Register result status:

Clock		*F0*	*F2*	*F4*	*F6*	*F8*	*F10*	*F12*	*...*	*F30*
6	*FU*	Mult1	Integer							

Scoreboard Example: Cycle 7

Instruction status:

Instruction		*j*	*k*	*Issue*	*Read Oper*	*Exec Comp*	*Write Result*
LD	F6	34+	R2	1	2	3	4
LD	F2	45+	R3	5	6	7	
MULTD	F0	F2	F4	6			
SUBD	F8	F6	F2	7			
DIVD	F10	F0	F6				
ADDD	F6	F8	F2				

Functional unit status:

Time	*Name*	*Busy*	*Op*	*dest Fi*	*S1 Fj*	*S2 Fk*	*FU Qj*	*FU Qk*	*Fj? Rj*	*Fk? Rk*
	Integer	Yes	Load	F2		R3				No
	Mult1	Yes	Mult	F0	F2	F4	Integer		No	Yes
	Mult2	No								
	Add	Yes	Sub	F8	F6	F2		Integer	Yes	No
	Divide	No								

Register result status:

Clock		*F0*	*F2*	*F4*	*F6*	*F8*	*F10*	*F12*	...	*F30*
7	*FU*	Mult1	Integer			Add				

- **Read multiply operands?**

Scoreboard Example: Cycle 8a
(First half of clock cycle)

Instruction status:

Instruction		*j*	*k*	*Issue*	*Read Oper*	*Exec Comp*	*Write Result*
LD	F6	34+	R2	1	2	3	4
LD	F2	45+	R3	5	6	7	
MULTD	F0	F2	F4	6			
SUBD	F8	F6	F2	7			
DIVD	F10	F0	F6	8			
ADDD	F6	F8	F2				

Functional unit status:

Time	*Name*	*Busy*	*Op*	*dest Fi*	*S1 Fj*	*S2 Fk*	*FU Qj*	*FU Qk*	*Fj? Rj*	*Fk? Rk*
	Integer	Yes	Load	F2		R3				No
	Mult1	Yes	Mult	F0	F2	F4	Integer		No	Yes
	Mult2	No								
	Add	Yes	Sub	F8	F6	F2		Integer	Yes	No
	Divide	Yes	Div	F10	F0	F6	Mult1		No	Yes

Register result status:

Clock		*F0*	*F2*	*F4*	*F6*	*F8*	*F10*	*F12*	...	*F30*
8	*FU*	Mult1	Integer			Add	Divide			

Scoreboard Example: Cycle 8b
(Second half of clock cycle)

Instruction status:

Instruction		*j*	*k*	*Issue*	*Read Oper*	*Exec Comp*	*Write Result*
LD	F6	34+	R2	1	2	3	4
LD	F2	45+	R3	5	6	7	8
MULTD	F0	F2	F4	6			
SUBD	F8	F6	F2	7			
DIVD	F10	F0	F6	8			
ADDD	F6	F8	F2				

Functional unit status:

Time	*Name*	*Busy*	*Op*	*dest Fi*	*S1 Fj*	*S2 Fk*	*FU Qj*	*FU Qk*	*Fj? Rj*	*Fk? Rk*
	Integer	No								
	Mult1	Yes	Mult	F0	F2	F4			Yes	Yes
	Mult2	No								
	Add	Yes	Sub	F8	F6	F2			Yes	Yes
	Divide	Yes	Div	F10	F0	F6	Mult1		No	Yes

Register result status:

Clock		*F0*	*F2*	*F4*	*F6*	*F8*	*F10*	*F12*	...	*F30*
8	*FU*	Mult1				Add	Divide			

Scoreboard Example: Cycle 9

Instruction status:

Instruction		*j*	*k*	*Issue*	*Read Oper*	*Exec Comp*	*Write Result*
LD	F6	34+	R2	1	2	3	4
LD	F2	45+	R3	5	6	7	8
MULTD	F0	F2	F4	6	9		
SUBD	F8	F6	F2	7	9		
DIVD	F10	F0	F6	8			
ADDD	F6	F8	F2				

Functional unit status:

Note Remaining

Time	*Name*	*Busy*	*Op*	*dest Fi*	*S1 Fj*	*S2 Fk*	*FU Qj*	*FU Qk*	*Fj? Rj*	*Fk? Rk*
	Integer	No								
10	Mult1	Yes	Mult	F0	F2	F4			Yes	Yes
	Mult2	No								
2	Add	Yes	Sub	F8	F6	F2			Yes	Yes
	Divide	Yes	Div	F10	F0	F6	Mult1		No	Yes

Register result status:

Clock		*F0*	*F2*	*F4*	*F6*	*F8*	*F10*	*F12*	...	*F30*
9	*FU*	Mult1				Add	Divide			

- **Read operands for MULT & SUB? Issue ADDD?**

Scoreboard Example: Cycle 10

Instruction status:

Instruction		*j*	*k*	*Issue*	*Read Oper*	*Exec Comp*	*Write Result*
LD	F6	34+	R2	1	2	3	4
LD	F2	45+	R3	5	6	7	8
MULTD	F0	F2	F4	6	9		
SUBD	F8	F6	F2	7	9		
DIVD	F10	F0	F6	8			
ADDD	F6	F8	F2				

Functional unit status:

Time	*Name*	*Busy*	*Op*	*dest Fi*	*S1 Fj*	*S2 Fk*	*FU Qj*	*FU Qk*	*Fj? Rj*	*Fk? Rk*
	Integer	No								
9	Mult1	Yes	Mult	F0	F2	F4			No	No
	Mult2	No								
1	Add	Yes	Sub	F8	F6	F2			No	No
	Divide	Yes	Div	F10	F0	F6	Mult1		No	Yes

Register result status:

Clock		*F0*	*F2*	*F4*	*F6*	*F8*	*F10*	*F12*	...	*F30*
10	*FU*	Mult1				Add	Divide			

Scoreboard Example: Cycle 11

Instruction status:

Instruction		*j*	*k*	*Issue*	*Read Oper*	*Exec Comp*	*Write Result*
LD	F6	34+	R2	1	2	3	4
LD	F2	45+	R3	5	6	7	8
MULTD	F0	F2	F4	6	9		
SUBD	F8	F6	F2	7	9	11	
DIVD	F10	F0	F6	8			
ADDD	F6	F8	F2				

Functional unit status:

Time	*Name*	*Busy*	*Op*	*dest Fi*	*S1 Fj*	*S2 Fk*	*FU Qj*	*FU Qk*	*Fj? Rj*	*Fk? Rk*
	Integer	No								
8	Mult1	Yes	Mult	F0	F2	F4			No	No
	Mult2	No								
0	Add	Yes	Sub	F8	F6	F2			No	No
	Divide	Yes	Div	F10	F0	F6	Mult1		No	Yes

Register result status:

Clock		*F0*	*F2*	*F4*	*F6*	*F8*	*F10*	*F12*	...	*F30*
11	*FU*	Mult1				Add	Divide			

Scoreboard Example: Cycle 12

Instruction status:

Instruction		*j*	*k*	*Issue*	*Read Oper*	*Exec Comp*	*Write Result*
LD	F6	34+	R2	1	2	3	4
LD	F2	45+	R3	5	6	7	8
MULTD	F0	F2	F4	6	9		
SUBD	F8	F6	F2	7	9	11	12
DIVD	F10	F0	F6	8			
ADDD	F6	F8	F2				

Functional unit status:

Time	*Name*	*Busy*	*Op*	*dest Fi*	*S1 Fj*	*S2 Fk*	*FU Qj*	*FU Qk*	*Fj? Rj*	*Fk? Rk*
	Integer	No								
7	Mult1	Yes	Mult	F0	F2	F4			No	No
	Mult2	No								
	Add	No								
	Divide	Yes	Div	F10	F0	F6	Mult1		No	Yes

Register result status:

Clock		*F0*	*F2*	*F4*	*F6*	*F8*	*F10*	*F12*	...	*F30*
12	*FU*	Mult1					Divide			

- **Read operands for DIVD?**

Scoreboard Example: Cycle 13

Instruction status:

Instruction		*j*	*k*	*Issue*	*Read Oper*	*Exec Comp*	*Write Result*
LD	F6	34+	R2	1	2	3	4
LD	F2	45+	R3	5	6	7	8
MULTD	F0	F2	F4	6	9		
SUBD	F8	F6	F2	7	9	11	12
DIVD	F10	F0	F6	8			
ADDD	F6	F8	F2	13			

Functional unit status:

Time	*Name*	*Busy*	*Op*	*dest Fi*	*S1 Fj*	*S2 Fk*	*FU Qj*	*FU Qk*	*Fj? Rj*	*Fk? Rk*
	Integer	No								
6	Mult1	Yes	Mult	F0	F2	F4			No	No
	Mult2	No								
	Add	Yes	Add	F6	F8	F2			Yes	Yes
	Divide	Yes	Div	F10	F0	F6	Mult1		No	Yes

Register result status:

Clock		*F0*	*F2*	*F4*	*F6*	*F8*	*F10*	*F12*	...	*F30*
13	*FU*	Mult1			Add		Divide			

Scoreboard Example: Cycle 14

Instruction status:

Instruction		*j*	*k*	*Issue*	*Read Oper*	*Exec Comp*	*Write Result*
LD	F6	34+	R2	1	2	3	4
LD	F2	45+	R3	5	6	7	8
MULTD	F0	F2	F4	6	9		
SUBD	F8	F6	F2	7	9	11	12
DIVD	F10	F0	F6	8			
ADDD	F6	F8	F2	13	14		

Functional unit status:

Time	*Name*	*Busy*	*Op*	*dest Fi*	*S1 Fj*	*S2 Fk*	*FU Qj*	*FU Qk*	*Fj? Rj*	*Fk? Rk*
	Integer	No								
5	Mult1	Yes	Mult	F0	F2	F4			No	No
	Mult2	No								
2	Add	Yes	Add	F6	F8	F2			Yes	Yes
	Divide	Yes	Div	F10	F0	F6	Mult1		No	Yes

Register result status:

Clock		*F0*	*F2*	*F4*	*F6*	*F8*	*F10*	*F12*	...	*F30*
14	*FU*	Mult1			Add		Divide			

Scoreboard Example: Cycle 15

Instruction status:

Instruction		*j*	*k*	*Issue*	*Read Oper*	*Exec Comp*	*Write Result*
LD	F6	34+	R2	1	2	3	4
LD	F2	45+	R3	5	6	7	8
MULTD	F0	F2	F4	6	9		
SUBD	F8	F6	F2	7	9	11	12
DIVD	F10	F0	F6	8			
ADDD	F6	F8	F2	13	14		

Functional unit status:

Time	*Name*	*Busy*	*Op*	*dest Fi*	*S1 Fj*	*S2 Fk*	*FU Qj*	*FU Qk*	*Fj? Rj*	*Fk? Rk*
	Integer	No								
4	Mult1	Yes	Mult	F0	F2	F4			No	No
	Mult2	No								
1	Add	Yes	Add	F6	F8	F2			No	No
	Divide	Yes	Div	F10	F0	F6	Mult1		No	Yes

Register result status:

Clock		*F0*	*F2*	*F4*	*F6*	*F8*	*F10*	*F12*	*...*	*F30*
15	*FU*	Mult1			Add		Divide			

Scoreboard Example: Cycle 16

Instruction status:

Instruction		*j*	*k*	*Issue*	*Read Oper*	*Exec Comp*	*Write Result*
LD	F6	34+	R2	1	2	3	4
LD	F2	45+	R3	5	6	7	8
MULTD	F0	F2	F4	6	9		
SUBD	F8	F6	F2	7	9	11	12
DIVD	F10	F0	F6	8			
ADDD	F6	F8	F2	13	14	16	

Functional unit status:

Time	*Name*	*Busy*	*Op*	*dest Fi*	*S1 Fj*	*S2 Fk*	*FU Qj*	*FU Qk*	*Fj? Rj*	*Fk? Rk*
	Integer	No								
3	Mult1	Yes	Mult	F0	F2	F4			No	No
	Mult2	No								
0	Add	Yes	Add	F6	F8	F2			No	No
	Divide	Yes	Div	F10	F0	F6	Mult1		No	Yes

Register result status:

Clock		*F0*	*F2*	*F4*	*F6*	*F8*	*F10*	*F12*	...	*F30*
16	*FU*	Mult1			Add		Divide			

Scoreboard Example: Cycle 17

Instruction status:

Instruction		*j*	*k*	*Issue*	*Read Oper*	*Exec Comp*	*Write Result*
LD	F6	34+	R2	1	2	3	4
LD	F2	45+	R3	5	6	7	8
MULTD	F0	F2	F4	6	9		
SUBD	F8	F6	F2	7	9	11	12
DIVD	F10	F0	F6	8			
ADDD	F6	F8	F2	13	14	16	

WAR Hazard!

Functional unit status:

Time	*Name*	*Busy*	*Op*	*dest Fi*	*S1 Fj*	*S2 Fk*	*FU Qj*	*FU Qk*	*Fj? Rj*	*Fk? Rk*
	Integer	No								
2	Mult1	Yes	Mult	F0	F2	F4			No	No
	Mult2	No								
	Add	Yes	Add	F6	F8	F2			No	No
	Divide	Yes	Div	F10	F0	F6	Mult1		No	Yes

Register result status:

Clock		*F0*	*F2*	*F4*	*F6*	*F8*	*F10*	*F12*	...	*F30*
17	*FU*	Mult1			Add		Divide			

- **Why not write result of ADD???**

Scoreboard Example: Cycle 18

Instruction status:

Instruction		*j*	*k*	*Issue*	*Read Oper*	*Exec Comp*	*Write Result*
LD	F6	34+	R2	1	2	3	4
LD	F2	45+	R3	5	6	7	8
MULTD	F0	F2	F4	6	9		
SUBD	F8	F6	F2	7	9	11	12
DIVD	F10	F0	F6	8			
ADDD	F6	F8	F2	13	14	16	

Functional unit status:

Time	*Name*	*Busy*	*Op*	*dest Fi*	*S1 Fj*	*S2 Fk*	*FU Qj*	*FU Qk*	*Fj? Rj*	*Fk? Rk*
	Integer	No								
1	Mult1	Yes	Mult	F0	F2	F4			No	No
	Mult2	No								
	Add	Yes	Add	F6	F8	F2			No	No
	Divide	Yes	Div	F10	F0	F6	Mult1		No	Yes

Register result status:

Clock		*F0*	*F2*	*F4*	*F6*	*F8*	*F10*	*F12*	...	*F30*
18	*FU*	Mult1			Add		Divide			

Scoreboard Example: Cycle 19

Instruction status:

Instruction		*j*	*k*	*Issue*	*Read Oper*	*Exec Comp*	*Write Result*
LD	F6	34+	R2	1	2	3	4
LD	F2	45+	R3	5	6	7	8
MULTD	F0	F2	F4	6	9	19	
SUBD	F8	F6	F2	7	9	11	12
DIVD	F10	F0	F6	8			
ADDD	F6	F8	F2	13	14	16	

Functional unit status:

Time	*Name*	*Busy*	*Op*	*dest Fi*	*S1 Fj*	*S2 Fk*	*FU Qj*	*FU Qk*	*Fj? Rj*	*Fk? Rk*
	Integer	No								
0	Mult1	Yes	Mult	F0	F2	F4			No	No
	Mult2	No								
	Add	Yes	Add	F6	F8	F2			No	No
	Divide	Yes	Div	F10	F0	F6	Mult1		No	Yes

Register result status:

Clock		*F0*	*F2*	*F4*	*F6*	*F8*	*F10*	*F12*	...	*F30*
19	*FU*	Mult1			Add		Divide			

Scoreboard Example: Cycle 20

Instruction status:

Instruction		*j*	*k*	*Issue*	*Read Oper*	*Exec Comp*	*Write Result*
LD	F6	34+	R2	1	2	3	4
LD	F2	45+	R3	5	6	7	8
MULTD	F0	F2	F4	6	9	19	20
SUBD	F8	F6	F2	7	9	11	12
DIVD	F10	F0	F6	8			
ADDD	F6	F8	F2	13	14	16	

Functional unit status:

Time	*Name*	*Busy*	*Op*	*dest Fi*	*S1 Fj*	*S2 Fk*	*FU Qj*	*FU Qk*	*Fj? Rj*	*Fk? Rk*
	Integer	No								
	Mult1	No								
	Mult2	No								
	Add	Yes	Add	F6	F8	F2			No	No
	Divide	Yes	Div	F10	F0	F6			Yes	Yes

Register result status:

Clock		*F0*	*F2*	*F4*	*F6*	*F8*	*F10*	*F12*	...	*F30*
20	*FU*				Add		Divide			

Scoreboard Example: Cycle 21

Instruction status:

Instruction		*j*	*k*	*Issue*	*Read Oper*	*Exec Comp*	*Write Result*
LD	F6	34+	R2	1	2	3	4
LD	F2	45+	R3	5	6	7	8
MULTD	F0	F2	F4	6	9	19	20
SUBD	F8	F6	F2	7	9	11	12
DIVD	F10	F0	F6	8	21		
ADDD	F6	F8	F2	13	14	16	

Functional unit status:

Time	*Name*	*Busy*	*Op*	*dest Fi*	*S1 Fj*	*S2 Fk*	*FU Qj*	*FU Qk*	*Fj? Rj*	*Fk? Rk*
	Integer	No								
	Mult1	No								
	Mult2	No								
	Add	Yes	Add	F6	F8	F2			No	No
	Divide	Yes	Div	F10	F0	F6			Yes	Yes

Register result status:

Clock		*F0*	*F2*	*F4*	*F6*	*F8*	*F10*	*F12*	...	*F30*
21	*FU*				Add		Divide			

- **WAR Hazard is now gone...**

Scoreboard Example: Cycle 22

Instruction status:

Instruction		*j*	*k*	*Issue*	*Read Oper*	*Exec Comp*	*Write Result*
LD	F6	34+	R2	1	2	3	4
LD	F2	45+	R3	5	6	7	8
MULTD	F0	F2	F4	6	9	19	20
SUBD	F8	F6	F2	7	9	11	12
DIVD	F10	F0	F6	8	21		
ADDD	F6	F8	F2	13	14	16	22

Functional unit status:

Time	*Name*	*Busy*	*Op*	*dest Fi*	*S1 Fj*	*S2 Fk*	*FU Qj*	*FU Qk*	*Fj? Rj*	*Fk? Rk*
	Integer	No								
	Mult1	No								
	Mult2	No								
	Add	No								
39	Divide	Yes	Div	F10	F0	F6			No	No

Register result status:

Clock		*F0*	*F2*	*F4*	*F6*	*F8*	*F10*	*F12*	...	*F30*
22	*FU*						Divide			

Faster than light computation (skip a couple of cycles)

Scoreboard Example: Cycle 61

Instruction status:

Instruction		*j*	*k*	*Issue*	*Read Oper*	*Exec Comp*	*Write Result*
LD	F6	34+	R2	1	2	3	4
LD	F2	45+	R3	5	6	7	8
MULTD	F0	F2	F4	6	9	19	20
SUBD	F8	F6	F2	7	9	11	12
DIVD	F10	F0	F6	8	21	61	
ADDD	F6	F8	F2	13	14	16	22

Functional unit status:

Time	*Name*	*Busy*	*Op*	*dest Fi*	*S1 Fj*	*S2 Fk*	*FU Qj*	*FU Qk*	*Fj? Rj*	*Fk? Rk*
	Integer	No								
	Mult1	No								
	Mult2	No								
	Add	No								
0	Divide	Yes	Div	F10	F0	F6			No	No

Register result status:

Clock		*F0*	*F2*	*F4*	*F6*	*F8*	*F10*	*F12*	...	*F30*
61	*FU*						Divide			

Scoreboard Example: Cycle 62

Instruction status:

Instruction		*j*	*k*	*Issue*	*Read Oper*	*Exec Comp*	*Write Result*
LD	F6	34+	R2	1	2	3	4
LD	F2	45+	R3	5	6	7	8
MULTD	F0	F2	F4	6	9	19	20
SUBD	F8	F6	F2	7	9	11	12
DIVD	F10	F0	F6	8	21	61	62
ADDD	F6	F8	F2	13	14	16	22

Functional unit status:

Time	*Name*	*Busy*	*Op*	*dest Fi*	*S1 Fj*	*S2 Fk*	*FU Qj*	*FU Qk*	*Fj? Rj*	*Fk? Rk*
	Integer	No								
	Mult1	No								
	Mult2	No								
	Add	No								
	Divide	No								

Register result status:

Clock		*F0*	*F2*	*F4*	*F6*	*F8*	*F10*	*F12*	...	*F30*
62	*FU*									

Review: Scoreboard Example: Cycle 62

Instruction status:

Instruction		*j*	*k*	*Issue*	*Read Oper*	*Exec Comp*	*Write Result*
LD	F6	34+	R2	1	2	3	4
LD	F2	45+	R3	5	6	7	8
MULTD	F0	F2	F4	6	9	19	20
SUBD	F8	F6	F2	7	9	11	12
DIVD	F10	F0	F6	8	21	61	62
ADDD	F6	F8	F2	13	14	16	22

Functional unit status:

Time	*Name*	*Busy*	*Op*	*dest Fi*	*S1 Fj*	*S2 Fk*	*FU Qj*	*FU Qk*	*Fj? Rj*	*Fk? Rk*
	Integer	No								
	Mult1	No								
	Mult2	No								
	Add	No								
	Divide	No								

Register result status:

Clock		*F0*	*F2*	*F4*	*F6*	*F8*	*F10*	*F12*	...	*F30*
62	*FU*									

- **In-order issue; out-of-order execute & commit**

CDC 6600 Scoreboard

- **Speedup 1.7 from compiler; 2.5 by hand BUT slow memory (no cache) limits benefit**
- **Limitations of 6600 scoreboard:**
  - **No forwarding hardware**
  - **Limited to instructions in basic block (small *window*)**
  - **Small number of functional units (structural hazards), especially integer/load store units**
  - **Do not issue on structural hazards**
  - **Wait for WAR hazards**
  - **Prevent WAW hazards**

Another Dynamic Algorithm: Tomasulo Algorithm

- For IBM 360/91 about 3 years after CDC 6600 (1966)
- Goal: High Performance without special compilers
- Differences between IBM 360 & CDC 6600 ISA
  - IBM has only 2 register specifiers/instr vs. 3 in CDC 6600
  - IBM has 4 FP registers vs. 8 in CDC 6600
  - IBM has memory-register ops
- Why Study? lead to Alpha 21264, HP 8000, MIPS 10000, Pentium II, PowerPC 604, …

Tomasulo Organization

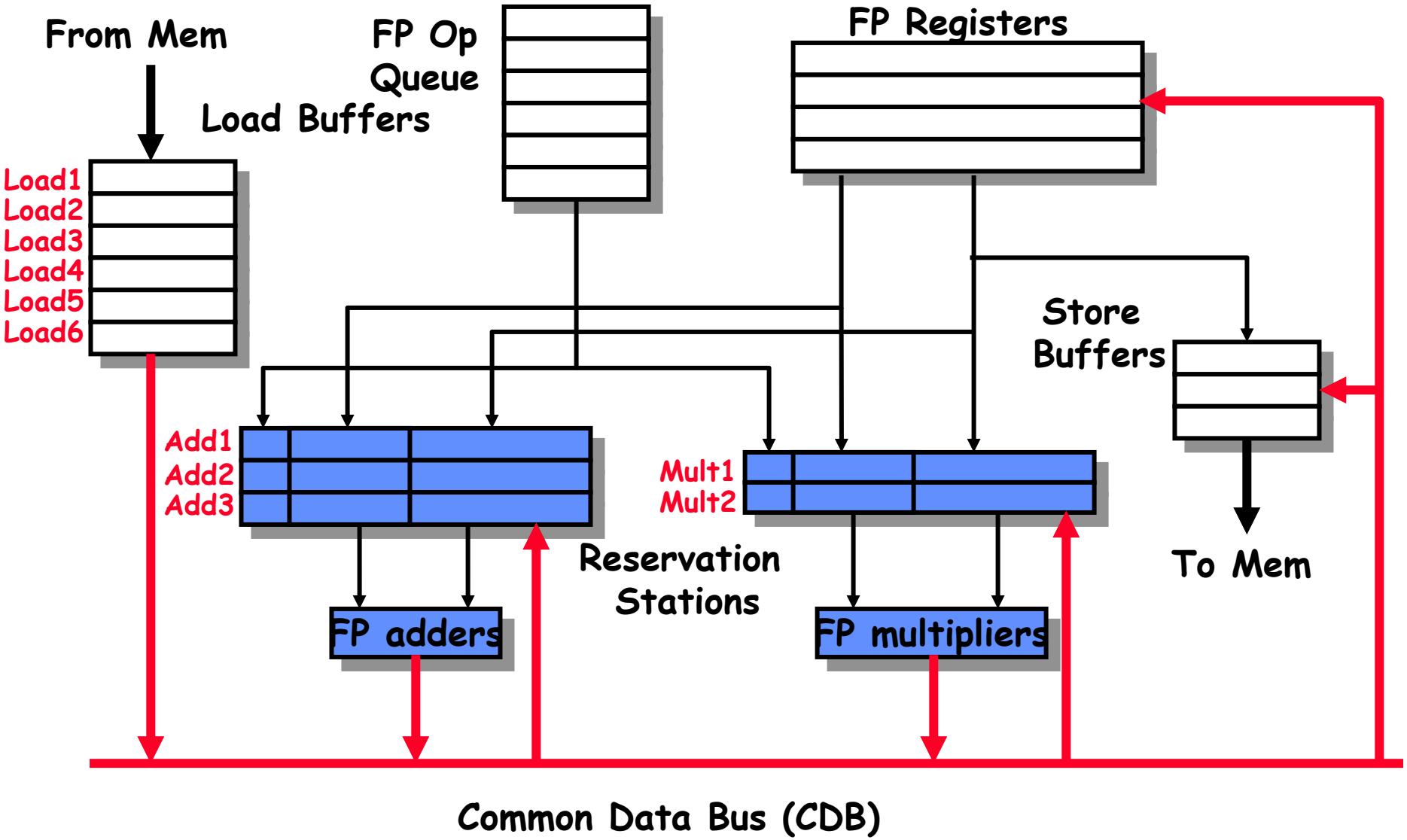

Tomasulo Algorithm vs. Scoreboard

- Control & buffers distributed with Function Units (FU) vs. centralized in scoreboard;
  - FU buffers called "reservation stations"; have pending operands
- Registers in instructions replaced by values or pointers to reservation stations(RS); called register renaming ;
  - avoids WAR, WAW hazards
  - More reservation stations than registers, so can do optimizations compilers can't
- Results to FU from RS, not through registers, over Common Data Bus that broadcasts results to all FUs
- Load and Stores treated as FUs with RSs as well
- Integer instructions can go past branches, allowing FP ops beyond basic block in FP queue

Reservation Station Components

Op: Operation to perform in the unit (e.g., + or –)

Vj, Vk: **Value** of Source operands

- Store buffers has V field, result to be stored

Qj, Qk: Reservation stations producing source registers (value to be written)

- Note: No ready flags as in Scoreboard; Qj,Qk=0 => ready
- Store buffers only have Qi for RS producing result

Busy: Indicates reservation station or FU is busy

Register result status—Indicates which functional unit will write each register, if one exists. Blank when no pending instructions that will write that register.

Three Stages of Tomasulo Algorithm

1. **Issue—get instruction from FP Op Queue**

   If reservation station free (no structural hazard), control issues instr & sends operands (renames registers).

2. **Execution—operate on operands (EX)**

   When both operands ready then execute; if not ready, watch Common Data Bus for result

3. **Write result—finish execution (WB)**

   Write on Common Data Bus to all awaiting units; mark reservation station available

- **Normal data bus: data + destination ("go to" bus)**
- **Common data bus: data + source ("come from" bus)**
  - **64 bits of data + 4 bits of Functional Unit source address**
  - **Write if matches expected Functional Unit (produces result)**
  - **Does the broadcast**

Tomasulo Example

Instruction status:

Instruction		*j*	*k*	*Issue*	*Exec Comp*	*Write Result*
LD	F6	34+	R2			
LD	F2	45+	R3			
MULTD	F0	F2	F4			
SUBD	F8	F6	F2			
DIVD	F10	F0	F6			
ADDD	F6	F8	F2			

	Busy	Address
Load1	No	
Load2	No	
Load3	No	

Reservation Stations:

Time	*Name*	*Busy*	*Op*	*S1 Vj*	*S2 Vk*	*RS Qj*	*RS Qk*
	Add1	No					
	Add2	No					
	Add3	No					
	Mult1	No					
	Mult2	No					

Register result status:

Clock		*F0*	*F2*	*F4*	*F6*	*F8*	*F10*	*F12*	...	*F30*
0	*FU*									

Tomasulo Example Cycle 1

Instruction status:

Instruction		*j*	*k*	*Issue*	*Exec Comp*	*Write Result*
LD	F6	34+	R2	1		
LD	F2	45+	R3			
MULTD	F0	F2	F4			
SUBD	F8	F6	F2			
DIVD	F10	F0	F6			
ADDD	F6	F8	F2			

	Busy	*Address*
Load1	Yes	34+R2
Load2	No	
Load3	No	

Reservation Stations:

Time	*Name*	*Busy*	*Op*	*S1 Vj*	*S2 Vk*	*RS Qj*	*RS Qk*
	Add1	No					
	Add2	No					
	Add3	No					
	Mult1	No					
	Mult2	No					

Register result status:

Clock		*F0*	*F2*	*F4*	*F6*	*F8*	*F10*	*F12*	...	*F30*
1	*FU*				Load1					

Tomasulo Example Cycle 2

Instruction status:

Instruction		*j*	*k*	*Issue*	*Exec Comp*	*Write Result*
LD	F6	34+	R2	1		
LD	F2	45+	R3	2		
MULTD	F0	F2	F4			
SUBD	F8	F6	F2			
DIVD	F10	F0	F6			
ADDD	F6	F8	F2			

	Busy	Address
Load1	Yes	34+R2
Load2	Yes	45+R3
Load3	No	

Reservation Stations:

Time	*Name*	*Busy*	*Op*	*S1 Vj*	*S2 Vk*	*RS Qj*	*RS Qk*
	Add1	No					
	Add2	No					
	Add3	No					
	Mult1	No					
	Mult2	No					

Register result status:

Clock		*F0*	*F2*	*F4*	*F6*	*F8*	*F10*	*F12*	...	*F30*
2	*FU*		Load2		Load1					

Note: Unlike 6600, can have multiple loads outstanding

Tomasulo Example Cycle 3

Instruction status:

Instruction		*j*	*k*	*Issue*	*Exec Comp*	*Write Result*
LD	F6	34+	R2	1	3	
LD	F2	45+	R3	2		
MULTD	F0	F2	F4	3		
SUBD	F8	F6	F2			
DIVD	F10	F0	F6			
ADDD	F6	F8	F2			

	Busy	Address
Load1	Yes	34+R2
Load2	Yes	45+R3
Load3	No	

Reservation Stations:

Time	*Name*	*Busy*	*Op*	*S1 Vj*	*S2 Vk*	*RS Qj*	*RS Qk*
	Add1	No					
	Add2	No					
	Add3	No					
	Mult1	Yes	MULTD		R(F4)	Load2	
	Mult2	No					

Register result status:

Clock		*F0*	*F2*	*F4*	*F6*	*F8*	*F10*	*F12*	...	*F30*
3	*FU*	Mult1	Load2		Load1					

- Note: registers names are removed ("renamed") in Reservation Stations; MULT issued vs. scoreboard
- Load1 completing; what is waiting for Load1?

Tomasulo Example Cycle 4

Instruction status:

Instruction		*j*	*k*	*Issue*	*Exec Comp*	*Write Result*
LD	F6	34+	R2	1	3	4
LD	F2	45+	R3	2	4	
MULTD	F0	F2	F4	3		
SUBD	F8	F6	F2	4		
DIVD	F10	F0	F6			
ADDD	F6	F8	F2			

	Busy	Address
Load1	No	
Load2	Yes	45+R3
Load3	No	

Reservation Stations:

Time	*Name*	*Busy*	*Op*	*S1 Vj*	*S2 Vk*	*RS Qj*	*RS Qk*
	Add1	Yes	SUBD	M(A1)			Load2
	Add2	No					
	Add3	No					
	Mult1	Yes	MULTD		R(F4)	Load2	
	Mult2	No					

Register result status:

Clock		*F0*	*F2*	*F4*	*F6*	*F8*	*F10*	*F12*	...	*F30*
4	*FU*	Mult1	Load2		M(A1)	Add1				

- **Load2 completing; what is waiting for Load2?**

Tomasulo Example Cycle 5

Instruction status:

Instruction		*j*	*k*	*Issue*	*Exec Comp*	*Write Result*
LD	F6	34+	R2	1	3	4
LD	F2	45+	R3	2	4	5
MULTD	F0	F2	F4	3		
SUBD	F8	F6	F2	4		
DIVD	F10	F0	F6	5		
ADDD	F6	F8	F2			

	Busy	Address
Load1	No	
Load2	No	
Load3	No	

Reservation Stations:

Time	*Name*	*Busy*	*Op*	*S1 Vj*	*S2 Vk*	*RS Qj*	*RS Qk*
2	Add1	Yes	SUBD	M(A1)	M(A2)		
	Add2	No					
	Add3	No					
10	Mult1	Yes	MULTD	M(A2)	R(F4)		
	Mult2	Yes	DIVD		M(A1)	Mult1	

Register result status:

Clock		*F0*	*F2*	*F4*	*F6*	*F8*	*F10*	*F12*	...	*F30*
5	*FU*	Mult1	M(A2)		M(A1)	Add1	Mult2			

Tomasulo Example Cycle 6

Instruction status:

Instruction		*j*	*k*	*Issue*	*Exec Comp*	*Write Result*
LD	F6	34+	R2	1	3	4
LD	F2	45+	R3	2	4	5
MULTD	F0	F2	F4	3		
SUBD	F8	F6	F2	4		
DIVD	F10	F0	F6	5		
ADDD	F6	F8	F2	6		

	Busy	Address
Load1	No	
Load2	No	
Load3	No	

Reservation Stations:

Time	*Name*	*Busy*	*Op*	*S1 Vj*	*S2 Vk*	*RS Qj*	*RS Qk*
1	Add1	Yes	SUBD	M(A1)	M(A2)		
	Add2	Yes	ADDD		M(A2)	Add1	
	Add3	No					
9	Mult1	Yes	MULTD	M(A2)	R(F4)		
	Mult2	Yes	DIVD		M(A1)	Mult1	

Register result status:

Clock		*F0*	*F2*	*F4*	*F6*	*F8*	*F10*	*F12*	...	*F30*
6	*FU*	Mult1	M(A2)		Add2	Add1	Mult2			

- **Issue ADDD here vs. scoreboard?**

Tomasulo Example Cycle 7

Instruction status:

Instruction		*j*	*k*	*Issue*	*Exec Comp*	*Write Result*
LD	F6	34+	R2	1	3	4
LD	F2	45+	R3	2	4	5
MULTD	F0	F2	F4	3		
SUBD	F8	F6	F2	4	7	
DIVD	F10	F0	F6	5		
ADDD	F6	F8	F2	6		

	Busy	Address
Load1	No	
Load2	No	
Load3	No	

Reservation Stations:

Time	*Name*	*Busy*	*Op*	*S1 Vj*	*S2 Vk*	*RS Qj*	*RS Qk*
0	Add1	Yes	SUBD	M(A1)	M(A2)		
	Add2	Yes	ADDD		M(A2)	Add1	
	Add3	No					
8	Mult1	Yes	MULTD	M(A2)	R(F4)		
	Mult2	Yes	DIVD		M(A1)	Mult1	

Register result status:

Clock		*F0*	*F2*	*F4*	*F6*	*F8*	*F10*	*F12*	...	*F30*
7	*FU*	Mult1	M(A2)		Add2	Add1	Mult2			

- **Add1 completing; what is waiting for it?**

Tomasulo Example Cycle 8

Instruction status:

Instruction		*j*	*k*	*Issue*	*Exec Comp*	*Write Result*
LD	F6	34+	R2	1	3	4
LD	F2	45+	R3	2	4	5
MULTD	F0	F2	F4	3		
SUBD	F8	F6	F2	4	7	8
DIVD	F10	F0	F6	5		
ADDD	F6	F8	F2	6		

	Busy	Address
Load1	No	
Load2	No	
Load3	No	

Reservation Stations:

Time	*Name*	*Busy*	*Op*	*S1 Vj*	*S2 Vk*	*RS Qj*	*RS Qk*
	Add1	No					
2	Add2	Yes	ADDD	(M-M)	M(A2)		
	Add3	No					
7	Mult1	Yes	MULTD	M(A2)	R(F4)		
	Mult2	Yes	DIVD		M(A1)	Mult1	

Register result status:

Clock		*F0*	*F2*	*F4*	*F6*	*F8*	*F10*	*F12*	...	*F30*
8	*FU*	Mult1	M(A2)		Add2	(M-M)	Mult2			

Tomasulo Example Cycle 9

Instruction status:

Instruction		*j*	*k*	*Issue*	*Exec Comp*	*Write Result*
LD	F6	34+	R2	1	3	4
LD	F2	45+	R3	2	4	5
MULTD	F0	F2	F4	3		
SUBD	F8	F6	F2	4	7	8
DIVD	F10	F0	F6	5		
ADDD	F6	F8	F2	6		

	Busy	Address
Load1	No	
Load2	No	
Load3	No	

Reservation Stations:

Time	*Name*	*Busy*	*Op*	*S1 Vj*	*S2 Vk*	*RS Qj*	*RS Qk*
	Add1	No					
1	Add2	Yes	ADDD	(M-M)	M(A2)		
	Add3	No					
6	Mult1	Yes	MULTD	M(A2)	R(F4)		
	Mult2	Yes	DIVD		M(A1)	Mult1	

Register result status:

Clock		*F0*	*F2*	*F4*	*F6*	*F8*	*F10*	*F12*	...	*F30*
9	*FU*	Mult1	M(A2)		Add2	(M-M)	Mult2			

Tomasulo Example Cycle 10

Instruction status:

Instruction		*j*	*k*	*Issue*	*Exec Comp*	*Write Result*
LD	F6	34+	R2	1	3	4
LD	F2	45+	R3	2	4	5
MULTD	F0	F2	F4	3		
SUBD	F8	F6	F2	4	7	8
DIVD	F10	F0	F6	5		
ADDD	F6	F8	F2	6	10	

	Busy	Address
Load1	No	
Load2	No	
Load3	No	

Reservation Stations:

Time	*Name*	*Busy*	*Op*	*S1 Vj*	*S2 Vk*	*RS Qj*	*RS Qk*
	Add1	No					
0	Add2	Yes	ADDD	(M-M)	M(A2)		
	Add3	No					
5	Mult1	Yes	MULTD	M(A2)	R(F4)		
	Mult2	Yes	DIVD		M(A1)	Mult1	

Register result status:

Clock		*F0*	*F2*	*F4*	*F6*	*F8*	*F10*	*F12*	...	*F30*
10	*FU*	Mult1	M(A2)		Add2	(M-M)	Mult2			

- **Add2 completing; what is waiting for it?**

Tomasulo Example Cycle 11

Instruction status:

Instruction		*j*	*k*	*Issue*	*Exec Comp*	*Write Result*
LD	F6	34+	R2	1	3	4
LD	F2	45+	R3	2	4	5
MULTD	F0	F2	F4	3		
SUBD	F8	F6	F2	4	7	8
DIVD	F10	F0	F6	5		
ADDD	F6	F8	F2	6	10	11

	Busy	Address
Load1	No	
Load2	No	
Load3	No	

Reservation Stations:

Time	*Name*	*Busy*	*Op*	*S1 Vj*	*S2 Vk*	*RS Qj*	*RS Qk*
	Add1	No					
	Add2	No					
	Add3	No					
4	Mult1	Yes	MULTD	M(A2)	R(F4)		
	Mult2	Yes	DIVD		M(A1)	Mult1	

Register result status:

Clock		*F0*	*F2*	*F4*	*F6*	*F8*	*F10*	*F12*	...	*F30*
11	*FU*	Mult1	M(A2)		(M-M+M	(M-M)	Mult2			

- **Write result of ADDD here vs. scoreboard?**
- **All quick instructions complete in this cycle!**

Tomasulo Example Cycle 12

Instruction status:

Instruction		*j*	*k*	*Issue*	*Exec Comp*	*Write Result*
LD	F6	34+	R2	1	3	4
LD	F2	45+	R3	2	4	5
MULTD	F0	F2	F4	3		
SUBD	F8	F6	F2	4	7	8
DIVD	F10	F0	F6	5		
ADDD	F6	F8	F2	6	10	11

	Busy	Address
Load1	No	
Load2	No	
Load3	No	

Reservation Stations:

Time	*Name*	*Busy*	*Op*	*S1 Vj*	*S2 Vk*	*RS Qj*	*RS Qk*
	Add1	No					
	Add2	No					
	Add3	No					
3	Mult1	Yes	MULTD	M(A2)	R(F4)		
	Mult2	Yes	DIVD		M(A1)	Mult1	

Register result status:

Clock		*F0*	*F2*	*F4*	*F6*	*F8*	*F10*	*F12*	...	*F30*
12	*FU*	Mult1	M(A2)		(M-M+M	(M-M)	Mult2			

Tomasulo Example Cycle 13

Instruction status:

Instruction		*j*	*k*	*Issue*	*Exec Comp*	*Write Result*
LD	F6	34+	R2	1	3	4
LD	F2	45+	R3	2	4	5
MULTD	F0	F2	F4	3		
SUBD	F8	F6	F2	4	7	8
DIVD	F10	F0	F6	5		
ADDD	F6	F8	F2	6	10	11

	Busy	Address
Load1	No	
Load2	No	
Load3	No	

Reservation Stations:

Time	*Name*	*Busy*	*Op*	*S1 Vj*	*S2 Vk*	*RS Qj*	*RS Qk*
	Add1	No					
	Add2	No					
	Add3	No					
2	Mult1	Yes	MULTD	M(A2)	R(F4)		
	Mult2	Yes	DIVD		M(A1)	Mult1	

Register result status:

Clock		*F0*	*F2*	*F4*	*F6*	*F8*	*F10*	*F12*	...	*F30*
13	*FU*	Mult1	M(A2)		(M-M+M	(M-M)	Mult2			

Tomasulo Example Cycle 14

Instruction status:

Instruction		*j*	*k*	*Issue*	*Exec Comp*	*Write Result*
LD	F6	34+	R2	1	3	4
LD	F2	45+	R3	2	4	5
MULTD	F0	F2	F4	3		
SUBD	F8	F6	F2	4	7	8
DIVD	F10	F0	F6	5		
ADDD	F6	F8	F2	6	10	11

	Busy	Address
Load1	No	
Load2	No	
Load3	No	

Reservation Stations:

Time	*Name*	*Busy*	*Op*	*S1 Vj*	*S2 Vk*	*RS Qj*	*RS Qk*
	Add1	No					
	Add2	No					
	Add3	No					
1	Mult1	Yes	MULTD	M(A2)	R(F4)		
	Mult2	Yes	DIVD		M(A1)	Mult1	

Register result status:

Clock		*F0*	*F2*	*F4*	*F6*	*F8*	*F10*	*F12*	...	*F30*
14	*FU*	Mult1	M(A2)		(M-M+M	(M-M)	Mult2			

Tomasulo Example Cycle 15

Instruction status:

Instruction		*j*	*k*	*Issue*	*Exec Comp*	*Write Result*
LD	F6	34+	R2	1	3	4
LD	F2	45+	R3	2	4	5
MULTD	F0	F2	F4	3	15	
SUBD	F8	F6	F2	4	7	8
DIVD	F10	F0	F6	5		
ADDD	F6	F8	F2	6	10	11

	Busy	Address
Load1	No	
Load2	No	
Load3	No	

Reservation Stations:

Time	*Name*	*Busy*	*Op*	*S1 Vj*	*S2 Vk*	*RS Qj*	*RS Qk*
	Add1	No					
	Add2	No					
	Add3	No					
0	Mult1	Yes	MULTD	M(A2)	R(F4)		
	Mult2	Yes	DIVD		M(A1)	Mult1	

Register result status:

Clock		*F0*	*F2*	*F4*	*F6*	*F8*	*F10*	*F12*	...	*F30*
15	*FU*	Mult1	M(A2)		(M-M+M	(M-M)	Mult2			

Tomasulo Example Cycle 16

Instruction status:

Instruction		*j*	*k*	*Issue*	*Exec Comp*	*Write Result*
LD	F6	34+	R2	1	3	4
LD	F2	45+	R3	2	4	5
MULTD	F0	F2	F4	3	15	16
SUBD	F8	F6	F2	4	7	8
DIVD	F10	F0	F6	5		
ADDD	F6	F8	F2	6	10	11

	Busy	Address
Load1	No	
Load2	No	
Load3	No	

Reservation Stations:

Time	*Name*	*Busy*	*Op*	*S1 Vj*	*S2 Vk*	*RS Qj*	*RS Qk*
	Add1	No					
	Add2	No					
	Add3	No					
	Mult1	No					
40	Mult2	Yes	DIVD	M*F4	M(A1)		

Register result status:

Clock		*F0*	*F2*	*F4*	*F6*	*F8*	*F10*	*F12*	...	*F30*
16	*FU*	M*F4	M(A2)		(M-M+M	(M-M)	Mult2			

Faster than light computation (skip a couple of cycles)

Tomasulo Example Cycle 55

Instruction status:

Instruction		*j*	*k*	*Issue*	*Exec Comp*	*Write Result*
LD	F6	34+	R2	1	3	4
LD	F2	45+	R3	2	4	5
MULTD	F0	F2	F4	3	15	16
SUBD	F8	F6	F2	4	7	8
DIVD	F10	F0	F6	5		
ADDD	F6	F8	F2	6	10	11

	Busy	Address
Load1	No	
Load2	No	
Load3	No	

Reservation Stations:

Time	*Name*	*Busy*	*Op*	*S1 Vj*	*S2 Vk*	*RS Qj*	*RS Qk*
	Add1	No					
	Add2	No					
	Add3	No					
	Mult1	No					
1	Mult2	Yes	DIVD	M*F4	M(A1)		

Register result status:

Clock		*F0*	*F2*	*F4*	*F6*	*F8*	*F10*	*F12*	...	*F30*
55	*FU*	M*F4	M(A2)		(M-M+M	(M-M)	Mult2			

Tomasulo Example Cycle 56

Instruction status:

Instruction		*j*	*k*	*Issue*	*Exec Comp*	*Write Result*
LD	F6	34+	R2	1	3	4
LD	F2	45+	R3	2	4	5
MULTD	F0	F2	F4	3	15	16
SUBD	F8	F6	F2	4	7	8
DIVD	F10	F0	F6	5	56	
ADDD	F6	F8	F2	6	10	11

	Busy	Address
Load1	No	
Load2	No	
Load3	No	

Reservation Stations:

Time	*Name*	*Busy*	*Op*	*S1 Vj*	*S2 Vk*	*RS Qj*	*RS Qk*
	Add1	No					
	Add2	No					
	Add3	No					
	Mult1	No					
0	Mult2	Yes	DIVD	M*F4	M(A1)		

Register result status:

Clock		*F0*	*F2*	*F4*	*F6*	*F8*	*F10*	*F12*	...	*F30*
56	*FU*	M*F4	M(A2)		(M-M+M	(M-M)	Mult2			

- **Mult2 is completing; what is waiting for it?**

Tomasulo Example Cycle 57

Instruction status:

Instruction		*j*	*k*	*Issue*	*Exec Comp*	*Write Result*
LD	F6	34+	R2	1	3	4
LD	F2	45+	R3	2	4	5
MULTD	F0	F2	F4	3	15	16
SUBD	F8	F6	F2	4	7	8
DIVD	F10	F0	F6	5	56	57
ADDD	F6	F8	F2	6	10	11

	Busy	Address
Load1	No	
Load2	No	
Load3	No	

Reservation Stations:

Time	*Name*	*Busy*	*Op*	*S1 Vj*	*S2 Vk*	*RS Qj*	*RS Qk*
	Add1	No					
	Add2	No					
	Add3	No					
	Mult1	No					
	Mult2	Yes	DIVD	M*F4	M(A1)		

Register result status:

Clock		*F0*	*F2*	*F4*	*F6*	*F8*	*F10*	*F12*	...	*F30*
56	*FU*	M*F4	M(A2)		(M-M+M	(M-M)	Result			

- **Once again: In-order issue, out-of-order execution and completion.**

Compare to Scoreboard Cycle 62

Instruction status:

Instruction		*j*	*k*	*Issue*	*Read Oper*	*Exec Comp*	*Write Result*	*Issue*	*Exec Comp*	*Write Result*
LD	F6	34+	R2	1	2	3	4	1	3	4
LD	F2	45+	R3	5	6	7	8	2	4	5
MULTD	F0	F2	F4	6	9	19	20	3	15	16
SUBD	F8	F6	F2	7	9	11	12	4	7	8
DIVD	F10	F0	F6	8	21	61	62	5	56	57
ADDD	F6	F8	F2	13	14	16	22	6	10	11

- Why take longer on scoreboard/6600?
  - Structural Hazards
  - Lack of forwarding

Tomasulo v. Scoreboard (IBM 360/91 v. CDC 6600)

Pipelined Functional Units	Multiple Functional Units
(6 load, 3 store, 3 +, 2 x/÷)	(1 load/store, 1 + , 2 x, 1 ÷)
window size: ≤ 14 instructions	≤ 5 instructions
No issue on structural hazard	same
WAR: renaming avoids	stall completion
WAW: renaming avoids	stall issue
Broadcast results from FU	Write/read registers
Control: reservation stations	central scoreboard

Recall: Unrolled Loop That Minimizes Stalls

```
1  Loop: LD     F0,0(R1)
2        LD     F6,-8(R1)
3        LD     F10,-16(R1)
4        LD     F14,-24(R1)
5        ADDD   F4,F0,F2
6        ADDD   F8,F6,F2
7        ADDD   F12,F10,F2
8        ADDD   F16,F14,F2
9        SD     0(R1),F4
10       SD     -8(R1),F8
11       SD     -16(R1),F12
12       SUBI   R1,R1,#32
13       BNEZ   R1,LOOP
14       SD     8(R1),F16     ; 8-32 = -24
```

- **What assumptions made when moved code?**
  - **OK to move store past SUBI even though changes register**
  - **OK to move loads before stores: get right data?**
  - **When is it safe for compiler to do such changes?**

14 clock cycles, or 3.5 per iteration

Tomasulo Loop Example

```
Loop: LD      F0    0     R1
      MULTD   F4    F0    F2
      SD      F4    0     R1
      SUBI    R1    R1    #8
      BNEZ    R1    Loop
```

- **Assume Multiply takes 4 clocks**
- **Assume first load takes 8 clocks (cache miss), second load takes 1 clock (hit)**
- **To be clear, will show clocks for SUBI, BNEZ**
- **Reality: integer instructions ahead**

Loop Example

Instruction status:

ITER	Instruction		*j*	*k*	*Issue*	*Exec Comp*	*Write Result*
1	LD	F0	0	R1			
1	MULTD	F4	F0	F2			
1	SD	F4	0	R1			
2	LD	F0	0	R1			
2	MULTD	F4	F0	F2			
2	SD	F4	0	R1			

	Busy	*Addr*	*Fu*
Load1	No		
Load2	No		
Load3	No		
Store1	No		
Store2	No		
Store3	No		

Reservation Stations:

Time	*Name*	*Busy*	*Op*	*Vj*	*S1 Vk*	*S2 Qj*	*RS Qk*
	Add1	No					
	Add2	No					
	Add3	No					
	Mult1	No					
	Mult2	No					

Code:

LD	F0	0	R1
MULTD	F4	F0	F2
SD	F4	0	R1
SUBI	R1	R1	#8
BNEZ	R1	Loop	

Register result status

Clock	**R1**		*F0*	*F2*	*F4*	*F6*	*F8*	*F10*	*F12*	...	*F30*
0	**80**	*Fu*									

Loop Example Cycle 1

Instruction status:

ITER	Instruction		*j*	*k*	*Issue*	*Exec Comp*	*Write Result*
1	LD	F0	0	R1	1		
1	MULTD	F4	F0	F2			
1	SD	F4	0	R1			
2	LD	F0	0	R1			
2	MULTD	F4	F0	F2			
2	SD	F4	0	R1			

	Busy	*Addr*	*Fu*
Load1	Yes	80	
Load2	No		
Load3	No		
Store1	No		
Store2	No		
Store3	No		

Reservation Stations:

Time	*Name*	*Busy*	*Op*	*Vj*	*S1 Vk*	*S2 Qj*	*RS Qk*
	Add1	No					
	Add2	No					
	Add3	No					
	Mult1	No					
	Mult2	No					

Code:

LD	F0	0	R1
MULTD	F4	F0	F2
SD	F4	0	R1
SUBI	R1	R1	#8
BNEZ	R1	Loop	

Register result status

Clock	**R1**		*F0*	*F2*	*F4*	*F6*	*F8*	*F10*	*F12*	...	*F30*
1	**80**	*Fu*	Load1								

Loop Example Cycle 2

Instruction status:

ITER	Instruction		*j*	*k*	*Issue*	*Exec Comp*	*Write Result*
1	LD	F0	0	R1	1		
1	MULTD	F4	F0	F2	2		
1	SD	F4	0	R1			
2	LD	F0	0	R1			
2	MULTD	F4	F0	F2			
2	SD	F4	0	R1			

	Busy	*Addr*	*Fu*
Load1	Yes	80	
Load2	No		
Load3	No		
Store1	No		
Store2	No		
Store3	No		

Reservation Stations:

Time	*Name*	*Busy*	*Op*	*Vj*	*S1 Vk*	*S2 Qj*	*RS Qk*
	Add1	No					
	Add2	No					
	Add3	No					
	Mult1	Yes	Multd		R(F4)	Load1	
	Mult2	No					

Code:

LD	F0	0	R1
MULTD	F4	F0	F2
SD	F4	0	R1
SUBI	R1	R1	#8
BNEZ	R1	Loop	

Register result status

Clock	**R1**		*F0*	*F2*	*F4*	*F6*	*F8*	*F10*	*F12*	*...*	*F30*
2	**80**	*Fu*	Load1		Mult1						

Loop Example Cycle 3

Instruction status:

ITER	Instruction		*j*	*k*	*Issue*	*Exec Comp*	*Write Result*
1	LD	F0	0	R1	1		
1	MULTD	F4	F0	F2	2		
1	SD	F4	0	R1	3		
2	LD	F0	0	R1			
2	MULTD	F4	F0	F2			
2	SD	F4	0	R1			

	Busy	*Addr*	*Fu*
Load1	Yes	80	
Load2	No		
Load3	No		
Store1	Yes	80	Mult1
Store2	No		
Store3	No		

Reservation Stations:

Time	*Name*	*Busy*	*Op*	*Vj*	*S1 Vk*	*S2 Qj*	*RS Qk*
	Add1	No					
	Add2	No					
	Add3	No					
	Mult1	Yes	Multd		R(F4)	Load1	
	Mult2	No					

Code:

LD	F0	0	R1
MULTD	F4	F0	F2
SD	F4	0	R1
SUBI	R1	R1	#8
BNEZ	R1	Loop	

Register result status

Clock	**R1**		*F0*	*F2*	*F4*	*F6*	*F8*	*F10*	*F12*	...	*F30*
3	**80**	*Fu*	Load1		Mult1						

- **Implicit renaming sets up "DataFlow" graph**

Loop Example Cycle 4

Instruction status:

ITER	Instruction		*j*	*k*	*Issue*	*Exec Comp*	*Write Result*
1	LD	F0	0	R1	1		
1	MULTD	F4	F0	F2	2		
1	SD	F4	0	R1	3		
2	LD	F0	0	R1			
2	MULTD	F4	F0	F2			
2	SD	F4	0	R1			

	Busy	*Addr*	*Fu*
Load1	Yes	80	
Load2	No		
Load3	No		
Store1	Yes	80	Mult1
Store2	No		
Store3	No		

Reservation Stations:

Time	*Name*	*Busy*	*Op*	*Vj*	*S1 Vk*	*S2 Qj*	*RS Qk*
	Add1	No					
	Add2	No					
	Add3	No					
	Mult1	Yes	Multd		R(F4)	Load1	
	Mult2	No					

Code:

LD	F0	0	R1
MULTD	F4	F0	F2
SD	F4	0	R1
SUBI	R1	R1	#8
BNEZ	R1	Loop	

Register result status

Clock	**R1**		*F0*	*F2*	*F4*	*F6*	*F8*	*F10*	*F12*	...	*F30*
4	**80**	*Fu*	Load1		Mult1						

- **Dispatching SUBI Instruction**

Loop Example Cycle 5

Instruction status:

ITER	Instruction		*j*	*k*	*Issue*	*Exec Comp*	*Write Result*
1	LD	F0	0	R1	1		
1	MULTD	F4	F0	F2	2		
1	SD	F4	0	R1	3		
2	LD	F0	0	R1			
2	MULTD	F4	F0	F2			
2	SD	F4	0	R1			

	Busy	*Addr*	*Fu*
Load1	Yes	80	
Load2	No		
Load3	No		
Store1	Yes	80	Mult1
Store2	No		
Store3	No		

Reservation Stations:

Time	*Name*	*Busy*	*Op*	*Vj*	*S1 Vk*	*S2 Qj*	*RS Qk*
	Add1	No					
	Add2	No					
	Add3	No					
	Mult1	Yes	Multd		R(F4)	Load1	
	Mult2	No					

Code:

LD	F0	0	R1
MULTD	F4	F0	F2
SD	F4	0	R1
SUBI	R1	R1	#8
BNEZ	R1	Loop	

Register result status

Clock	**R1**		*F0*	*F2*	*F4*	*F6*	*F8*	*F10*	*F12*	...	*F30*
5	**72**	*Fu*	Load1		Mult1						

- **And, BNEZ instruction**

Loop Example Cycle 6

Instruction status:

ITER	Instruction		*j*	*k*	*Issue*	*Exec Comp*	*Write Result*
1	LD	F0	0	R1	1		
1	MULTD	F4	F0	F2	2		
1	SD	F4	0	R1	3		
2	LD	F0	0	R1	6		
2	MULTD	F4	F0	F2			
2	SD	F4	0	R1			

	Busy	*Addr*	*Fu*
Load1	Yes	80	
Load2	Yes	72	
Load3	No		
Store1	Yes	80	Mult1
Store2	No		
Store3	No		

Reservation Stations:

Time	*Name*	*Busy*	*Op*	*Vj*	*S1 Vk*	*S2 Qj*	*RS Qk*
	Add1	No					
	Add2	No					
	Add3	No					
	Mult1	Yes	Multd		R(F4)	Load1	
	Mult2	No					

Code:

LD	F0	0	R1
MULTD	F4	F0	F2
SD	F4	0	R1
SUBI	R1	R1	#8
BNEZ	R1	Loop	

Register result status

Clock	**R1**		*F0*	*F2*	*F4*	*F6*	*F8*	*F10*	*F12*	*...*	*F30*
6	**72**	*Fu*	Load2		Mult1						

- **Notice that F0 never sees Load from location 80**

Loop Example Cycle 7

Instruction status:

ITER	Instruction		*j*	*k*	*Issue*	*Exec Comp*	*Write Result*
1	LD	F0	0	R1	1		
1	MULTD	F4	F0	F2	2		
1	SD	F4	0	R1	3		
2	LD	F0	0	R1	6		
2	MULTD	F4	F0	F2	7		
2	SD	F4	0	R1			

	Busy	*Addr*	*Fu*
Load1	Yes	80	
Load2	Yes	72	
Load3	No		
Store1	Yes	80	Mult1
Store2	No		
Store3	No		

Reservation Stations:

Time	*Name*	*Busy*	*Op*	*Vj*	*S1 Vk*	*S2 Qj*	*RS Qk*
	Add1	No					
	Add2	No					
	Add3	No					
	Mult1	Yes	Multd		R(F2)	Load1	
	Mult2	Yes	Multd		R(F2)	Load2	

Code:

LD	F0	0	R1
MULTD	F4	F0	F2
SD	F4	0	R1
SUBI	R1	R1	#8
BNEZ	R1	Loop	

Register result status

Clock	**R1**		*F0*	*F2*	*F4*	*F6*	*F8*	*F10*	*F12*	*...*	*F30*
7	**72**	*Fu*	Load2		Mult2						

- **Register file completely detached from computation**
- **First and Second iteration completely overlapped**

Loop Example Cycle 8

Instruction status:

ITER	Instruction		*j*	*k*	*Issue*	*Exec Comp*	*Write Result*
1	LD	F0	0	R1	1		
1	MULTD	F4	F0	F2	2		
1	SD	F4	0	R1	3		
2	LD	F0	0	R1	6		
2	MULTD	F4	F0	F2	7		
2	SD	F4	0	R1	8		

	Busy	*Addr*	*Fu*
Load1	Yes	80	
Load2	Yes	72	
Load3	No		
Store1	Yes	80	Mult1
Store2	Yes	72	Mult2
Store3	No		

Reservation Stations:

Time	*Name*	*Busy*	*Op*	*Vj*	*S1 Vk*	*S2 Qj*	*RS Qk*
	Add1	No					
	Add2	No					
	Add3	No					
	Mult1	Yes	Multd		R(F2)	Load1	
	Mult2	Yes	Multd		R(F2)	Load2	

Code:

LD	F0	0	R1
MULTD	F4	F0	F2
SD	F4	0	R1
SUBI	R1	R1	#8
BNEZ	R1	Loop	

Register result status

Clock	**R1**		*F0*	*F2*	*F4*	*F6*	*F8*	*F10*	*F12*	...	*F30*
8	**72**	*Fu*	Load2		Mult2						

Loop Example Cycle 9

Instruction status:

ITER	Instruction		*j*	*k*	*Issue*	*Exec Comp*	*Write Result*
1	LD	F0	0	R1	1	9	
1	MULTD	F4	F0	F2	2		
1	SD	F4	0	R1	3		
2	LD	F0	0	R1	6		
2	MULTD	F4	F0	F2	7		
2	SD	F4	0	R1	8		

	Busy	*Addr*	*Fu*
Load1	Yes	80	
Load2	Yes	72	
Load3	No		
Store1	Yes	80	Mult1
Store2	Yes	72	Mult2
Store3	No		

Reservation Stations:

Time	*Name*	*Busy*	*Op*	*Vj*	*S1 Vk*	*S2 Qj*	*RS Qk*
	Add1	No					
	Add2	No					
	Add3	No					
	Mult1	Yes	Multd		R(F2)	Load1	
	Mult2	Yes	Multd		R(F2)	Load2	

Code:

LD	F0	0	R1
MULTD	F4	F0	F2
SD	F4	0	R1
SUBI	R1	R1	#8
BNEZ	R1	Loop	

Register result status

Clock	**R1**		*F0*	*F2*	*F4*	*F6*	*F8*	*F10*	*F12*	...	*F30*
9	**72**	*Fu*	Load2		Mult2						

- **Load1 completing: who is waiting?**
- **Note: Dispatching SUBI**

Loop Example Cycle 10

Instruction status:

ITER	Instruction		*j*	*k*	*Issue*	*Exec Comp*	*Write Result*
1	LD	F0	0	R1	1	9	10
1	MULTD	F4	F0	F2	2		
1	SD	F4	0	R1	3		
2	LD	F0	0	R1	6	10	
2	MULTD	F4	F0	F2	7		
2	SD	F4	0	R1	8		

	Busy	*Addr*	*Fu*
Load1	No		
Load2	Yes	72	
Load3	No		
Store1	Yes	80	Mult1
Store2	Yes	72	Mult2
Store3	No		

Reservation Stations:

Time	*Name*	*Busy*	*Op*	*Vj*	*S1 Vk*	*S2 Qj*	*RS Qk*
	Add1	No					
	Add2	No					
	Add3	No					
4	Mult1	Yes	Multd	M[80]	R(F2)		
	Mult2	Yes	Multd		R(F2)	Load2	

Code:

LD	F0	0	R1
MULTD	F4	F0	F2
SD	F4	0	R1
SUBI	R1	R1	#8
BNEZ	R1	Loop	

Register result status

Clock	**R1**		*F0*	*F2*	*F4*	*F6*	*F8*	*F10*	*F12*	...	*F30*
10	**64**	*Fu*	Load2		Mult2						

- **Load2 completing: who is waiting?**
- **Note: Dispatching BNEZ**

Loop Example Cycle 11

Instruction status:

ITER	Instruction		*j*	*k*	*Issue*	*Exec Comp*	*Write Result*
1	LD	F0	0	R1	1	9	10
1	MULTD	F4	F0	F2	2		
1	SD	F4	0	R1	3		
2	LD	F0	0	R1	6	10	11
2	MULTD	F4	F0	F2	7		
2	SD	F4	0	R1	8		

	Busy	*Addr*	*Fu*
Load1	No		
Load2	No		
Load3	Yes	64	
Store1	Yes	80	Mult1
Store2	Yes	72	Mult2
Store3	No		

Reservation Stations:

Time	*Name*	*Busy*	*Op*	*Vj*	*S1 Vk*	*S2 Qj*	*RS Qk*
	Add1	No					
	Add2	No					
	Add3	No					
3	Mult1	Yes	Multd	M[80]	R(F2)		
4	Mult2	Yes	Multd	M[72]	R(F2)		

Code:

LD	F0	0	R1
MULTD	F4	F0	F2
SD	F4	0	R1
SUBI	R1	R1	#8
BNEZ	R1	Loop	

Register result status

Clock	**R1**		*F0*	*F2*	*F4*	*F6*	*F8*	*F10*	*F12*	...	*F30*
11	**64**	*Fu*	Load3		Mult2						

- **Next load in sequence**

Loop Example Cycle 12

Instruction status:

ITER	Instruction		*j*	*k*	*Issue*	*Exec Comp*	*Write Result*
1	LD	F0	0	R1	1	9	10
1	MULTD	F4	F0	F2	2		
1	SD	F4	0	R1	3		
2	LD	F0	0	R1	6	10	11
2	MULTD	F4	F0	F2	7		
2	SD	F4	0	R1	8		

	Busy	*Addr*	*Fu*
Load1	No		
Load2	No		
Load3	Yes	64	
Store1	Yes	80	Mult1
Store2	Yes	72	Mult2
Store3	No		

Reservation Stations:

Time	*Name*	*Busy*	*Op*	*Vj*	*S1 Vk*	*S2 Qj*	*RS Qk*
	Add1	No					
	Add2	No					
	Add3	No					
2	Mult1	Yes	Multd	M[80]	R(F2)		
3	Mult2	Yes	Multd	M[72]	R(F2)		

Code:

LD	F0	0	R1
MULTD	F4	F0	F2
SD	F4	0	R1
SUBI	R1	R1	#8
BNEZ	R1	Loop	

Register result status

Clock	**R1**		*F0*	*F2*	*F4*	*F6*	*F8*	*F10*	*F12*	...	*F30*
12	**64**	*Fu*	Load3		Mult2						

- **Why not issue third multiply?**

Loop Example Cycle 13

Instruction status:

ITER	Instruction		*j*	*k*	*Issue*	*Exec Comp*	*Write Result*
1	LD	F0	0	R1	1	9	10
1	MULTD	F4	F0	F2	2		
1	SD	F4	0	R1	3		
2	LD	F0	0	R1	6	10	11
2	MULTD	F4	F0	F2	7		
2	SD	F4	0	R1	8		

	Busy	*Addr*	*Fu*
Load1	No		
Load2	No		
Load3	Yes	64	
Store1	Yes	80	Mult1
Store2	Yes	72	Mult2
Store3	No		

Reservation Stations:

Time	*Name*	*Busy*	*Op*	*Vj*	*S1 Vk*	*S2 Qj*	*RS Qk*
	Add1	No					
	Add2	No					
	Add3	No					
1	Mult1	Yes	Multd	M[80]	R(F2)		
2	Mult2	Yes	Multd	M[72]	R(F2)		

Code:

LD	F0	0	R1
MULTD	F4	F0	F2
SD	F4	0	R1
SUBI	R1	R1	#8
BNEZ	R1	Loop	

Register result status

Clock	**R1**		*F0*	*F2*	*F4*	*F6*	*F8*	*F10*	*F12*	...	*F30*
13	**64**	*Fu*	Load3		Mult2						

Loop Example Cycle 14

Instruction status:

ITER	Instruction		*j*	*k*	*Issue*	*Exec Comp*	*Write Result*
1	LD	F0	0	R1	1	9	10
1	MULTD	F4	F0	F2	2	14	
1	SD	F4	0	R1	3		
2	LD	F0	0	R1	6	10	11
2	MULTD	F4	F0	F2	7		
2	SD	F4	0	R1	8		

	Busy	*Addr*	*Fu*
Load1	No		
Load2	No		
Load3	Yes	64	
Store1	Yes	80	Mult1
Store2	Yes	72	Mult2
Store3	No		

Reservation Stations:

Time	*Name*	*Busy*	*Op*	*Vj*	*S1 Vk*	*S2 Qj*	*RS Qk*
	Add1	No					
	Add2	No					
	Add3	No					
0	Mult1	Yes	Multd	M[80]	R(F2)		
1	Mult2	Yes	Multd	M[72]	R(F2)		

Code:

LD	F0	0	R1
MULTD	F4	F0	F2
SD	F4	0	R1
SUBI	R1	R1	#8
BNEZ	R1	Loop	

Register result status

Clock	**R1**		*F0*	*F2*	*F4*	*F6*	*F8*	*F10*	*F12*	...	*F30*
14	**64**	*Fu*	Load3		Mult2						

- **Mult1 completing. Who is waiting?**

Loop Example Cycle 15

Instruction status:

ITER	Instruction		*j*	*k*	*Issue*	*Exec Comp*	*Write Result*
1	LD	F0	0	R1	1	9	10
1	MULTD	F4	F0	F2	2	14	15
1	SD	F4	0	R1	3		
2	LD	F0	0	R1	6	10	11
2	MULTD	F4	F0	F2	7	15	
2	SD	F4	0	R1	8		

	Busy	*Addr*	*Fu*
Load1	No		
Load2	No		
Load3	Yes	64	
Store1	Yes	80	[80]*R2
Store2	Yes	72	Mult2
Store3	No		

Reservation Stations:

Time	*Name*	*Busy*	*Op*	*Vj*	*S1 Vk*	*S2 Qj*	*RS Qk*
	Add1	No					
	Add2	No					
	Add3	No					
	Mult1	No					
0	Mult2	Yes	Multd	M[72]	R(F2)		

Code:

LD	F0	0	R1
MULTD	F4	F0	F2
SD	F4	0	R1
SUBI	R1	R1	#8
BNEZ	R1	Loop	

Register result status

Clock	**R1**		*F0*	*F2*	*F4*	*F6*	*F8*	*F10*	*F12*	...	*F30*
15	**64**	*Fu*	Load3		Mult2						

- **Mult2 completing. Who is waiting?**

Loop Example Cycle 16

Instruction status:

ITER	Instruction		*j*	*k*	*Issue*	*Exec Comp*	*Write Result*
1	LD	F0	0	R1	1	9	10
1	MULTD	F4	F0	F2	2	14	15
1	SD	F4	0	R1	3		
2	LD	F0	0	R1	6	10	11
2	MULTD	F4	F0	F2	7	15	16
2	SD	F4	0	R1	8		

	Busy	*Addr*	*Fu*
Load1	No		
Load2	No		
Load3	Yes	64	
Store1	Yes	80	[80]*R2
Store2	Yes	72	[72]*R2
Store3	No		

Reservation Stations:

Time	*Name*	*Busy*	*Op*	*Vj*	*S1 Vk*	*S2 Qj*	*RS Qk*
	Add1	No					
	Add2	No					
	Add3	No					
	Mult1	Yes	Multd		R(F2)	Load3	
	Mult2	No					

Code:

LD	F0	0	R1
MULTD	F4	F0	F2
SD	F4	0	R1
SUBI	R1	R1	#8
BNEZ	R1	Loop	

Register result status

Clock	**R1**		*F0*	*F2*	*F4*	*F6*	*F8*	*F10*	*F12*	*...*	*F30*
16	**64**	*Fu*	Load3		Mult1						

Loop Example Cycle 17

Instruction status:

ITER	Instruction		*j*	*k*	*Issue*	*Exec Comp*	*Write Result*
1	LD	F0	0	R1	1	9	10
1	MULTD	F4	F0	F2	2	14	15
1	SD	F4	0	R1	3		
2	LD	F0	0	R1	6	10	11
2	MULTD	F4	F0	F2	7	15	16
2	SD	F4	0	R1	8		

	Busy	*Addr*	*Fu*
Load1	No		
Load2	No		
Load3	Yes	64	
Store1	Yes	80	[80]*R2
Store2	Yes	72	[72]*R2
Store3	Yes	64	Mult1

Reservation Stations:

Time	*Name*	*Busy*	*Op*	*Vj*	*S1 Vk*	*S2 Qj*	*RS Qk*
	Add1	No					
	Add2	No					
	Add3	No					
	Mult1	Yes	Multd		R(F2)	Load3	
	Mult2	No					

Code:

LD	F0	0	R1
MULTD	F4	F0	F2
SD	F4	0	R1
SUBI	R1	R1	#8
BNEZ	R1	Loop	

Register result status

Clock	**R1**		*F0*	*F2*	*F4*	*F6*	*F8*	*F10*	*F12*	*...*	*F30*
17	**64**	*Fu*	Load3		Mult1						

Loop Example Cycle 18

Instruction status:

ITER	Instruction		*j*	*k*	*Issue*	*Exec Comp*	*Write Result*
1	LD	F0	0	R1	1	9	10
1	MULTD	F4	F0	F2	2	14	15
1	SD	F4	0	R1	3	18	
2	LD	F0	0	R1	6	10	11
2	MULTD	F4	F0	F2	7	15	16
2	SD	F4	0	R1	8		

	Busy	*Addr*	*Fu*
Load1	No		
Load2	No		
Load3	Yes	64	
Store1	Yes	80	[80]*R2
Store2	Yes	72	[72]*R2
Store3	Yes	64	Mult1

Reservation Stations:

Time	*Name*	*Busy*	*Op*	*Vj*	*S1 Vk*	*S2 Qj*	*RS Qk*
	Add1	No					
	Add2	No					
	Add3	No					
	Mult1	Yes	Multd		R(F2)	Load3	
	Mult2	No					

Code:

LD	F0	0	R1
MULTD	F4	F0	F2
SD	F4	0	R1
SUBI	R1	R1	#8
BNEZ	R1	Loop	

Register result status

Clock	**R1**		*F0*	*F2*	*F4*	*F6*	*F8*	*F10*	*F12*	*...*	*F30*
18	**64**	*Fu*	Load3		Mult1						

Loop Example Cycle 19

Instruction status:

ITER	Instruction		*j*	*k*	*Issue*	*Exec Comp*	*Write Result*
1	LD	F0	0	R1	1	9	10
1	MULTD	F4	F0	F2	2	14	15
1	SD	F4	0	R1	3	18	19
2	LD	F0	0	R1	6	10	11
2	MULTD	F4	F0	F2	7	15	16
2	SD	F4	0	R1	8	19	

	Busy	*Addr*	*Fu*
Load1	No		
Load2	No		
Load3	Yes	64	
Store1	No		
Store2	Yes	72	[72]*R2
Store3	Yes	64	Mult1

Reservation Stations:

Time	*Name*	*Busy*	*Op*	*Vj*	*S1 Vk*	*S2 Qj*	*RS Qk*
	Add1	No					
	Add2	No					
	Add3	No					
	Mult1	Yes	Multd		R(F2)	Load3	
	Mult2	No					

Code:

LD	F0	0	R1
MULTD	F4	F0	F2
SD	F4	0	R1
SUBI	R1	R1	#8
BNEZ	R1	Loop	

Register result status

Clock	**R1**		*F0*	*F2*	*F4*	*F6*	*F8*	*F10*	*F12*	*...*	*F30*
19	**64**	*Fu*	Load3		Mult1						

Loop Example Cycle 20

Instruction status:

ITER	Instruction		*j*	*k*	*Issue*	*Exec Comp*	*Write Result*
1	LD	F0	0	R1	1	9	10
1	MULTD	F4	F0	F2	2	14	15
1	SD	F4	0	R1	3	18	19
2	LD	F0	0	R1	6	10	11
2	MULTD	F4	F0	F2	7	15	16
2	SD	F4	0	R1	8	19	20

	Busy	*Addr*	*Fu*
Load1	No		
Load2	No		
Load3	Yes	64	
Store1	No		
Store2	No		
Store3	Yes	64	Mult1

Reservation Stations:

Time	*Name*	*Busy*	*Op*	*Vj*	*S1 Vk*	*S2 Qj*	*RS Qk*
	Add1	No					
	Add2	No					
	Add3	No					
	Mult1	Yes	Multd		R(F2)	Load3	
	Mult2	No					

Code:

LD	F0	0	R1
MULTD	F4	F0	F2
SD	F4	0	R1
SUBI	R1	R1	#8
BNEZ	R1	Loop	

Register result status

Clock	**R1**		*F0*	*F2*	*F4*	*F6*	*F8*	*F10*	*F12*	*...*	*F30*
20	**64**	*Fu*	Load3		Mult1						

Why can Tomasulo overlap iterations of loops?

- **Register renaming**
  - **Multiple iterations use different physical destinations for registers (dynamic loop unrolling).**
- **Reservation stations**
  - **Permit instruction issue to advance past integer control flow operations**
- **Other idea: Tomasulo building dynamic "DataFlow" graph from instructions**
  - **Fits in with readings for Wednesday**

Summary

- Scoreboard: Track dependencies through reservations
  - Simple scheme for out-of-order execution
  - WAW and WAR hazards force stalls – cannot handle multiple instructions with same destination register
- Reservations stations: *renaming* to larger set of registers + buffering source operands
  - Prevents registers as bottleneck
  - Avoids WAR, WAW hazards of Scoreboard
  - Allows loop unrolling in HW
- Dynamic hardware schemes can unroll loops dynamically in hardware
  - Form of limited dataflow
  - Register renaming is essential
- Lasting Contributions of Tomasulo Algorithm
  - Dynamic scheduling
  - Register renaming
  - Load/store disambiguation
- 360/91 descendants are Pentium II; PowerPC 604; MIPS R10000; HP-PA 8000; Alpha 21264

Explicit Register Renaming

- Tomasulo provides *Implicit Register Renaming*
  - User registers renamed to reservation station tags
- Explicit Register Renaming:
  - Use *physical* register file that is larger than number of registers specified by ISA
- Keep a translation table:
  - ISA register => physical register mapping
  - When register is written, replace table entry with new register from freelist.
  - Physical register becomes free when not being used by any instructions in progress.
- Pipeline can be exactly like "standard" DLX pipeline
  - IF, ID, EX, etc….
- Advantages:
  - Removes all WAR and WAW hazards
  - Like Tomasulo, good for allowing full out-of-order completion
  - Allows data to be fetched from a single register file
  - Makes speculative execution/precise interrupts easier:
    - » All that needs to be "undone" for precise break point is to undo the table mappings

Question: Can we use explicit register renaming with scoreboard?

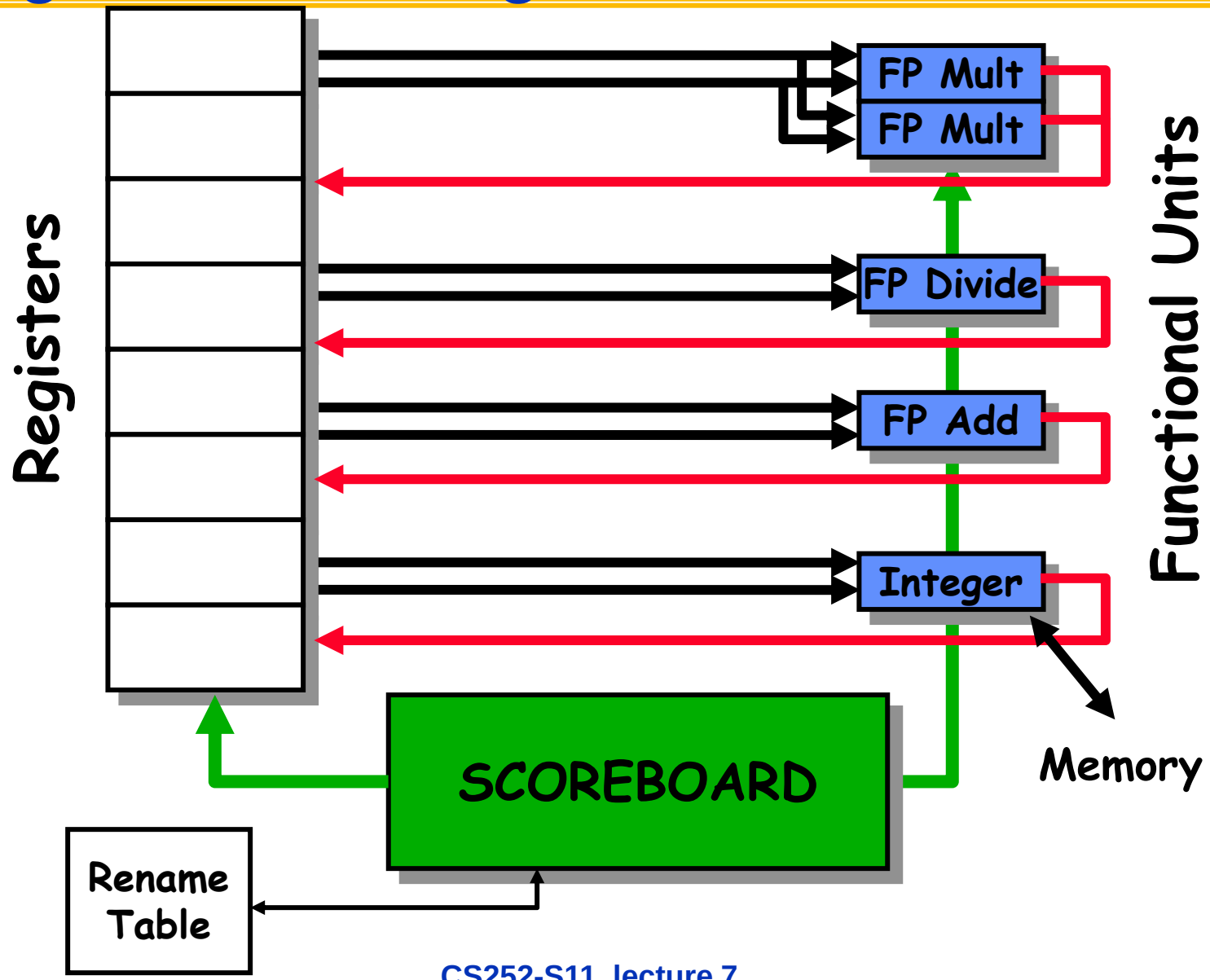

Scoreboard Example

Instruction status:

Instruction		*j*	*k*	*Issue*	*Read Oper*	*Exec Comp*	*Write Result*
LD	F6	34+	R2				
LD	F2	45+	R3				
MULTD	F0	F2	F4				
SUBD	F8	F6	F2				
DIVD	F10	F0	F6				
ADDD	F6	F8	F2				

Functional unit status:

Time Name	*Busy*	*Op*	*dest Fi*	*S1 Fj*	*S2 Fk*	*FU Qj*	*FU Qk*	*Fj? Rj*	*Fk? Rk*
Int1	No								
Int2	No								
Mult1	No								
Add	No								
Divide	No								

Register Rename and Result

Clock	*F0*	*F2*	*F4*	*F6*	*F8*	*F10*	*F12*	...	*F30*
FU	P0	P2	P4	P6	P8	P10	P12		P30

- **Initialized Rename Table**

Renamed Scoreboard 1

Instruction status:

Instruction		*j*	*k*	*Issue*	*Read Oper*	*Exec Comp*	*Write Result*
LD	F6	34+	R2	1			
LD	F2	45+	R3				
MULTD	F0	F2	F4				
SUBD	F8	F6	F2				
DIVD	F10	F0	F6				
ADDD	F6	F8	F2				

Functional unit status:

Time	*Name*	*Busy*	*Op*	*dest Fi*	*S1 Fj*	*S2 Fk*	*FU Qj*	*FU Qk*	*Fj? Rj*	*Fk? Rk*
	Int1	Yes	Load	P32		R2				Yes
	Int2	No								
	Mult1	No								
	Add	No								
	Divide	No								

Register Rename and Result

Clock		*F0*	*F2*	*F4*	*F6*	*F8*	*F10*	*F12*	...	*F30*
1	*FU*	P0	P2	P4	P32	P8	P10	P12		P30

- Each instruction allocates free register
- Similar to single-assignment compiler transformation

Renamed Scoreboard 2

Instruction status:

Instruction		*j*	*k*	*Issue*	*Read Oper*	*Exec Comp*	*Write Result*
LD	F6	34+	R2	1	2		
LD	F2	45+	R3	2			
MULTD	F0	F2	F4				
SUBD	F8	F6	F2				
DIVD	F10	F0	F6				
ADDD	F6	F8	F2				

Functional unit status:

Time	*Name*	*Busy*	*Op*	*dest Fi*	*S1 Fj*	*S2 Fk*	*FU Qj*	*FU Qk*	*Fj? Rj*	*Fk? Rk*
	Int1	Yes	Load	P32		R2				Yes
	Int2	Yes	Load	P34		R3				Yes
	Mult1	No								
	Add	No								
	Divide	No								

Register Rename and Result

Clock		*F0*	*F2*	*F4*	*F6*	*F8*	*F10*	*F12*	...	*F30*
2	*FU*	P0	P34	P4	P32	P8	P10	P12		P30

Renamed Scoreboard 3

Instruction status:

Instruction		*j*	*k*	*Issue*	*Read Oper*	*Exec Comp*	*Write Result*
LD	F6	34+	R2	1	2	3	
LD	F2	45+	R3	2	3		
MULTD	F0	F2	F4	3			
SUBD	F8	F6	F2				
DIVD	F10	F0	F6				
ADDD	F6	F8	F2				

Functional unit status:

Time	*Name*	*Busy*	*Op*	*dest Fi*	*S1 Fj*	*S2 Fk*	*FU Qj*	*FU Qk*	*Fj? Rj*	*Fk? Rk*
	Int1	Yes	Load	P32		R2				Yes
	Int2	Yes	Load	P34		R3				Yes
	Mult1	Yes	Multd	P36	P34	P4	Int2		No	Yes
	Add	No								
	Divide	No								

Register Rename and Result

Clock		*F0*	*F2*	*F4*	*F6*	*F8*	*F10*	*F12*	...	*F30*
3	*FU*	P36	P34	P4	P32	P8	P10	P12		P30

Renamed Scoreboard 4

Instruction status:

Instruction		*j*	*k*	*Issue*	*Read Oper*	*Exec Comp*	*Write Result*
LD	F6	34+	R2	1	2	3	4
LD	F2	45+	R3	2	3	4	
MULTD	F0	F2	F4	3			
SUBD	F8	F6	F2	4			
DIVD	F10	F0	F6				
ADDD	F6	F8	F2				

Functional unit status:

Time	*Name*	*Busy*	*Op*	*dest Fi*	*S1 Fj*	*S2 Fk*	*FU Qj*	*FU Qk*	*Fj? Rj*	*Fk? Rk*
	Int1	No								
	Int2	Yes	Load	P34		R3				Yes
	Mult1	Yes	Multd	P36	P34	P4	Int2		No	Yes
	Add	Yes	Sub	P38	P32	P34		Int2	Yes	No
	Divide	No								

Register Rename and Result

Clock		*F0*	*F2*	*F4*	*F6*	*F8*	*F10*	*F12*	...	*F30*
4	*FU*	P36	P34	P4	P32	P38	P10	P12		P30

Renamed Scoreboard 5

Instruction status:

Instruction		*j*	*k*	*Issue*	*Read Oper*	*Exec Comp*	*Write Result*
LD	F6	34+	R2	1	2	3	4
LD	F2	45+	R3	2	3	4	5
MULTD	F0	F2	F4	3			
SUBD	F8	F6	F2	4			
DIVD	F10	F0	F6	5			
ADDD	F6	F8	F2				

Functional unit status:

Time	*Name*	*Busy*	*Op*	*dest Fi*	*S1 Fj*	*S2 Fk*	*FU Qj*	*FU Qk*	*Fj? Rj*	*Fk? Rk*
	Int1	No								
	Int2	No								
	Mult1	Yes	Multd	P36	P34	P4			Yes	Yes
	Add	Yes	Sub	P38	P32	P34			Yes	Yes
	Divide	Yes	Divd	P40	P36	P32	Mult1		No	Yes

Register Rename and Result

Clock		*F0*	*F2*	*F4*	*F6*	*F8*	*F10*	*F12*	...	*F30*
5	*FU*	P36	P34	P4	P32	P38	P40	P12		P30

Renamed Scoreboard 6

Instruction status:

Instruction		*j*	*k*	*Issue*	*Read Oper*	*Exec Comp*	*Write Result*
LD	F6	34+	R2	1	2	3	4
LD	F2	45+	R3	2	3	4	5
MULTD	F0	F2	F4	3	6		
SUBD	F8	F6	F2	4	6		
DIVD	F10	F0	F6	5			
ADDD	F6	F8	F2				

Functional unit status:

Time	*Name*	*Busy*	*Op*	*dest Fi*	*S1 Fj*	*S2 Fk*	*FU Qj*	*FU Qk*	*Fj? Rj*	*Fk? Rk*
	Int1	No								
	Int2	No								
10	Mult1	Yes	Multd	P36	P34	P4			Yes	Yes
2	Add	Yes	Sub	P38	P32	P34			Yes	Yes
	Divide	Yes	Divd	P40	P36	P32	Mult1		No	Yes

Register Rename and Result

Clock		*F0*	*F2*	*F4*	*F6*	*F8*	*F10*	*F12*	...	*F30*
6	*FU*	P36	P34	P4	P32	P38	P40	P12		P30

Renamed Scoreboard 7

Instruction status:

Instruction		*j*	*k*	*Issue*	*Read Oper*	*Exec Comp*	*Write Result*
LD	F6	34+	R2	1	2	3	4
LD	F2	45+	R3	2	3	4	5
MULTD	F0	F2	F4	3	6		
SUBD	F8	F6	F2	4	6		
DIVD	F10	F0	F6	5			
ADDD	F6	F8	F2				

Functional unit status:

Time	*Name*	*Busy*	*Op*	*dest Fi*	*S1 Fj*	*S2 Fk*	*FU Qj*	*FU Qk*	*Fj? Rj*	*Fk? Rk*
	Int1	No								
	Int2	No								
9	Mult1	Yes	Multd	P36	P34	P4			Yes	Yes
1	Add	Yes	Sub	P38	P32	P34			Yes	Yes
	Divide	Yes	Divd	P40	P36	P32	Mult1		No	Yes

Register Rename and Result

Clock		*F0*	*F2*	*F4*	*F6*	*F8*	*F10*	*F12*	...	*F30*
7	*FU*	P36	P34	P4	P32	P38	P40	P12		P30

Renamed Scoreboard 8

Instruction status:

Instruction		*j*	*k*	*Issue*	*Read Oper*	*Exec Comp*	*Write Result*
LD	F6	34+	R2	1	2	3	4
LD	F2	45+	R3	2	3	4	5
MULTD	F0	F2	F4	3	6		
SUBD	F8	F6	F2	4	6	8	
DIVD	F10	F0	F6	5			
ADDD	F6	F8	F2				

Functional unit status:

Time	*Name*	*Busy*	*Op*	*dest Fi*	*S1 Fj*	*S2 Fk*	*FU Qj*	*FU Qk*	*Fj? Rj*	*Fk? Rk*
	Int1	No								
	Int2	No								
8	Mult1	Yes	Multd	P36	P34	P4			Yes	Yes
0	Add	Yes	Sub	P38	P32	P34			Yes	Yes
	Divide	Yes	Divd	P40	P36	P32	Mult1		No	Yes

Register Rename and Result

Clock		*F0*	*F2*	*F4*	*F6*	*F8*	*F10*	*F12*	...	*F30*
8	*FU*	P36	P34	P4	P32	P38	P40	P12		P30

Renamed Scoreboard 9

Instruction status:

Instruction		*j*	*k*	*Issue*	*Read Oper*	*Exec Comp*	*Write Result*
LD	F6	34+	R2	1	2	3	4
LD	F2	45+	R3	2	3	4	5
MULTD	F0	F2	F4	3	6		
SUBD	F8	F6	F2	4	6	8	9
DIVD	F10	F0	F6	5			
ADDD	F6	F8	F2				

Functional unit status:

Time	*Name*	*Busy*	*Op*	*dest Fi*	*S1 Fj*	*S2 Fk*	*FU Qj*	*FU Qk*	*Fj? Rj*	*Fk? Rk*
	Int1	No								
	Int2	No								
7	Mult1	Yes	Multd	P36	P34	P4			Yes	Yes
	Add	No								
	Divide	Yes	Divd	P40	P36	P32	Mult1		No	Yes

Register Rename and Result

Clock		*F0*	*F2*	*F4*	*F6*	*F8*	*F10*	*F12*	...	*F30*
9	*FU*	P36	P34	P4	P32	P38	P40	P12		P30

Renamed Scoreboard 10

Instruction status:

Instruction		*j*	*k*	*Issue*	*Read Oper*	*Exec Comp*	*Write Result*
LD	F6	34+	R2	1	2	3	4
LD	F2	45+	R3	2	3	4	5
MULTD	F0	F2	F4	3	6		
SUBD	F8	F6	F2	4	6	8	9
DIVD	F10	F0	F6	5			
ADDD	F6	F8	F2	10			

Functional unit status:

Time	*Name*	*Busy*	*Op*	*dest Fi*	*S1 Fj*	*S2 Fk*	*FU Qj*	*FU Qk*	*Fj? Rj*	*Fk? Rk*
	Int1	No								
	Int2	No								
6	Mult1	Yes	Multd	P36	P34	P4			Yes	Yes
	Add	Yes	Addd	P42	P38	P4			Yes	Yes
	Divide	Yes	Divd	P40	P36	P32	Mult1		No	Yes

WAR Hazard gone!

Register Rename and Result

Clock		*F0*	*F2*	*F4*	*F6*	*F8*	*F10*	*F12*	...	*F30*
10	*FU*	P36	P34	P4	P42	P38	P40	P12		P30

- Notice that P32 not listed in Rename Table
  - Still live. Must not be reallocated by accident

Renamed Scoreboard 11

Instruction status:

Instruction		*j*	*k*	*Issue*	*Read Oper*	*Exec Comp*	*Write Result*
LD	F6	34+	R2	1	2	3	4
LD	F2	45+	R3	2	3	4	5
MULTD	F0	F2	F4	3	6		
SUBD	F8	F6	F2	4	6	8	9
DIVD	F10	F0	F6	5			
ADDD	F6	F8	F2	10	11		

Functional unit status:

Time	*Name*	*Busy*	*Op*	*dest Fi*	*S1 Fj*	*S2 Fk*	*FU Qj*	*FU Qk*	*Fj? Rj*	*Fk? Rk*
	Int1	No								
	Int2	No								
5	Mult1	Yes	Multd	P36	P34	P4			Yes	Yes
2	Add	Yes	Addd	P42	P38	P34			Yes	Yes
	Divide	Yes	Divd	P40	P36	P32	Mult1		No	Yes

Register Rename and Result

Clock		*F0*	*F2*	*F4*	*F6*	*F8*	*F10*	*F12*	...	*F30*
11	*FU*	P36	P34	P4	P42	P38	P40	P12		P30

Renamed Scoreboard 12

Instruction status:

Instruction		*j*	*k*	*Issue*	*Read Oper*	*Exec Comp*	*Write Result*
LD	F6	34+	R2	1	2	3	4
LD	F2	45+	R3	2	3	4	5
MULTD	F0	F2	F4	3	6		
SUBD	F8	F6	F2	4	6	8	9
DIVD	F10	F0	F6	5			
ADDD	F6	F8	F2	10	11		

Functional unit status:

Time	*Name*	*Busy*	*Op*	*dest Fi*	*S1 Fj*	*S2 Fk*	*FU Qj*	*FU Qk*	*Fj? Rj*	*Fk? Rk*
	Int1	No								
	Int2	No								
4	Mult1	Yes	Multd	P36	P34	P4			Yes	Yes
1	Add	Yes	Addd	P42	P38	P34			Yes	Yes
	Divide	Yes	Divd	P40	P36	P32	Mult1		No	Yes

Register Rename and Result

Clock		*F0*	*F2*	*F4*	*F6*	*F8*	*F10*	*F12*	...	*F30*
12	*FU*	P36	P34	P4	P42	P38	P40	P12		P30

Renamed Scoreboard 13

Instruction status:

Instruction		*j*	*k*	*Issue*	*Read Oper*	*Exec Comp*	*Write Result*
LD	F6	34+	R2	1	2	3	4
LD	F2	45+	R3	2	3	4	5
MULTD	F0	F2	F4	3	6		
SUBD	F8	F6	F2	4	6	8	9
DIVD	F10	F0	F6	5			
ADDD	F6	F8	F2	10	11	13	

Functional unit status:

Time	*Name*	*Busy*	*Op*	*dest Fi*	*S1 Fj*	*S2 Fk*	*FU Qj*	*FU Qk*	*Fj? Rj*	*Fk? Rk*
	Int1	No								
	Int2	No								
3	Mult1	Yes	Multd	P36	P34	P4			Yes	Yes
0	Add	Yes	Addd	P42	P38	P34			Yes	Yes
	Divide	Yes	Divd	P40	P36	P32	Mult1		No	Yes

Register Rename and Result

Clock		*F0*	*F2*	*F4*	*F6*	*F8*	*F10*	*F12*	...	*F30*
13	*FU*	P36	P34	P4	P42	P38	P40	P12		P30

Renamed Scoreboard 14

Instruction status:

Instruction		*j*	*k*	*Issue*	*Read Oper*	*Exec Comp*	*Write Result*
LD	F6	34+	R2	1	2	3	4
LD	F2	45+	R3	2	3	4	5
MULTD	F0	F2	F4	3	6		
SUBD	F8	F6	F2	4	6	8	9
DIVD	F10	F0	F6	5			
ADDD	F6	F8	F2	10	11	13	14

Functional unit status:

Time	*Name*	*Busy*	*Op*	*dest Fi*	*S1 Fj*	*S2 Fk*	*FU Qj*	*FU Qk*	*Fj? Rj*	*Fk? Rk*
	Int1	No								
	Int2	No								
2	Mult1	Yes	Multd	P36	P34	P4			Yes	Yes
	Add	No								
	Divide	Yes	Divd	P40	P36	P32	Mult1		No	Yes

Register Rename and Result

Clock		*F0*	*F2*	*F4*	*F6*	*F8*	*F10*	*F12*	...	*F30*
14	*FU*	P36	P34	P4	P42	P38	P40	P12		P30

Renamed Scoreboard 15

Instruction status:

Instruction		*j*	*k*	*Issue*	*Read Oper*	*Exec Comp*	*Write Result*
LD	F6	34+	R2	1	2	3	4
LD	F2	45+	R3	2	3	4	5
MULTD	F0	F2	F4	3	6		
SUBD	F8	F6	F2	4	6	8	9
DIVD	F10	F0	F6	5			
ADDD	F6	F8	F2	10	11	13	14

Functional unit status:

Time	*Name*	*Busy*	*Op*	*dest Fi*	*S1 Fj*	*S2 Fk*	*FU Qj*	*FU Qk*	*Fj? Rj*	*Fk? Rk*
	Int1	No								
	Int2	No								
1	Mult1	Yes	Multd	P36	P34	P4			Yes	Yes
	Add	No								
	Divide	Yes	Divd	P40	P36	P32	Mult1		No	Yes

Register Rename and Result

Clock		*F0*	*F2*	*F4*	*F6*	*F8*	*F10*	*F12*	...	*F30*
15	*FU*	P36	P34	P4	P42	P38	P40	P12		P30

Renamed Scoreboard 16

Instruction status:

Instruction		*j*	*k*	*Issue*	*Read Oper*	*Exec Comp*	*Write Result*
LD	F6	34+	R2	1	2	3	4
LD	F2	45+	R3	2	3	4	5
MULTD	F0	F2	F4	3	6	16	
SUBD	F8	F6	F2	4	6	8	9
DIVD	F10	F0	F6	5			
ADDD	F6	F8	F2	10	11	13	14

Functional unit status:

Time	*Name*	*Busy*	*Op*	*dest Fi*	*S1 Fj*	*S2 Fk*	*FU Qj*	*FU Qk*	*Fj? Rj*	*Fk? Rk*
	Int1	No								
	Int2	No								
0	Mult1	Yes	Multd	P36	P34	P4			Yes	Yes
	Add	No								
	Divide	Yes	Divd	P40	P36	P32	Mult1		No	Yes

Register Rename and Result

Clock		*F0*	*F2*	*F4*	*F6*	*F8*	*F10*	*F12*	...	*F30*
16	*FU*	P36	P34	P4	P42	P38	P40	P12		P30

Renamed Scoreboard 17

Instruction status:

Instruction		*j*	*k*	*Issue*	*Read Oper*	*Exec Comp*	*Write Result*
LD	F6	34+	R2	1	2	3	4
LD	F2	45+	R3	2	3	4	5
MULTD	F0	F2	F4	3	6	16	17
SUBD	F8	F6	F2	4	6	8	9
DIVD	F10	F0	F6	5			
ADDD	F6	F8	F2	10	11	13	14

Functional unit status:

Time	*Name*	*Busy*	*Op*	*dest Fi*	*S1 Fj*	*S2 Fk*	*FU Qj*	*FU Qk*	*Fj? Rj*	*Fk? Rk*
	Int1	No								
	Int2	No								
	Mult1	No								
	Add	No								
	Divide	Yes	Divd	P40	P36	P32	Mult1		Yes	Yes

Register Rename and Result

Clock		*F0*	*F2*	*F4*	*F6*	*F8*	*F10*	*F12*	...	*F30*
17	*FU*	P36	P34	P4	P42	P38	P40	P12		P30

Renamed Scoreboard 18

Instruction status:

Instruction		*j*	*k*	*Issue*	*Read Oper*	*Exec Comp*	*Write Result*
LD	F6	34+	R2	1	2	3	4
LD	F2	45+	R3	2	3	4	5
MULTD	F0	F2	F4	3	6	16	17
SUBD	F8	F6	F2	4	6	8	9
DIVD	F10	F0	F6	5	18		
ADDD	F6	F8	F2	10	11	13	14

Functional unit status:

Time	*Name*	*Busy*	*Op*	*dest Fi*	*S1 Fj*	*S2 Fk*	*FU Qj*	*FU Qk*	*Fj? Rj*	*Fk? Rk*
	Int1	No								
	Int2	No								
	Mult1	No								
	Add	No								
40	Divide	Yes	Divd	P40	P36	P32	Mult1		Yes	Yes

Register Rename and Result

Clock		*F0*	*F2*	*F4*	*F6*	*F8*	*F10*	*F12*	...	*F30*
18	*FU*	P36	P34	P4	P42	P38	P40	P12		P30

Explicit Renaming Support Includes:

- **Rapid access to a table of translations**
- **A physical register file that has more registers than specified by the ISA**
- **Ability to figure out which physical registers are free.**
  - **No free registers ⇒ stall on issue**
- **Thus, register renaming doesn't require reservation stations. However:**
  - **Many modern architectures use explicit register renaming + Tomasulo-like reservation stations to control execution.**

How many instructions can be in the pipeline?

Which features of an ISA limit the number of instructions in the pipeline?

Number of Registers

Which features of a program limit the number of instructions in the pipeline?

Control transfers

Out-of-order dispatch by itself does not provide any significant performance improvement !

How important is renaming? Consider execution without it

					latency
1	LD	F2,	34(R2)		*1*
2	LD	F4,	45(R3)		*long*
3	MULTD	F6,	F4,	F2	*3*
4	SUBD	F8,	F2,	F2	*1*
5	DIVD	F4,	F2,	F8	*4*
6	ADDD	F10,	F6,	F4	*1*

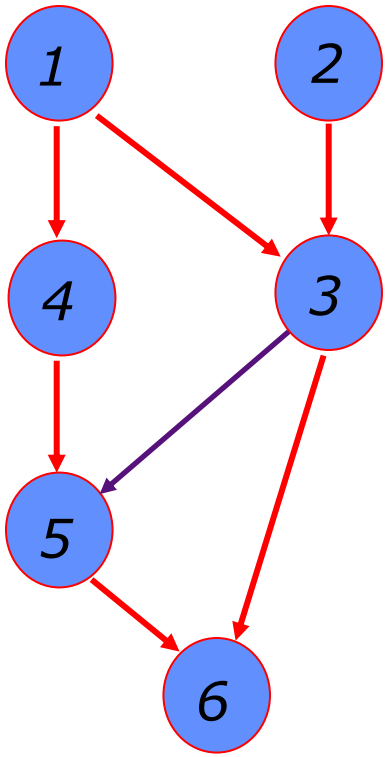

In-order: 1 (2,1) . . . . . 2 3 4 4 3 5 . . . 5 6 6

Out-of-order: 1 (2,1) 4 4 . . . . 2 3 . . 3 5 . . . 5 6 6

Out-of-order execution did not allow any significant improvement!

Little's Law

Throughput (T) = Number in Flight (N) / Latency (L)

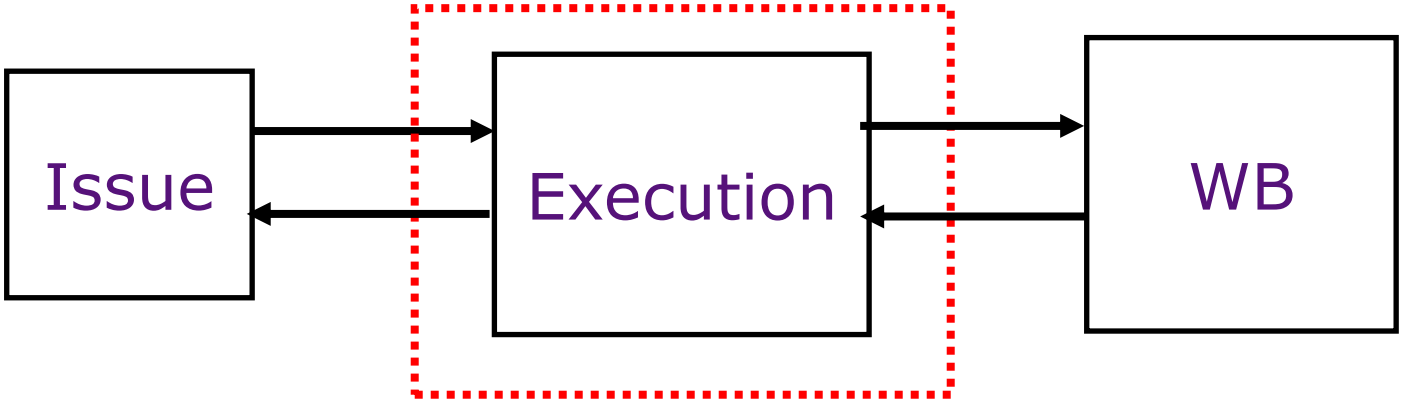

Example:

- *4 floating point registers*
- *8 cycles per floating point operation*

⇒ maximum of ½ issue per cycle without renaming!

Instruction-level Parallelism via *Renaming*

					latency
1	LD	F2,	34(R2)		*1*
2	LD	F4,	45(R3)		*long*
3	MULTD	F6,	F4,	F2	*3*
4	SUBD	F8,	F2,	F2	*1*
5	DIVD	F4′,	F2,	F8	*4*
6	ADDD	F10,	F6,	F4′	*1*

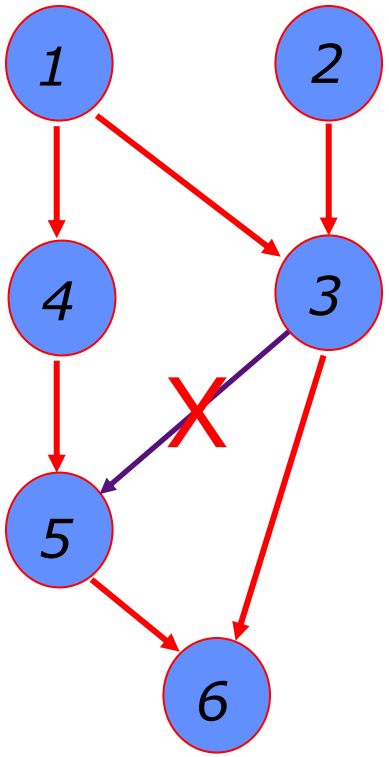

In-order: 1 (2,1) . . . . . 2 3 4 4 3 5 . . . 5 6 6
Out-of-order: 1 (2,1) 4 4 5 . . . 2 (3,5) 3 6 6

Any antidependence can be eliminated by renaming.
(renaming ⇒ additional storage)
Can be done either in Software or Hardware

Data-Flow Architectures

- **Basic Idea: Hardware respresents direct encoding of compiler dataflow graphs:**

```
Input: a,b
    y:= (a+b)/x
    x:= (a*(a+b))+b
output: y,x
```

- **Data flows along arcs in "Tokens".**
- **When two tokens arrive at compute box, box "fires" and produces new token.**
- **Split operations produce copies of tokens**

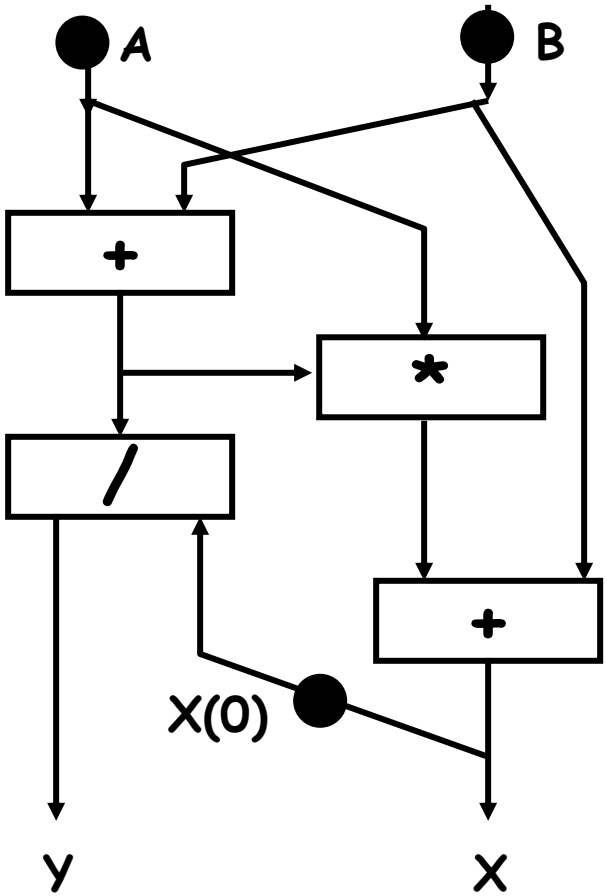

Paper by Dennis and Misunas

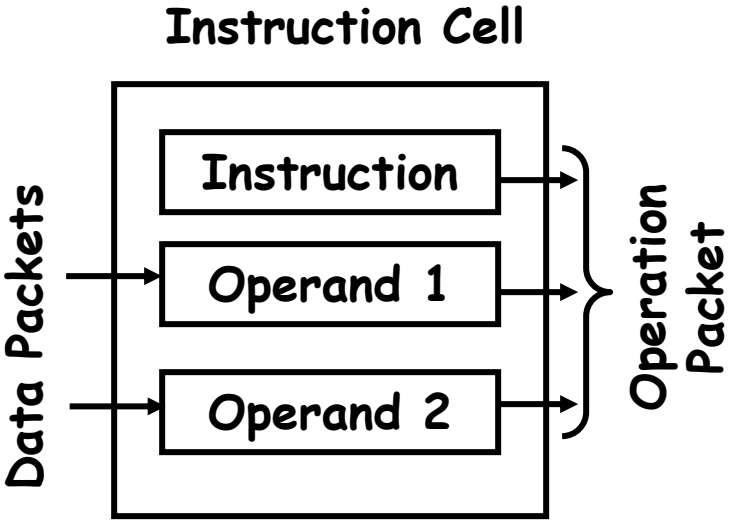

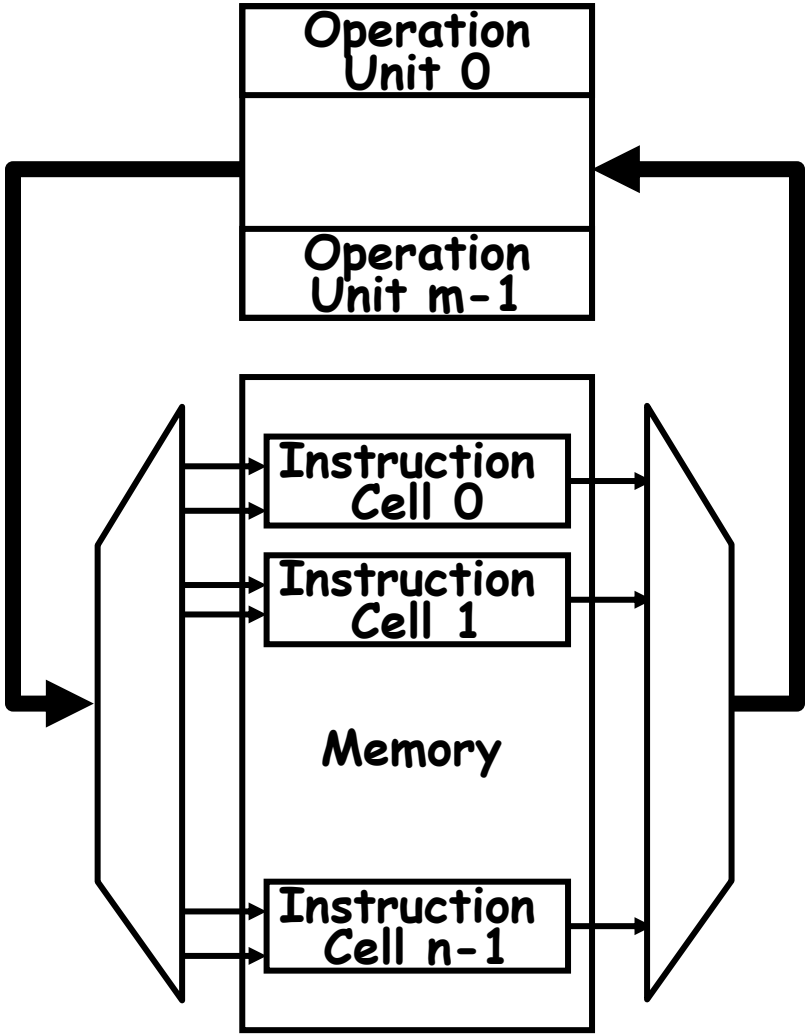

"Reservation Station?"

What about Precise Exceptions/Interrupts?

- **Both Scoreboard and Tomasulo have:**
  - ***In-order issue, out-of-order execution, out-of-order completion***
- **Recall: An interrupt or exception is *precise* if there is a single instruction for which:**
  - **All instructions before that have committed their state**
  - **No following instructions (including the interrupting instruction) have modified any state.**

- **Need way to resynchronize execution with instruction stream (I.e. with issue-order)**
  - **Easiest way is with *in-order completion (i.e. reorder buffer)***
  - **Other Techniques (Smith paper): Future File, History Buffer**

Exception Handling
(In-Order Five-Stage Pipeline)

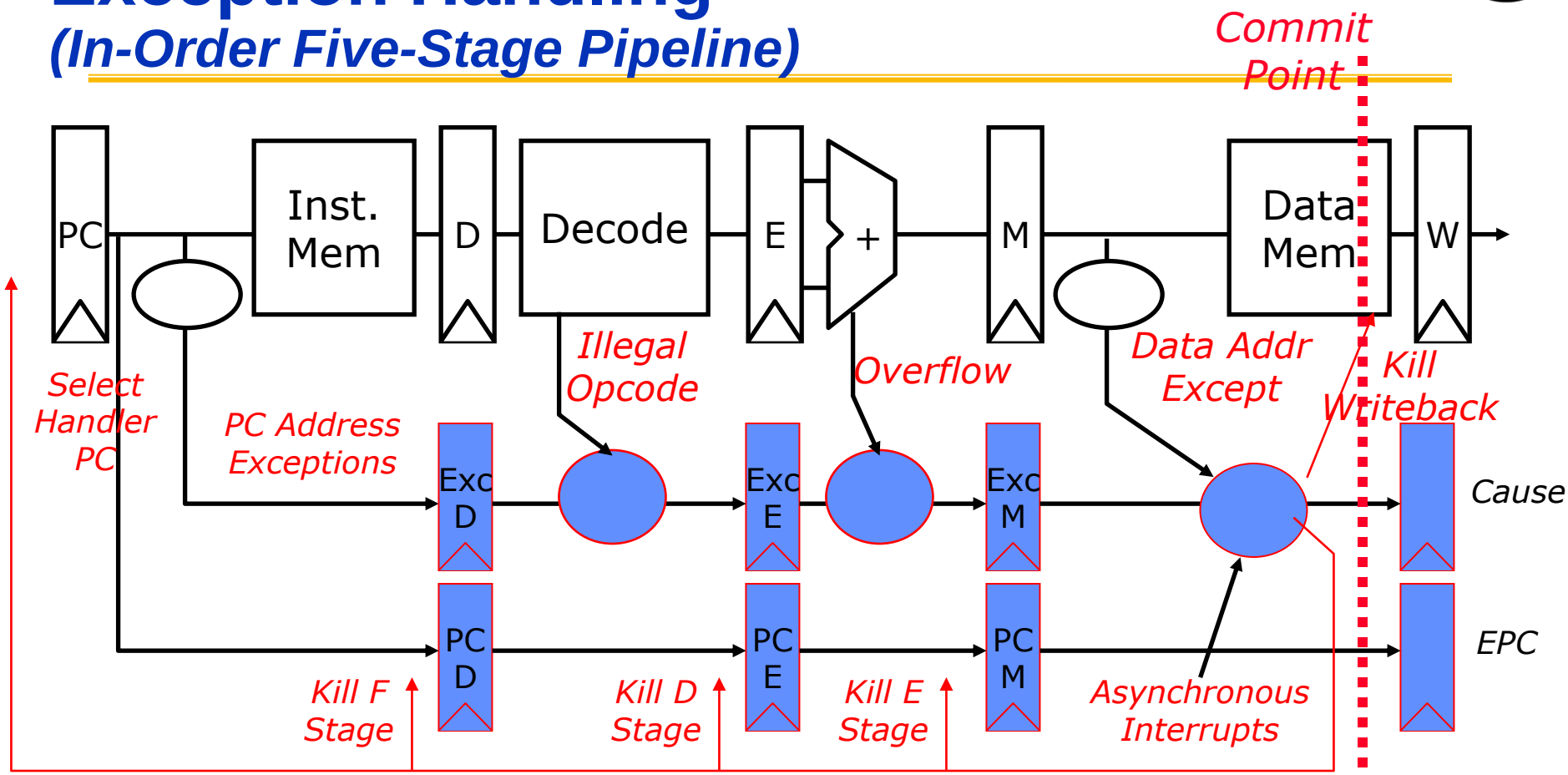

- Hold exception flags in pipeline until commit point (M stage)
- Exceptions in earlier pipe stages override later exceptions
- Inject external interrupts at commit point (override others)
- If exception at commit: update Cause and EPC registers, kill all stages, inject handler PC into fetch stage

Complex In-Order Pipeline: Precise Exceptions

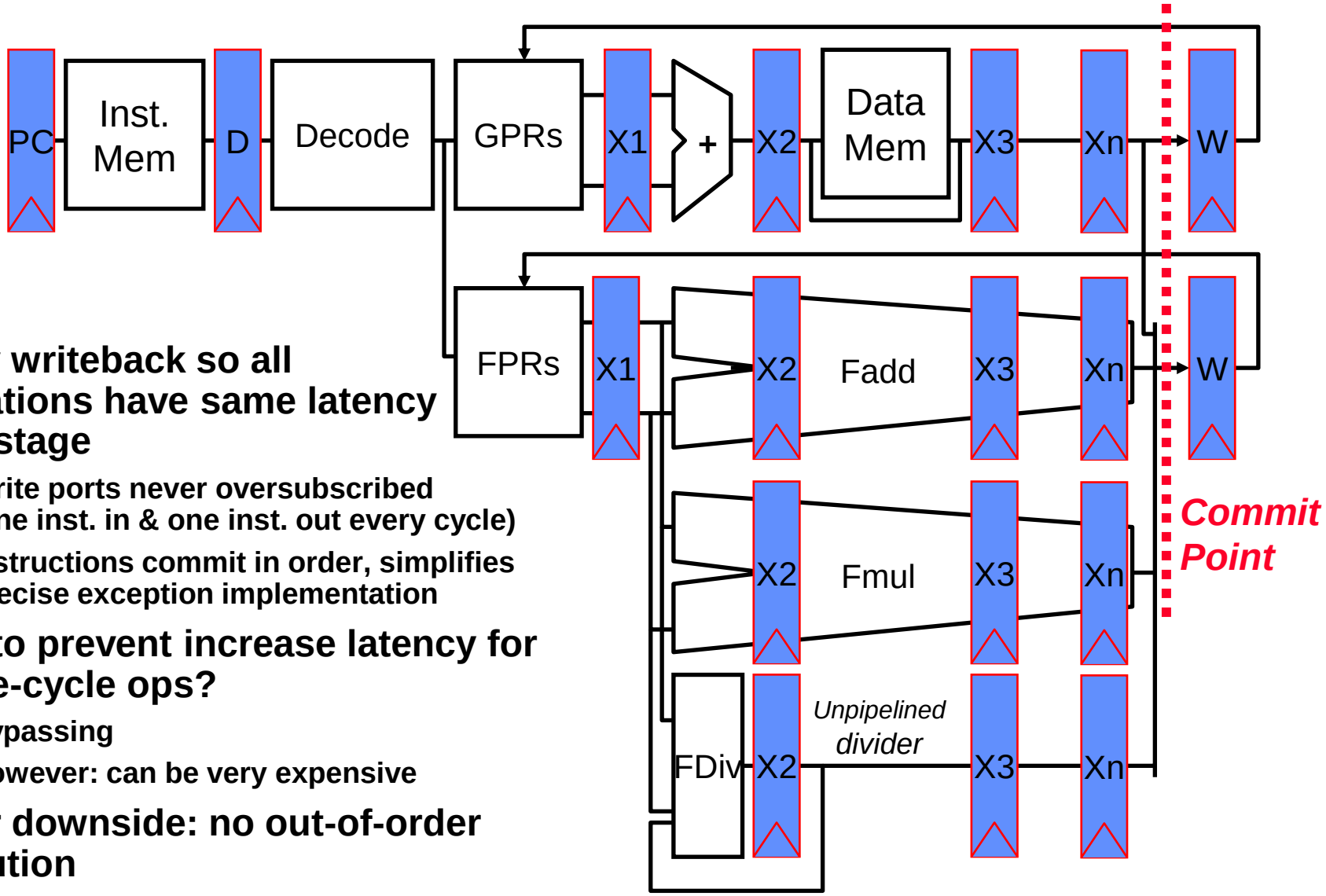

- **Delay writeback so all operations have same latency to W stage**
  - **Write ports never oversubscribed (one inst. in & one inst. out every cycle)**
  - **Instructions commit in order, simplifies precise exception implementation**
- **How to prevent increase latency for single-cycle ops?**
  - **Bypassing**
  - **However: can be very expensive**
- **Other downside: no out-of-order execution**

In-Order Commit for Precise Exceptions

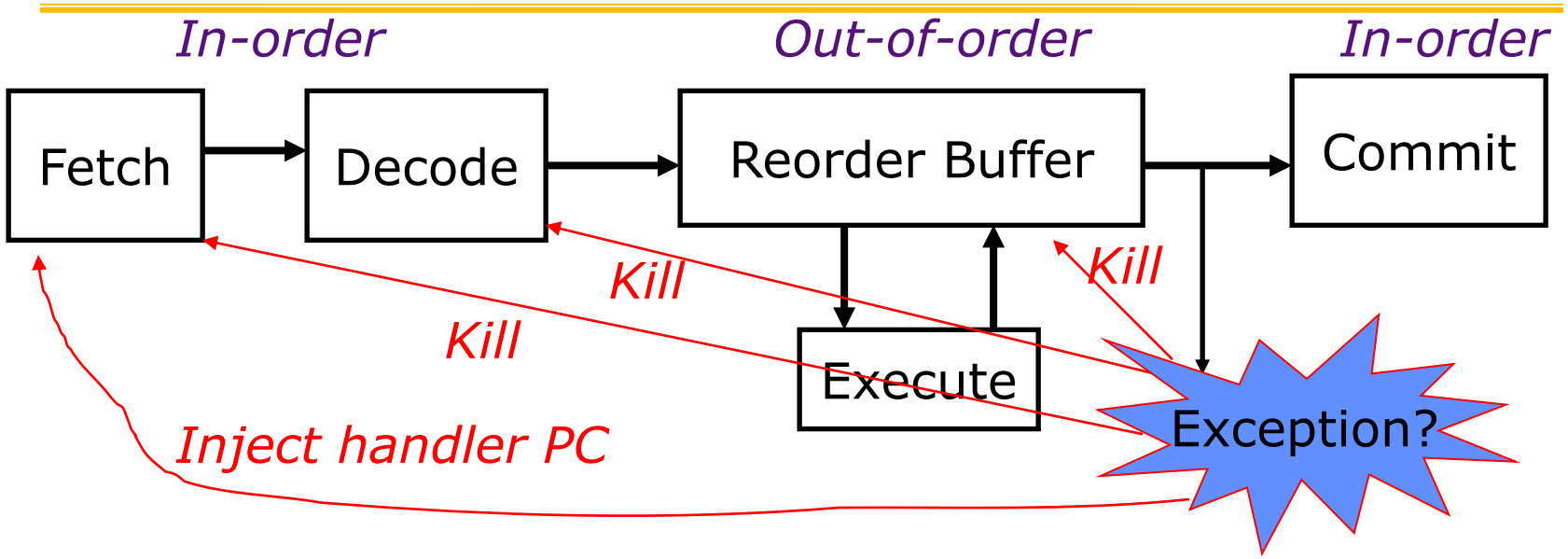

- Instructions fetched and decoded into instruction reorder buffer in-order
- Execution is out-of-order (⇒ out-of-order completion)
- *Commit* (write-back to architectural state, i.e., regfile & memory) is in-order

Temporary storage needed to hold results before commit (shadow registers and store buffers)

In-Order versus Out-of-Order Phases

- Instruction fetch/decode/rename always in-order
  - Need to parse ISA sequentially to get correct semantics
  - *CS252:Proposals for speculative OoO instruction fetch, e.g., Multiscalar. Predict control flow and data dependencies across sequential program segments fetched/decoded/executed in parallel, fixup if prediction wrong*
- Dispatch (place instruction into machine buffers to wait for issue) also always in-order
  - Some use “Dispatch” to mean “Issue”, but not in these lectures

In-Order Versus Out-of-Order Issue

- In-order (InO) issue:
  - Issue stalls on RAW dependencies or structural hazards, or possibly WAR/WAW hazards
  - Instruction cannot issue to execution units unless all preceding instructions have issued to execution units
- Out-of-order (OoO) issue:
  - Instructions dispatched in program order to *reservation stations (or other forms of instruction buffer)* to wait for operands to arrive, or other hazards to clear
  - While earlier instructions wait in issue buffers, following instructions can be dispatched and issued out-of-order

In-Order versus Out-of-Order Completion

- All but simplest machines have out-of-order completion, due to different latencies of functional units and desire to bypass values as soon as available
- Classic RISC 5-stage integer pipeline just barely has in-order completion
  - Load takes two cycles, but following one-cycle integer op completes at same time, not earlier
  - Adding pipelined FPU immediately brings OoO completion

In-Order versus Out-of-Order Commit

- In-order commit supports precise traps, standard today
  - *CS252: Some proposals to reduce the cost of in-order commit by retiring some instructions early to compact reorder buffer, but this is just an optimized in-order commit*
- Out-of-order commit was effectively what early OoO machines implemented (imprecise traps) as completion irrevocably changed machine state
  - i.e., complete == commit in these machines

OoO Design Choices

- Where are reservation stations?
  - Part of reorder buffer, or in separate issue window?
  - Distributed by functional units, or centralized?
- How is register renaming performed?
  - Tags and data held in reservation stations, with separate architectural register file
  - Tags only in reservation stations, data held in unified physical register file

What are the hardware complexities with reorder buffer (ROB)?

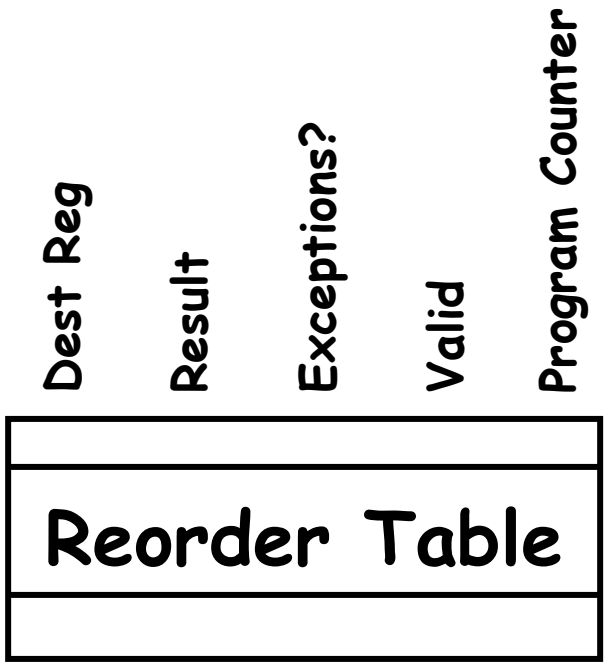

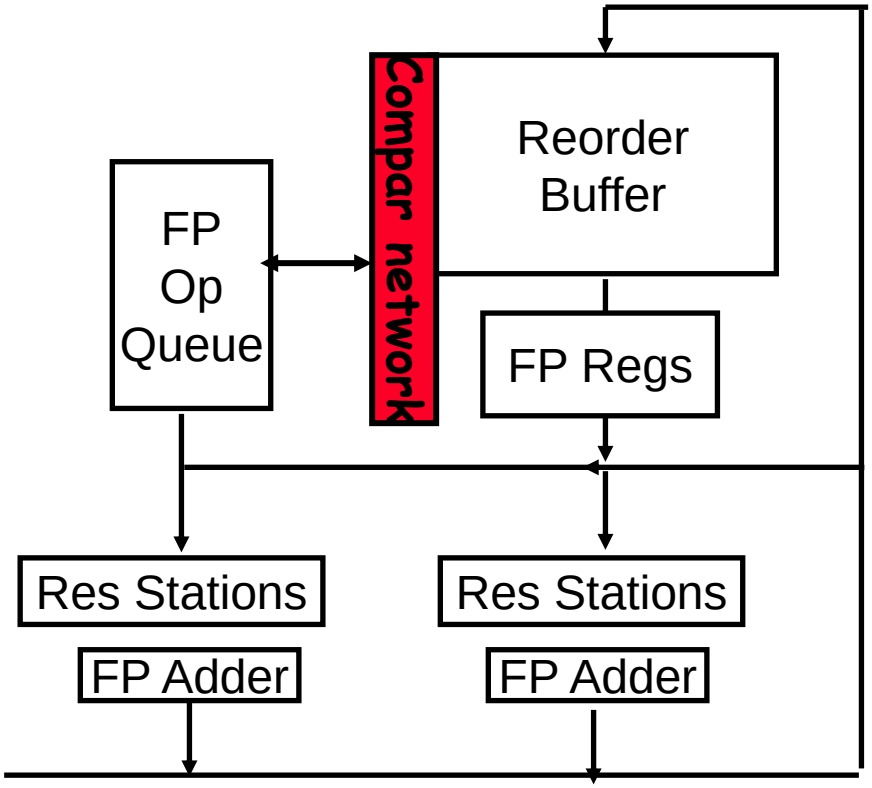

- **How do you find the latest version of a register?**
  - **As specified by Smith paper, need associative comparison network**
  - **Could use future file or just use the register result status buffer to track which specific reorder buffer has received the value**
- **Need as many ports on ROB as register file**

Four Steps of *Speculative* Tomasulo

1. **Issue—get instruction from FP Op Queue**

   If reservation station and reorder buffer slot free, issue instr & send operands & reorder buffer no. for destination (this stage sometimes called "dispatch")

2. **Execution—operate on operands (EX)**

   When both operands ready then execute; if not ready, watch CDB for result; when both in reservation station, execute; checks RAW (sometimes called "issue")

3. **Write result—finish execution (WB)**

   Write on Common Data Bus to all awaiting FUs & reorder buffer; mark reservation station available.

4. **Commit—update register with reorder result**

   When instr. at head of reorder buffer & result present, update register with result (or store to memory) and remove instr from reorder buffer. Mispredicted branch flushes reorder buffer (sometimes called "graduation")

Tomasulo With Reorder buffer:

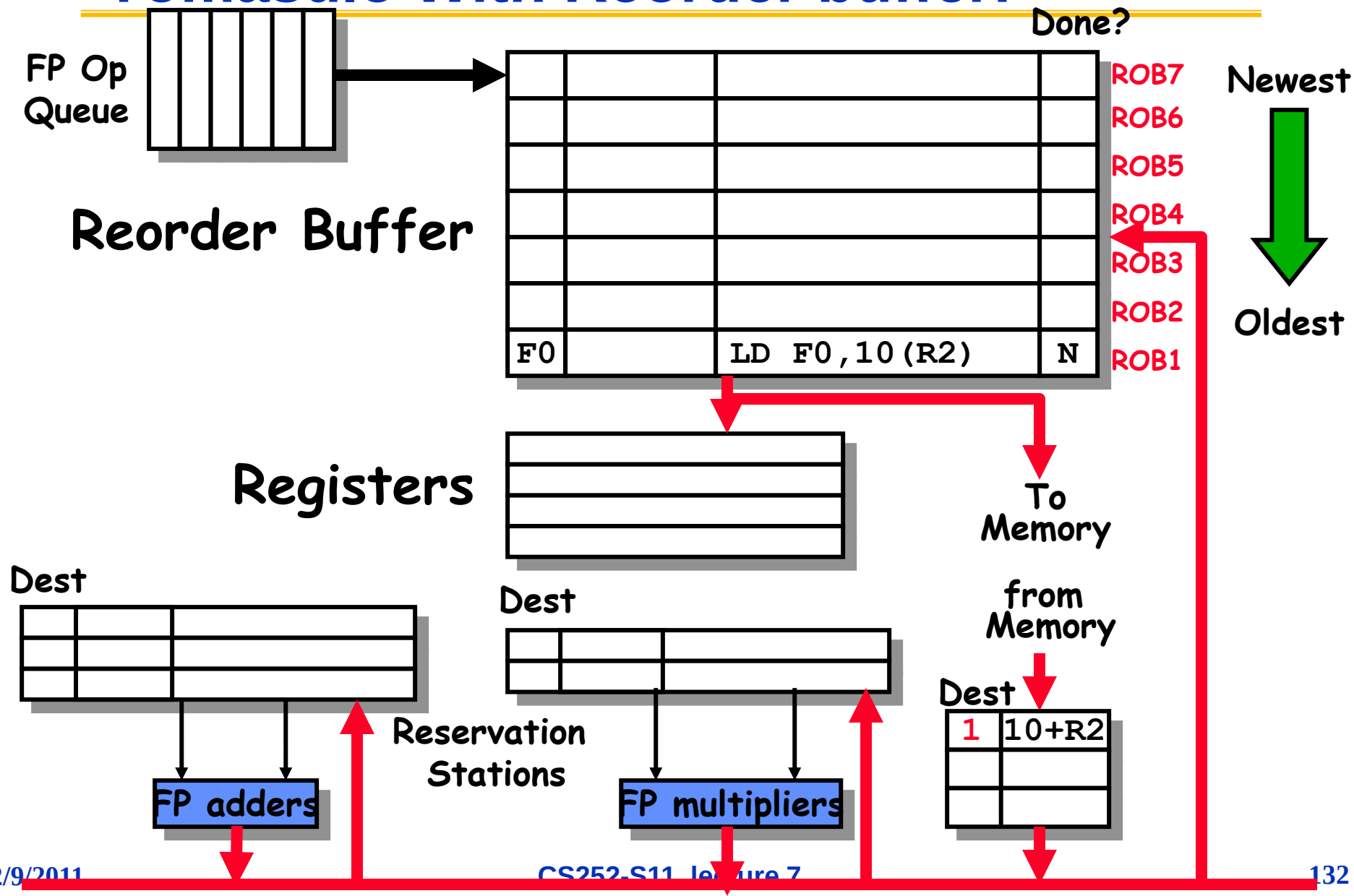

Tomasulo With Reorder buffer:

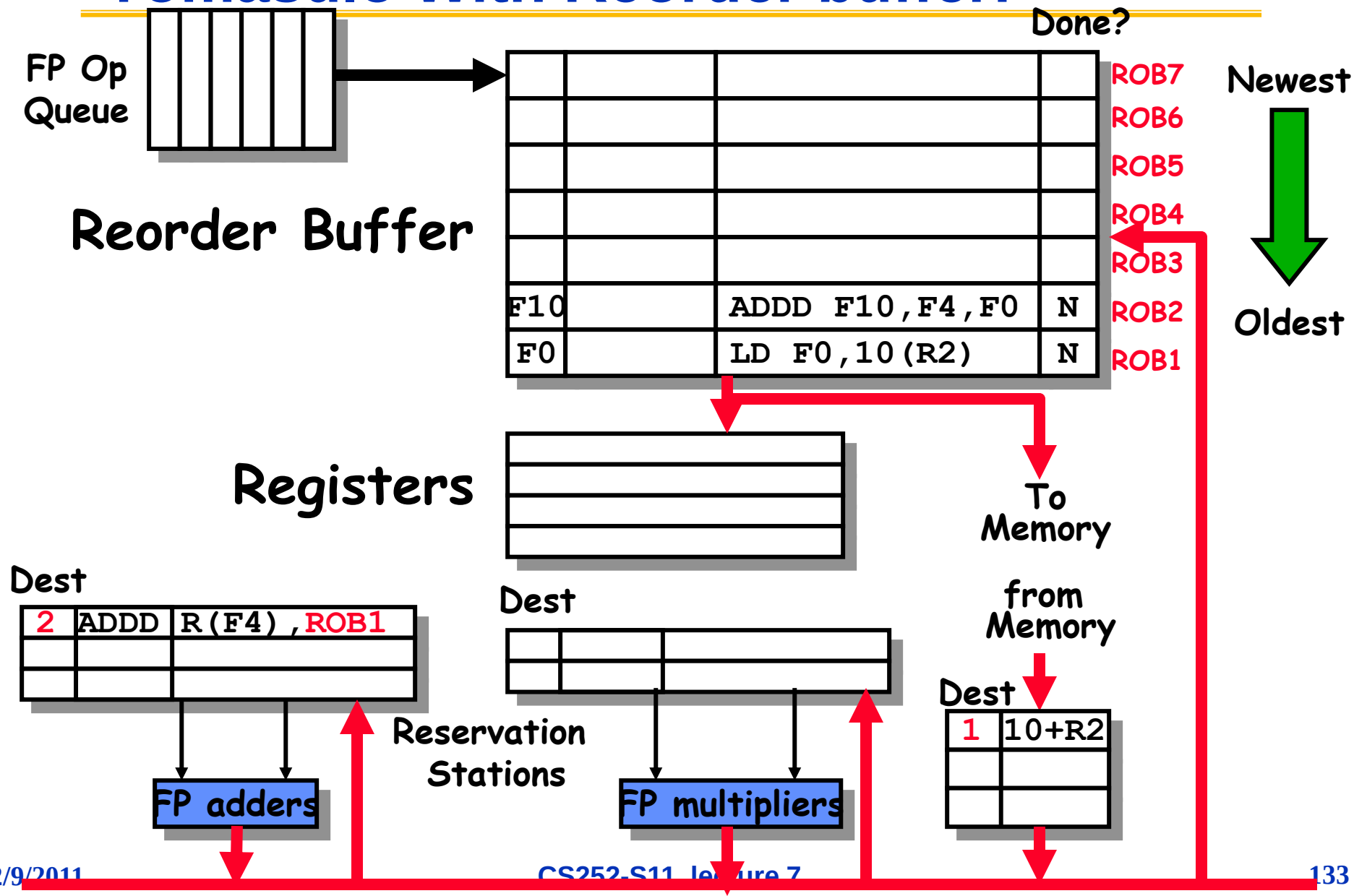

Tomasulo With Reorder buffer:

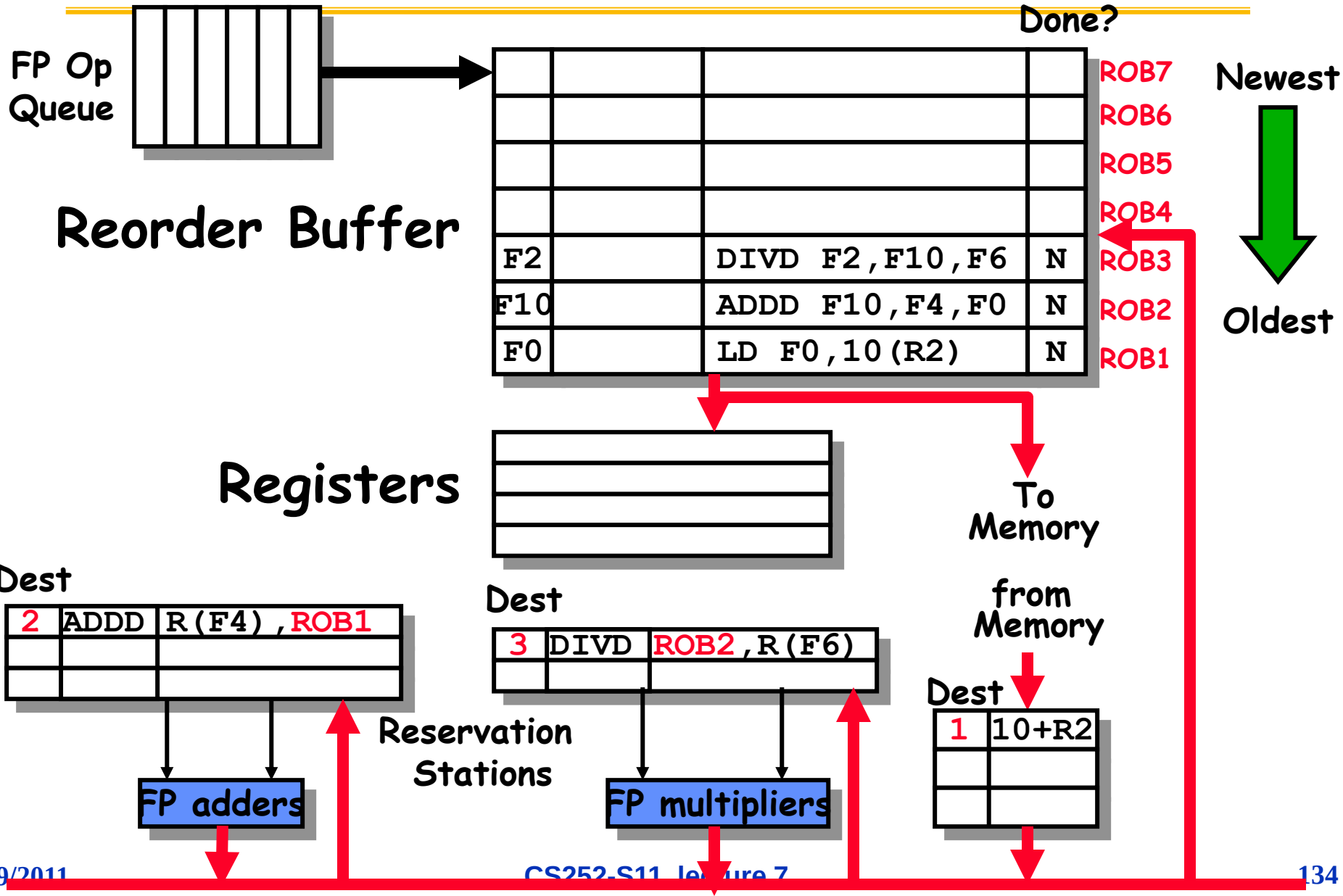

Tomasulo With Reorder buffer:

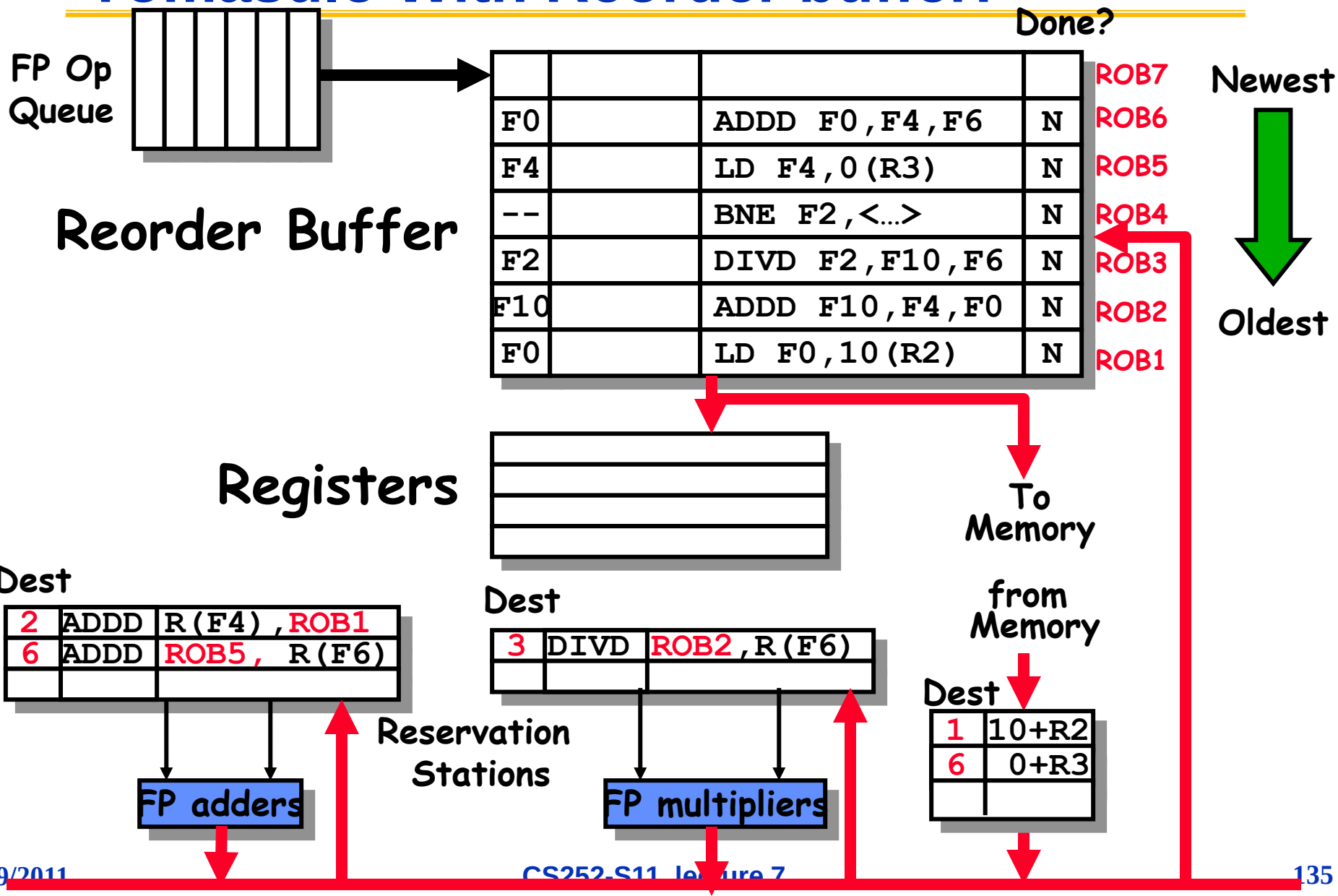

Tomasulo With Reorder buffer:

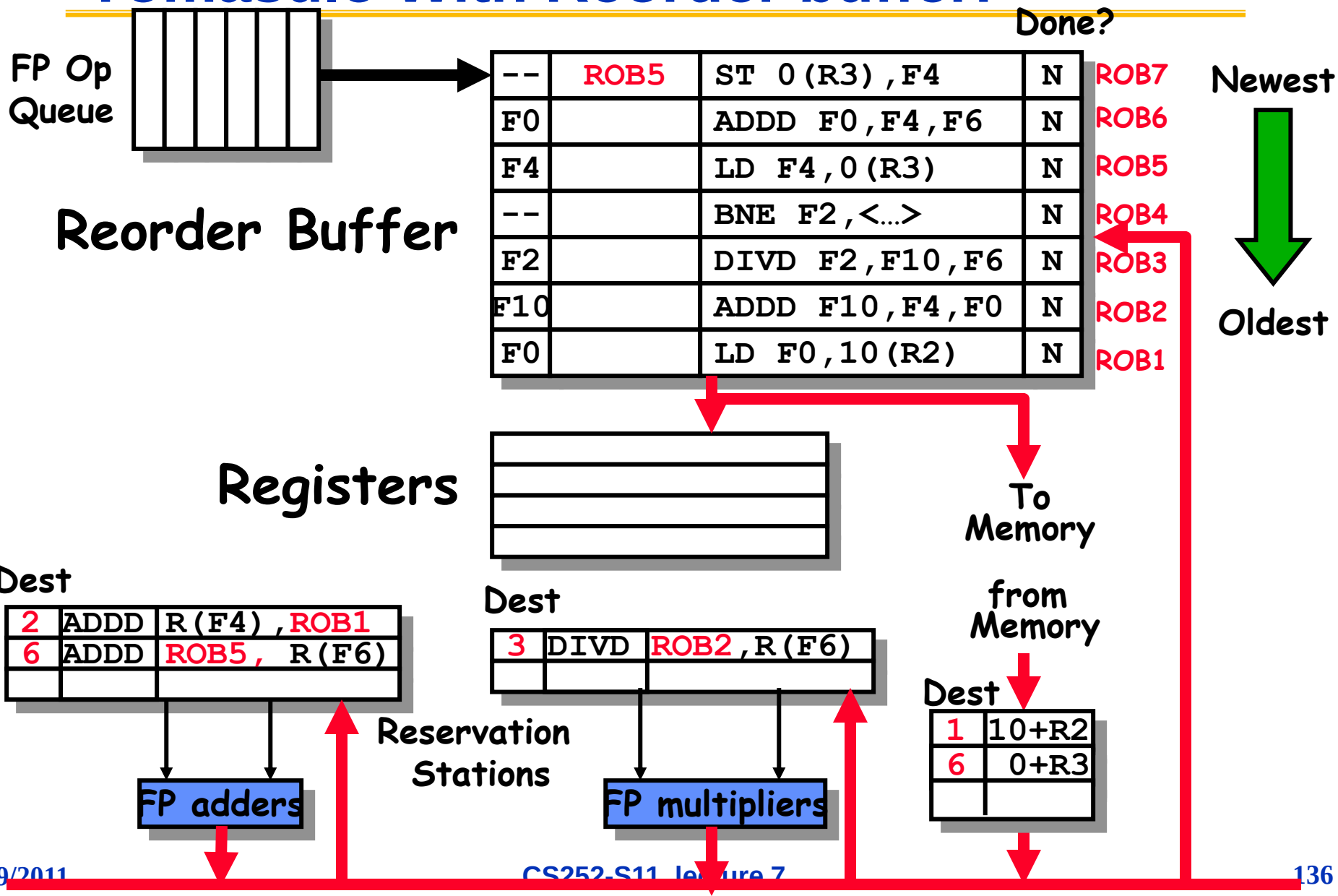

Tomasulo With Reorder buffer:

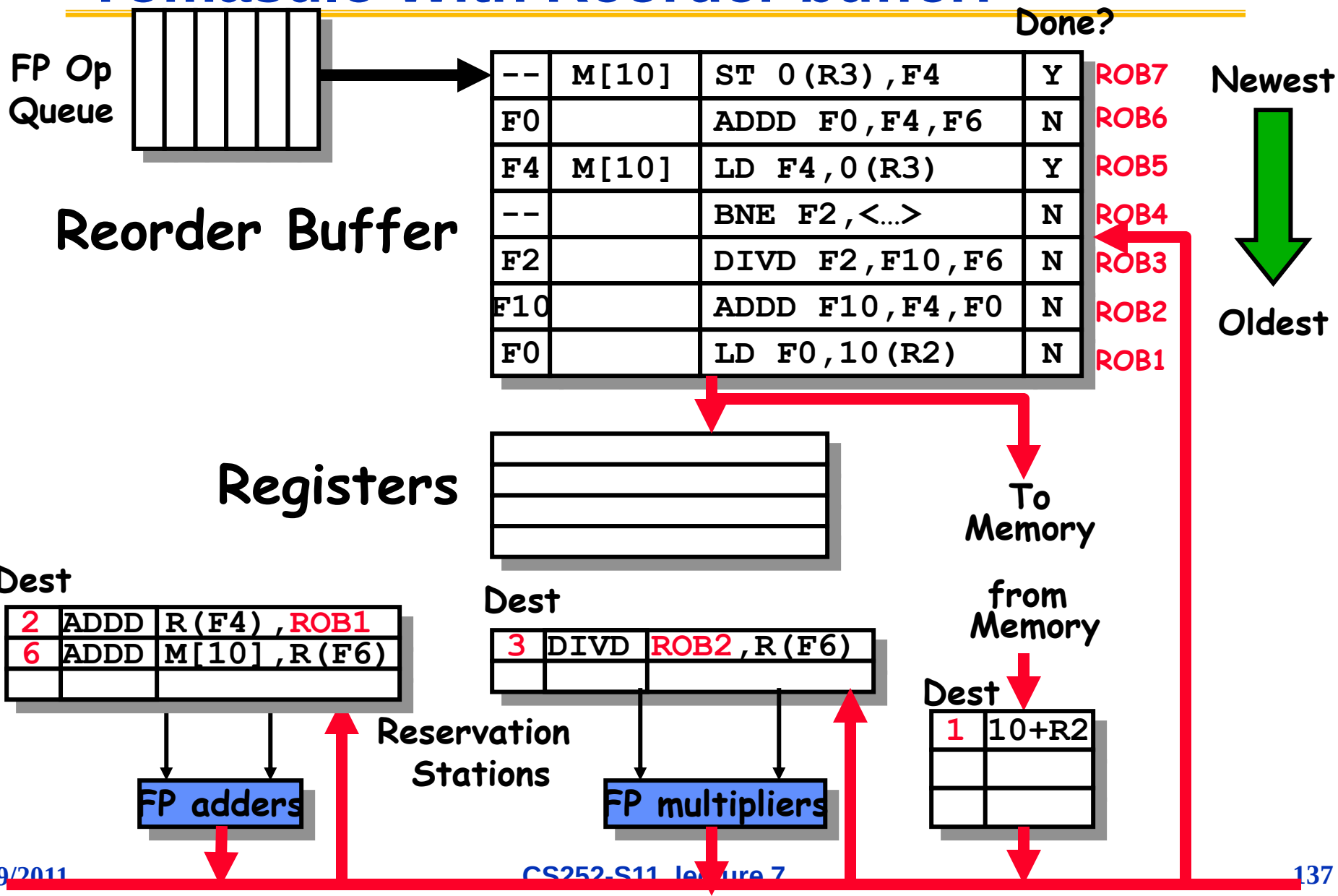

Tomasulo With Reorder buffer:

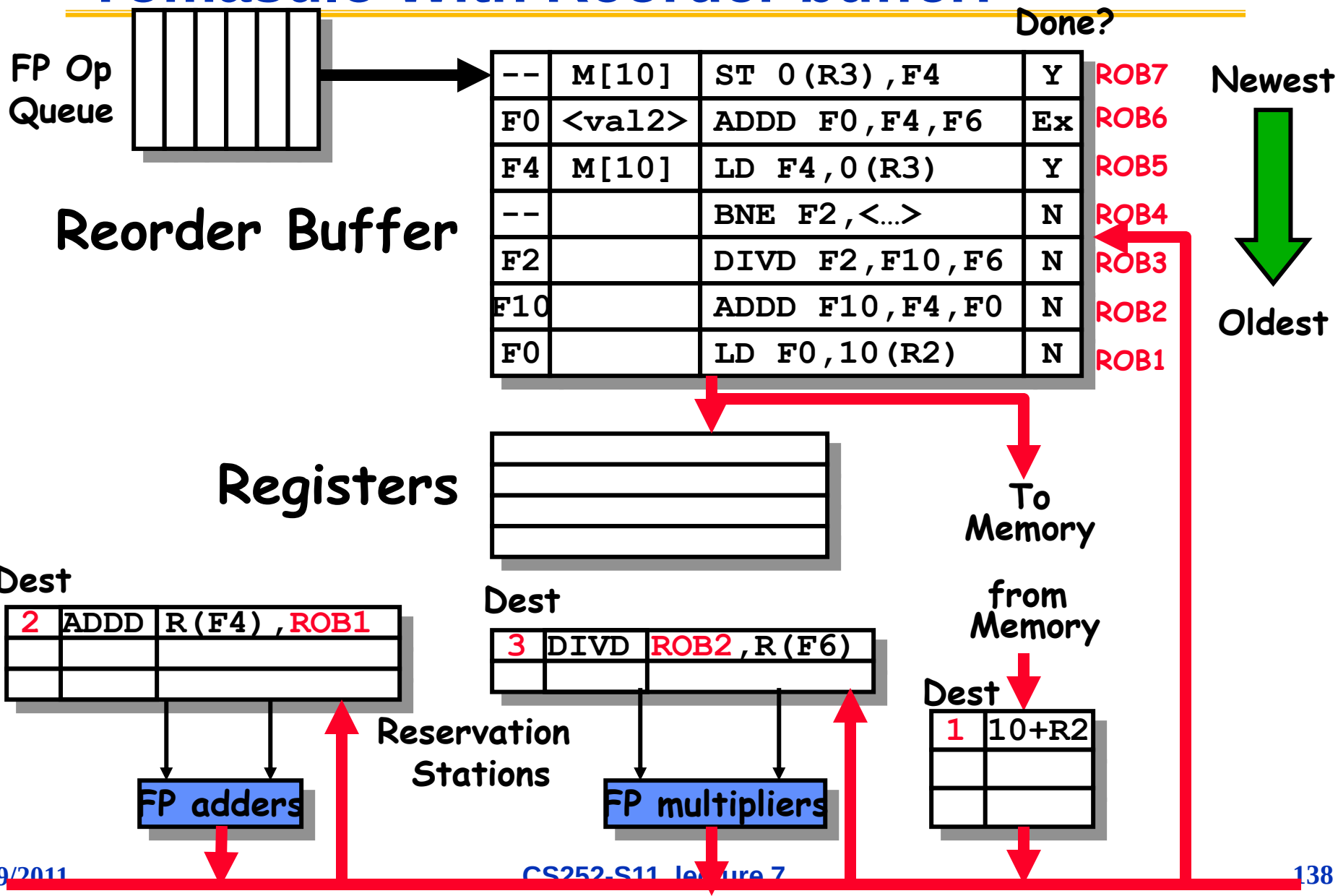

Tomasulo With Reorder buffer:

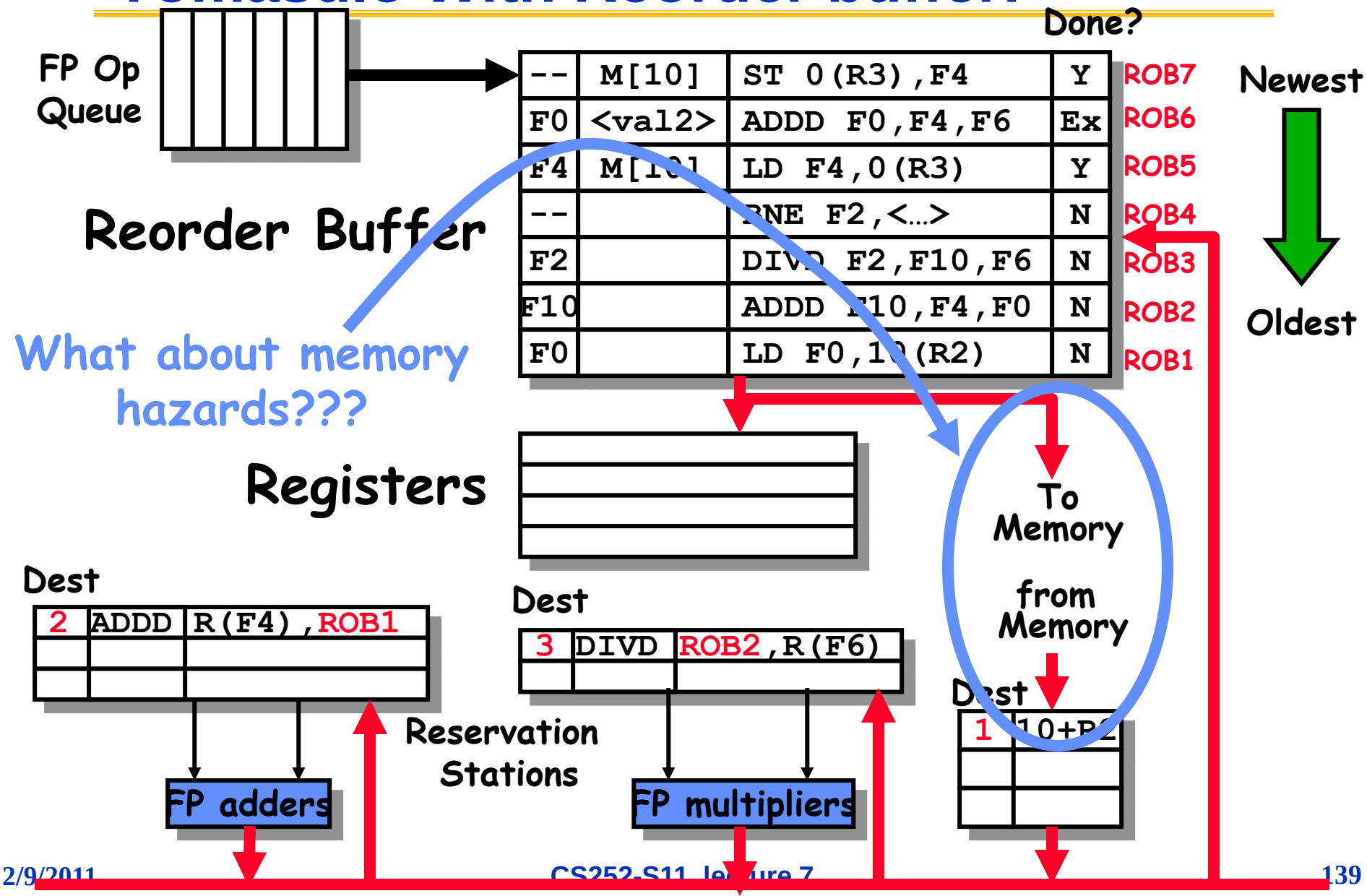

Memory Disambiguation: Sorting out RAW Hazards in memory

- **Question: Given a load that follows a store in program order, are the two related?**
  - **(Alternatively: is there a RAW hazard between the store and the load)?**

Eg:

```
st    0(R2),R5
ld    R6,0(R3)
```

- **Can we go ahead and start the load early?**
  - **Store address could be delayed for a long time by some calculation that leads to R2 (divide?).**
  - **We might want to issue/begin execution of both operations in same cycle.**
  - **Today: Answer is that we are not allowed to start load until we know that address 0(R2) ≠ 0(R3)**
  - **Next Week: We might guess at whether or not they are dependent (called "dependence speculation") and use reorder buffer to fixup if we are wrong.**

Hardware Support for Memory Disambiguation

- **Need buffer to keep track of all outstanding stores to memory, in program order.**
  - **Keep track of address (when becomes available) and value (when becomes available)**
  - **FIFO ordering: will retire stores from this buffer in program order**
- **When issuing a load, record current head of store queue (know which stores are ahead of you).**
- **When have address for load, check store queue:**
  - **If *any* store prior to load is waiting for its address, stall load.**
  - **If load address matches earlier store address (associative lookup), then we have a *memory-induced RAW hazard*:**
    - » **store value available ⇒ return value**
    - » **store value not available ⇒ return ROB number of source**
  - **Otherwise, send out request to memory**
- **Actual stores commit in order, so no worry about WAR/WAW hazards through memory.**

Memory Disambiguation:

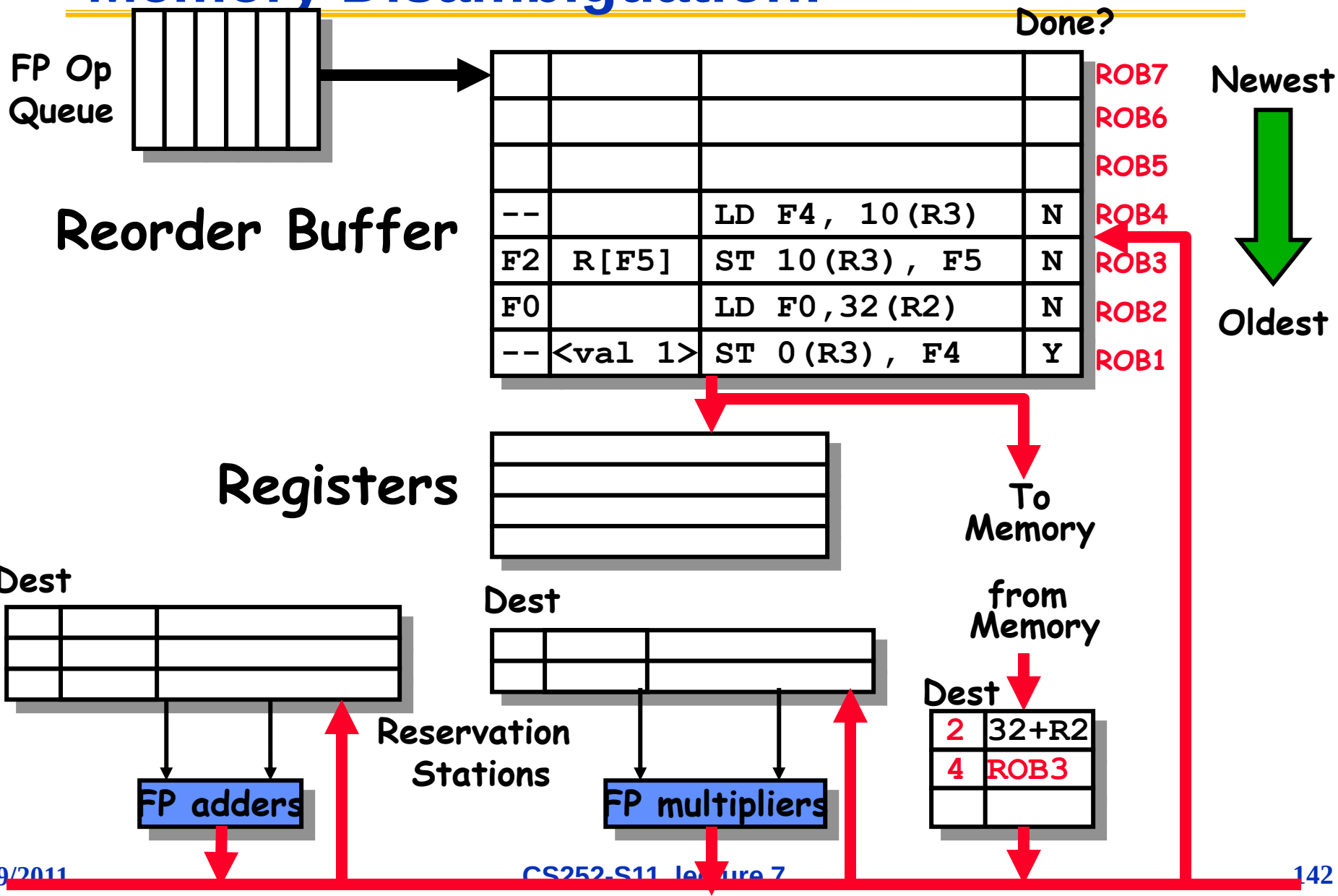

"Data-in-ROB" Design
(HP PA8000, Pentium Pro, Core2Duo, Nehalem)

Oldest →	v	i	Opcode	p	Tag	Src1	p	Tag	Src2	p	Reg	Result	Except?
	v	i	Opcode	p	Tag	Src1	p	Tag	Src2	p	Reg	Result	Except?
	v	i	Opcode	p	Tag	Src1	p	Tag	Src2	p	Reg	Result	Except?
Free →	v	i	Opcode	p	Tag	Src1	p	Tag	Src2	p	Reg	Result	Except?
	v	i	Opcode	p	Tag	Src1	p	Tag	Src2	p	Reg	Result	Except?

- Managed as circular buffer in program order, new instructions dispatched to free slots, oldest instruction committed/reclaimed when done ("p" bit set on result)
- Tag is given by index in ROB (Free pointer value)
- In dispatch, non-busy source operands read from architectural register file and copied to Src1 and Src2 with presence bit "p" set. Busy operands copy tag of producer and clear "p" bit.
- Set valid bit "v" on dispatch, set issued bit "i" on issue
- On completion, search source tags, set "p" bit and copy data into src on tag match. Write result and exception flags to ROB.
- On commit, check exception status, and copy result into architectural register file if no trap.
- On trap, flush machine and ROB, set free=oldest, jump to handler

Managing Rename for Data-in-ROB

Rename table associated with architectural registers, managed in decode/dispatch

p	Tag	Value
p	Tag	Value
p	Tag	Value
p	Tag	Value

One entry per arch. register

- If "p" bit set, then use value in architectural register file
- Else, tag field indicates instruction that will/has produced value
- For dispatch, read source operands <p,tag,value> from arch. regfile, then also read <p,result> from producing instruction in ROB at tag index, bypassing as needed. Copy operands to ROB.
- Write destination arch. register entry with <0,Free,_>, to assign tag to ROB index of this instruction
- On commit, update arch. regfile with <1,_,Result> if tag matches, otherwise update with <0,_,Result>. (Tag value is not updated)
- On trap, reset table (All p=1)

Data Movement in Data-in-ROB Design

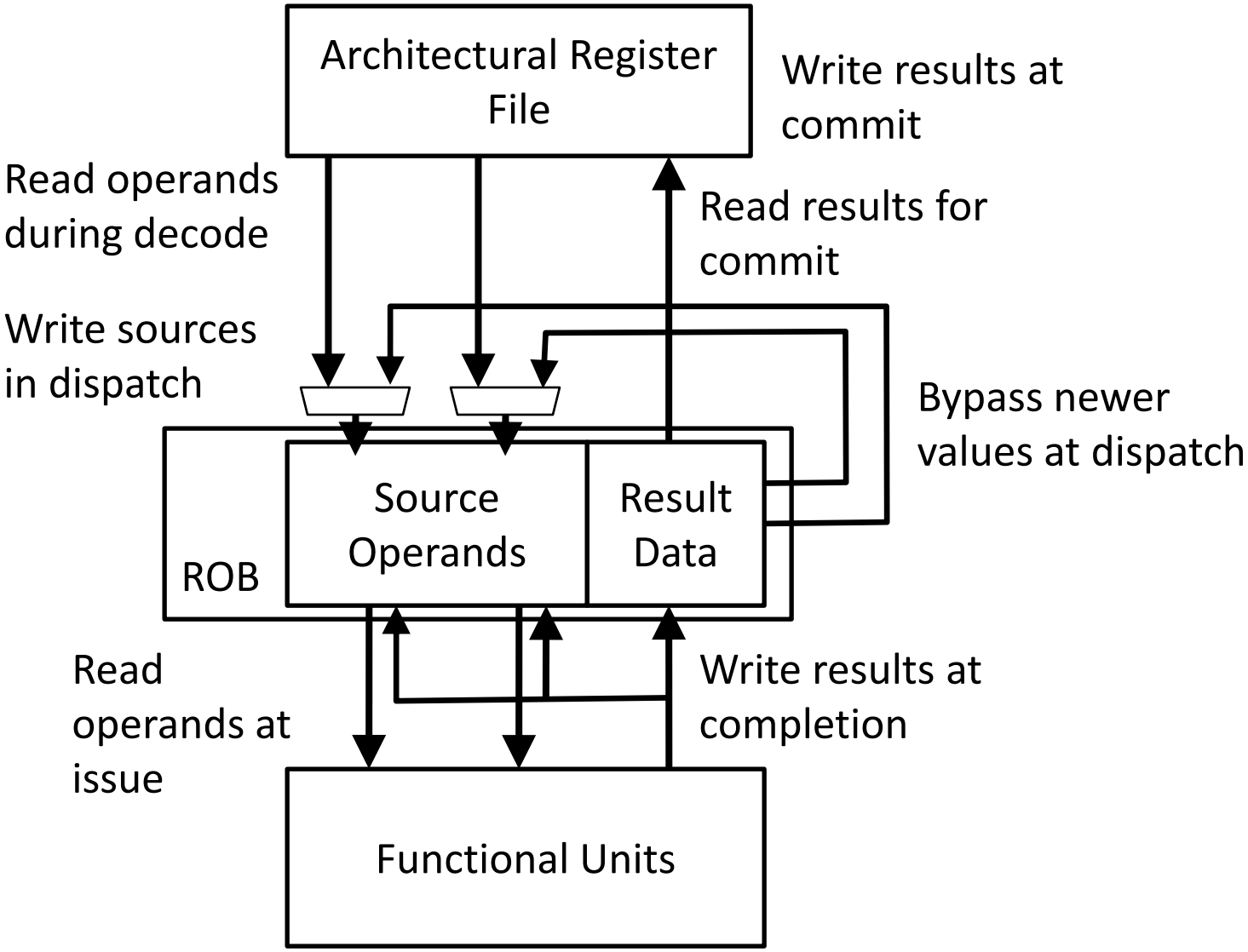

Unified Physical Register File

(MIPS R10K, Alpha 21264, Intel Pentium 4 & Sandy/Ivy Bridge)

- Rename all architectural registers into a single *physical* register file during decode, no register values read
- Functional units read and write from single unified register file holding committed and temporary registers in execute
- Commit only updates mapping of architectural register to physical register, no data movement

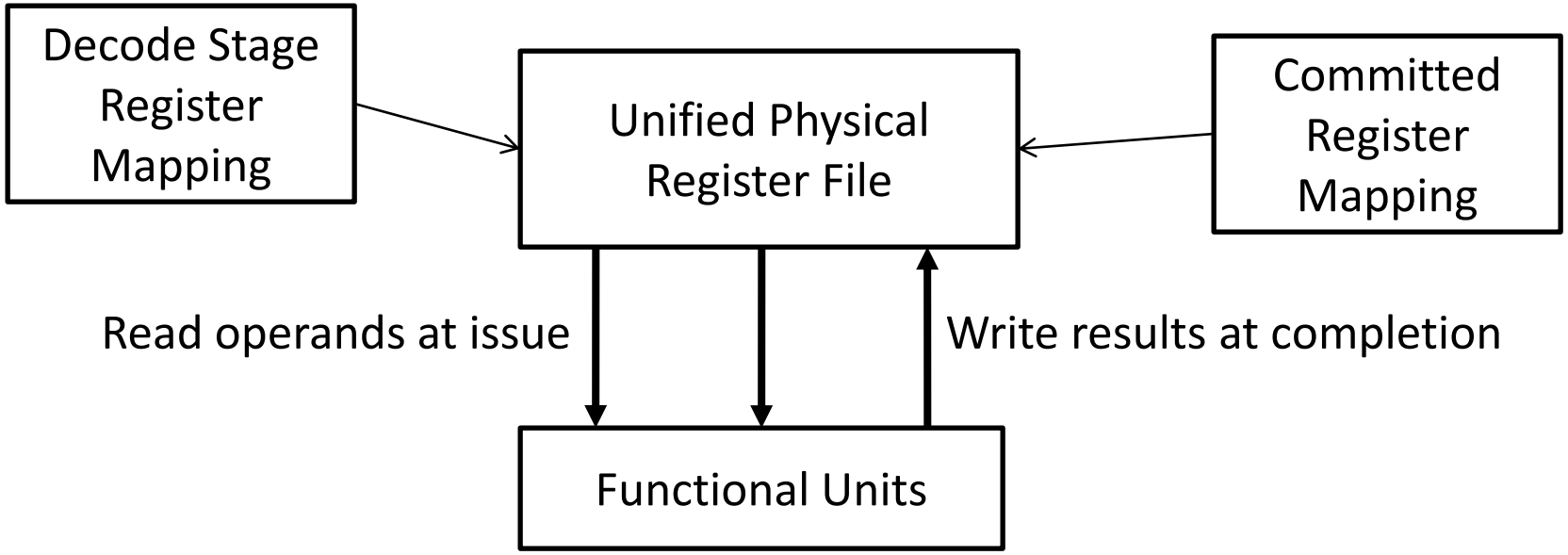

Lifetime of Physical Registers

- Physical regfile holds committed and speculative values
- Physical registers decoupled from ROB entries *(no data in ROB)*

```
ld x1, (x3)
addi x3, x1, #4
sub x6, x7, x9
add x3, x3, x6
ld x6, (x1)
add x6, x6, x3
sd x6, (x1)
ld x6, (x11)
```

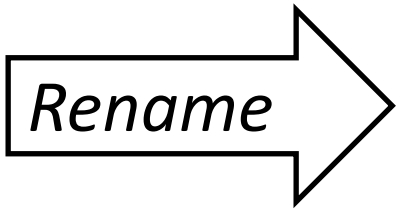


```
ld P1, (Px)
addi P2, P1, #4
sub P3, Py, Pz
add P4, P2, P3
ld P5, (P1)
add P6, P5, P4
sd P6, (P1)
ld P7, (Pw)
```

When can we reuse a physical register?

When next writer of same architectural register commits

Physical Register Management

Rename Table

x0	
x1	P8
x2	
x3	P7
x4	
x5	
x6	P5
x7	P6

Physical Regs

P0		
P1		
P2		
P3		
P4		
P5	<x6>	p
P6	<x7>	p
P7	<x3>	p
P8	<x1>	p
Pn		

Free List

P0
P1
P3
P2
P4

```
ld x1, 0(x3)
addi x3, x1, #4
sub x6, x7, x6
add x3, x3, x6
ld x6, 0(x1)
```

ROB

use	ex	op	p1	PR1	p2	PR2	Rd	LPRd	PRd

(LPRd requires third read port on Rename Table for each instruction)

Physical Register Management

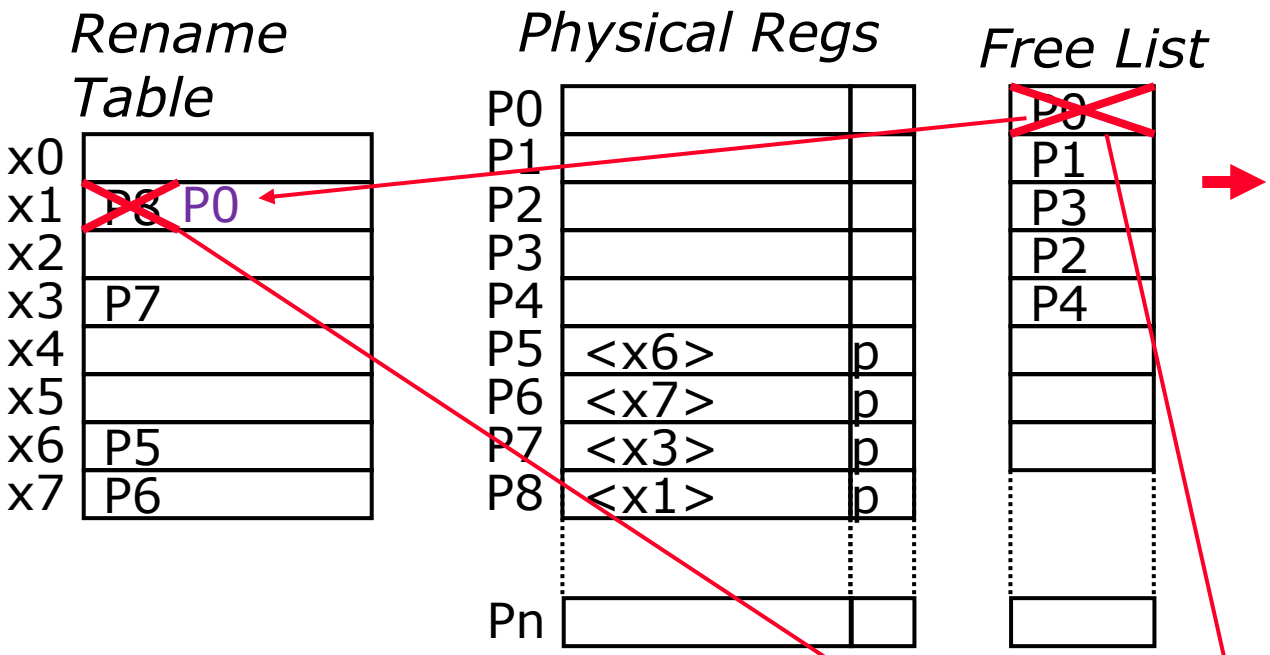

ld x1, 0(x3)
addi x3, x1, #4
sub x6, x7, x6
add x3, x3, x6
ld x6, 0(x1)

ROB

use	ex	op	p1	PR1	p2	PR2	Rd	LPRd	PRd
x		ld	p	P7			x1	P8	P0

Physical Register Management

Rename Table

x0	
x1	~~P8~~ P0
x2	
x3	~~P7~~ P1
x4	
x5	
x6	P5
x7	P6

Physical Regs

P0		
P1		
P2		
P3		
P4		
P5	<x6>	p
P6	<x7>	p
P7	<x3>	p
P8	<R1>	p
Pn		

Free List

~~P0~~
~~P1~~
P3
P2
P4

```
ld x1, 0(x3)
addi x3, x1, #4
sub x6, x7, x6
add x3, x3, x6
ld x6, 0(x1)
```

ROB

use	ex	op	p1	PR1	p2	PR2	Rd	LPRd	PRd
x		ld	p	P7			x1	P8	P0
x		addi		P0			x3	P7	P1

Physical Register Management

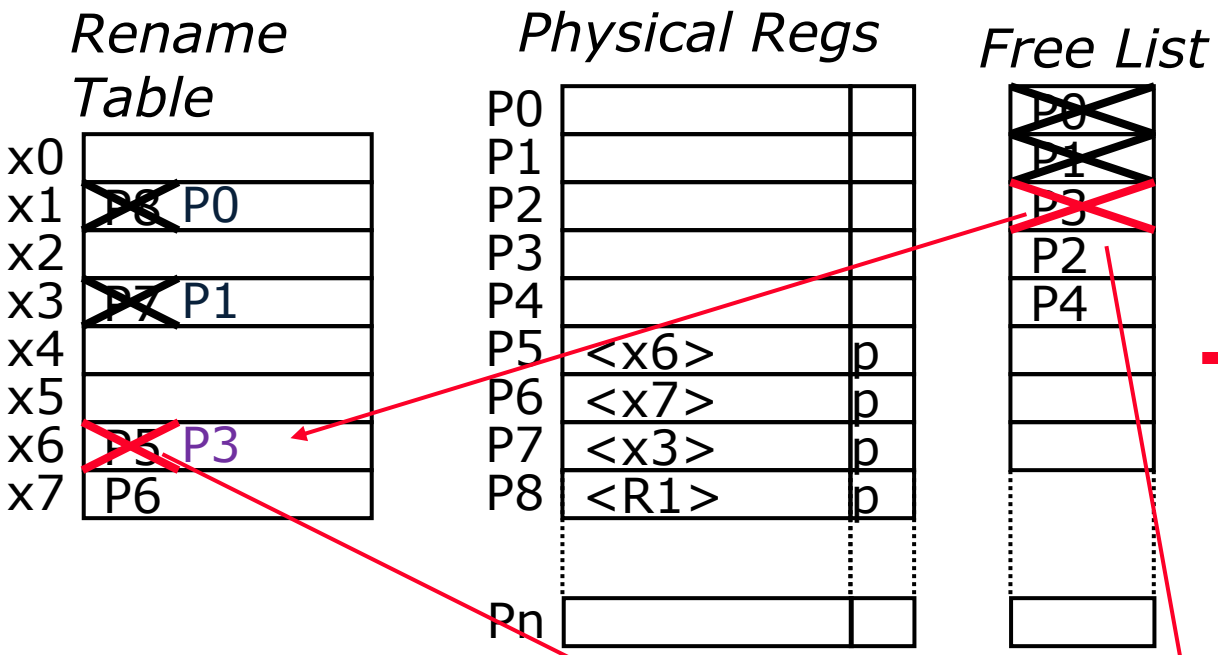


```
ld x1, 0(x3)
addi x3, x1, #4
sub x6, x7, x6
add x3, x3, x6
ld x6, 0(x1)
```

ROB

use	ex	op	p1	PR1	p2	PR2	Rd	LPRd	PRd
x		ld	p	P7			x1	P8	P0
x		addi		P0			x3	P7	P1
x		sub	p	P6	p	P5	x6	P5	P3

Physical Register Management

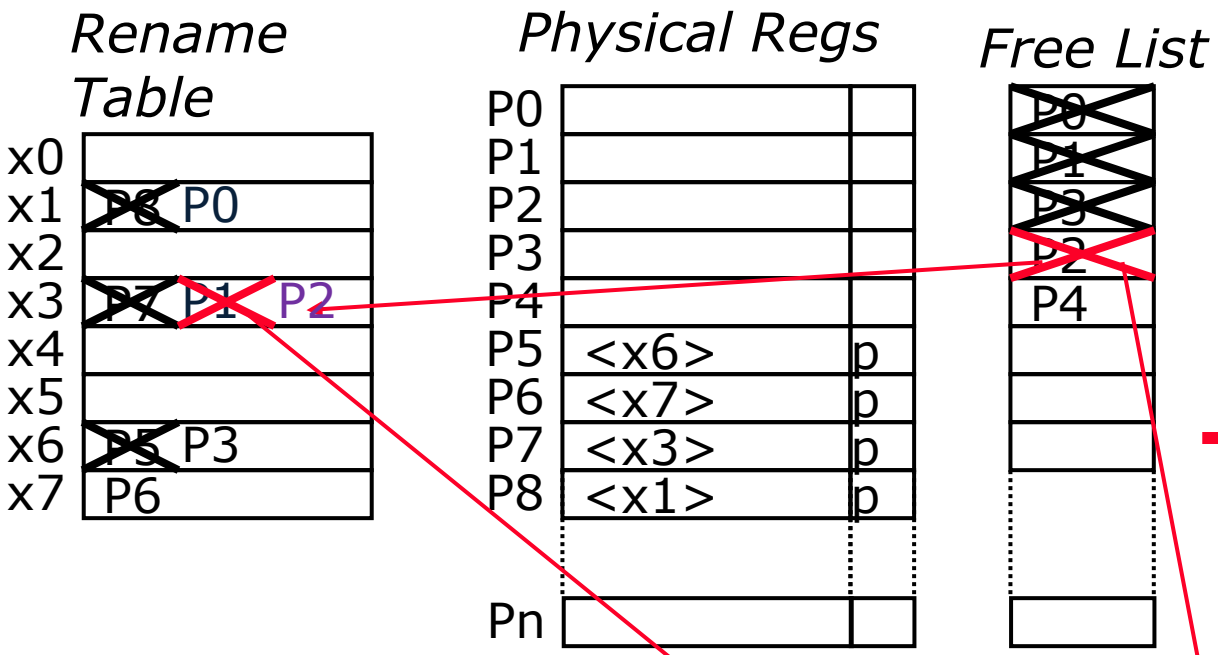

ld x1, 0(x3)
addi x3, x1, #4
sub x6, x7, x6
→ add x3, x3, x6
ld x6, 0(x1)

ROB

use	ex	op	p1	PR1	p2	PR2	Rd	LPRd	PRd
x		ld	p	P7			x1	P8	P0
x		addi		P0			x3	P7	P1
x		sub	p	P6	p	P5	x6	P5	P3
x		add		P1		P3	x3	P1	P2

Physical Register Management

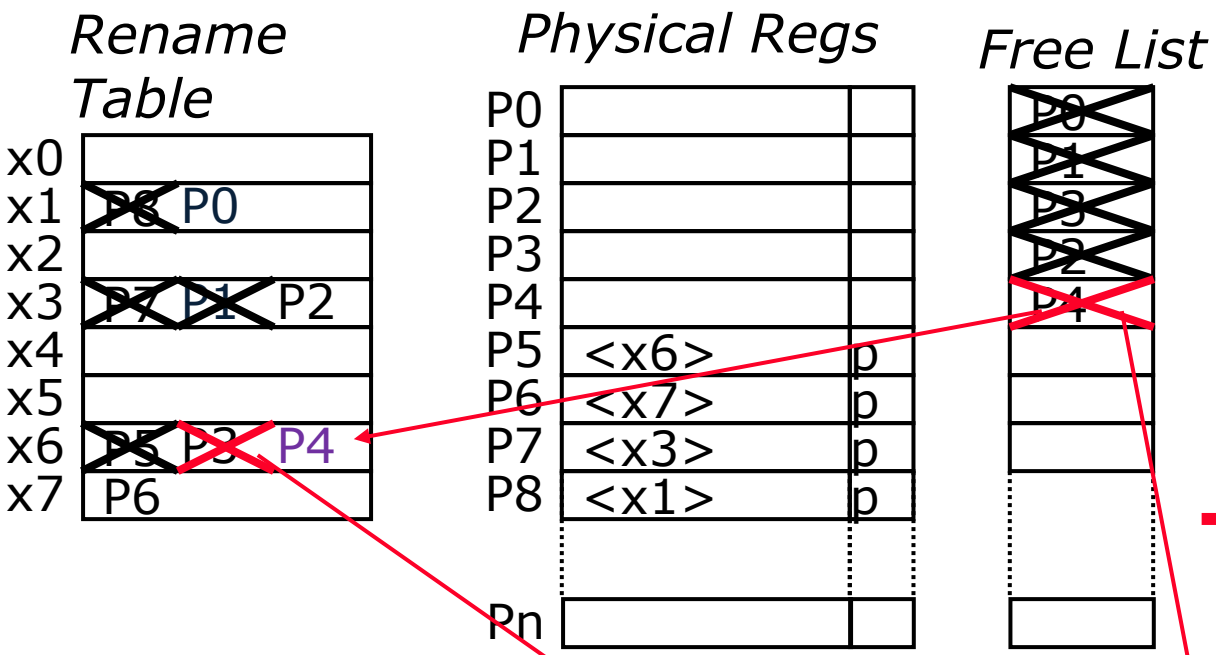

ld x1, 0(x3)
addi x3, x1, #4
sub x6, x7, x6
add x3, x3, x6
→ ld x6, 0(x1)

ROB

use	ex	op	p1	PR1	p2	PR2	Rd	LPRd	PRd
x		ld	p	P7			x1	P8	P0
x		addi		P0			x3	P7	P1
x		sub	p	P6	p	P5	x6	P5	P3
x		add		P1		P3	x3	P1	P2
x		ld		P0			x6	P3	P4

Physical Register Management

Rename Table

x0	
x1	~~P8~~ P0
x2	
x3	~~P7~~ ~~P1~~ P2
x4	
x5	
x6	~~P5~~ ~~P3~~ P4
x7	P6

Physical Regs

P0	<x1>	p
P1		
P2		
P3		
P4		
P5	<x6>	p
P6	<x7>	p
P7	<x3>	p
P8	~~<x1>~~	~~p~~
Pn		

Free List

~~P0~~
~~P1~~
~~P3~~
~~P2~~
~~P4~~
P8

```
ld x1, 0(x3)
addi x3, x1, #4
sub x6, x7, x6
add x3, x3, x6
ld x6, 0(x1)
```

ROB

use	ex	op	p1	PR1	p2	PR2	Rd	LPRd	PRd
x	x	ld	p	P7			x1	P8	P0
x		addi	p	P0			x3	P7	P1
x		sub	p	P6	p	P5	x6	P5	P3
x		add		P1		P3	x3	P1	P2
x		ld	p	P0			x6	P3	P4

Execute & Commit

Physical Register Management

Rename Table

x0	
x1	~~P8~~ P0
x2	
x3	~~P7~~ ~~P1~~ P2
x4	
x5	
x6	~~P5~~ ~~P3~~ P4
x7	P6

Physical Regs

P0	<x1>	p
P1	<x3>	p
P2		
P3		
P4		
P5	<x6>	p
P6	<x7>	p
P7	~~<x3>~~	~~p~~
P8		
Pn		

Free List

~~P0~~
~~P1~~
~~P3~~
~~P2~~
~~P4~~
P8
P7

```
ld x1, 0(x3)
addi x3, x1, #4
sub x6, x7, x6
add x3, x3, x6
ld x6, 0(x1)
```

ROB

use	ex	op	p1	PR1	p2	PR2	Rd	LPRd	PRd
x	x	ld	p	P7			x1	P8	P0
x	x	addi	p	P0			x3	P7	P1
x		sub	p	P6	p	P5	x6	P5	P3
x		add	p	P1		P3	x3	P1	P2
x		ld	p	P0			x6	P3	P4

Execute & Commit

Relationship between precise interrupts and speculation:

- **Speculation is a form of guessing**
  - **Branch prediction, data prediction**
  - **If we speculate and are wrong, need to back up and restart execution to point at which we predicted incorrectly**
  - **This is exactly same as precise exceptions!**
- **Branch prediction is a very important!**
  - **Need to "take our best shot" at predicting branch direction.**
  - **If we issue multiple instructions per cycle, lose lots of potential instructions otherwise:**
    - » **Consider 4 instructions per cycle**
    - » **If take single cycle to decide on branch, waste from 4 - 7 instruction slots!**
- **Technique for both precise interrupts/exceptions and speculation: *in-order completion or commit***
  - **This is why reorder buffers in all new processors**

Quick Recap: Explicit Register Renaming

- **Make use of a *physical* register file that is larger than number of registers specified by ISA**
- **Keep a translation table:**
  - **ISA register => physical register mapping**
  - **When register is written, replace table entry with new register from freelist.**
  - **Physical register becomes free when not being used by any instructions in progress.**

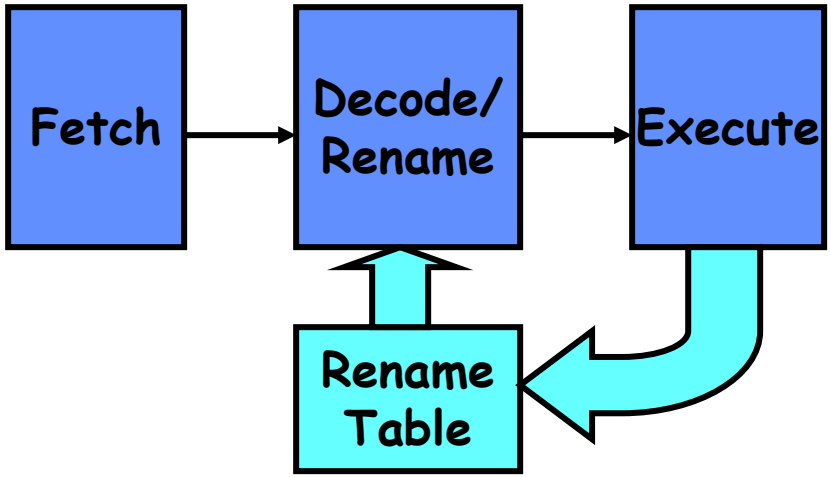

Explicit register renaming:

R10000 Freelist Management

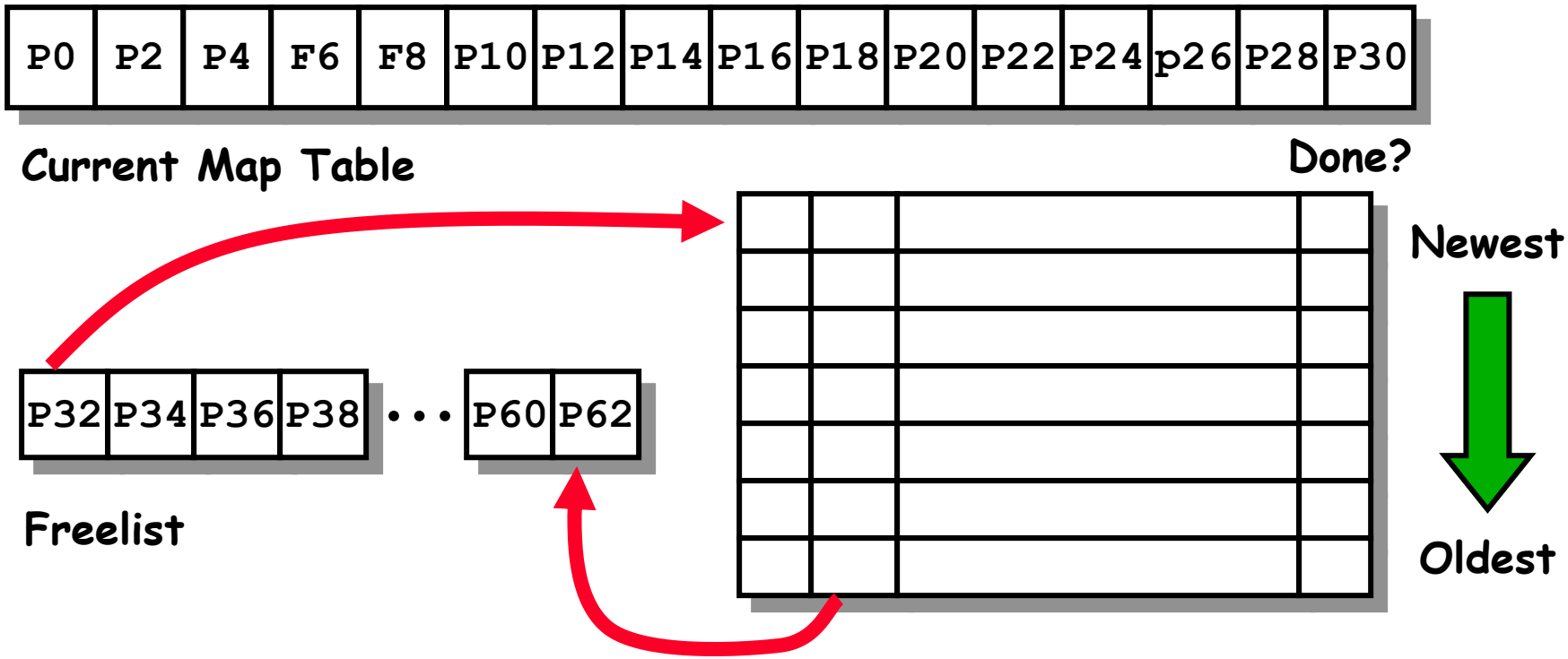

- Physical register file larger than ISA register file
- On issue, each instruction that modifies a register is allocated new physical register from freelist
- Used on: R10000, Alpha 21264, HP PA8000

Explicit register renaming:

R10000 Freelist Management

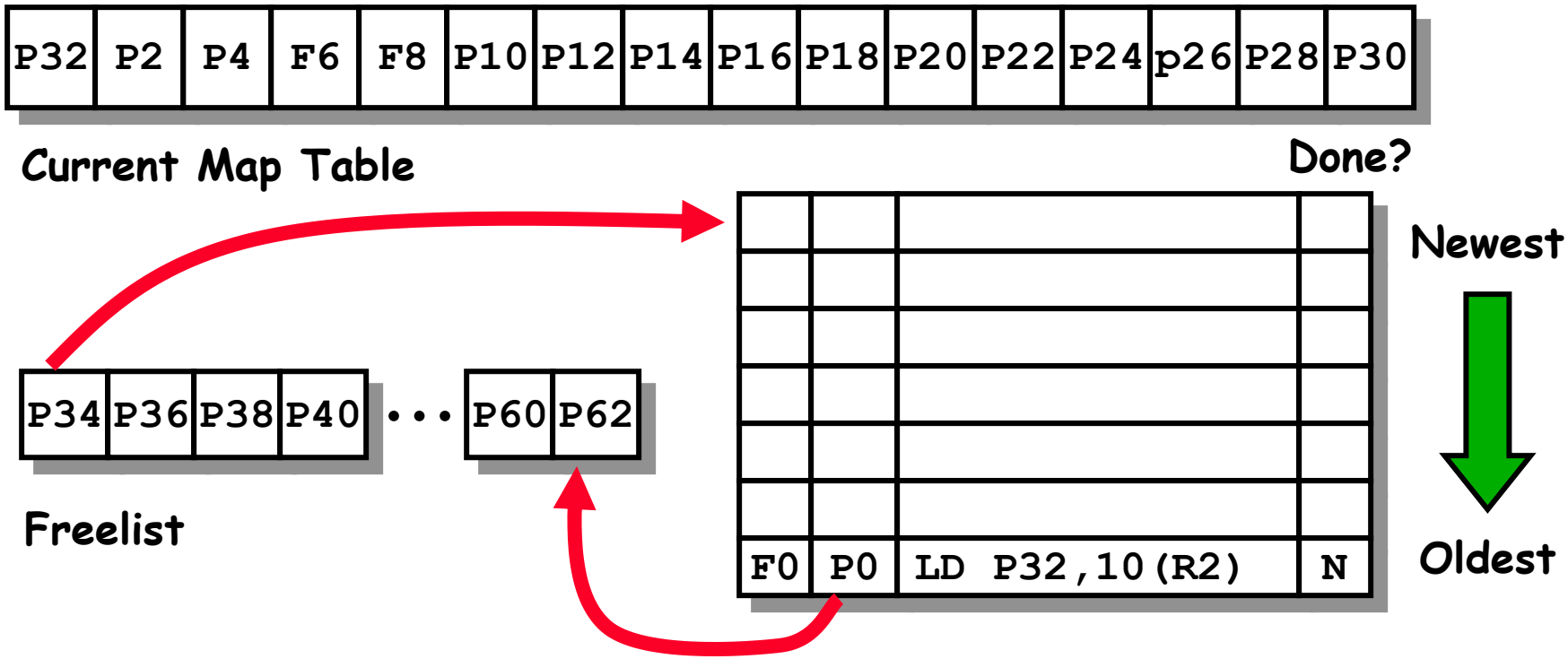

- **Note that physical register P0 is "dead" (or not "live") past the point of this load.**
  - **When we go to commit the load, we free up**

Explicit register renaming:

R10000 Freelist Management

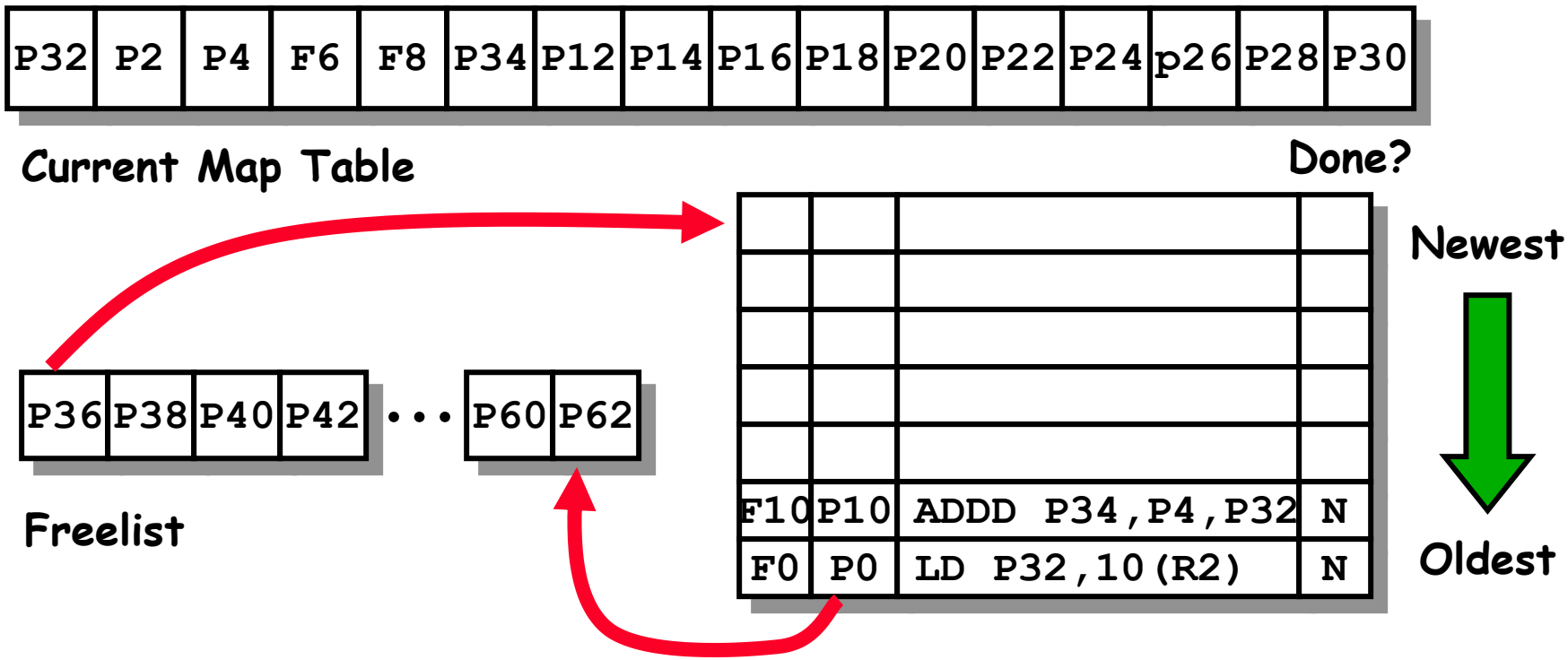

Explicit register renaming:

R10000 Freelist Management

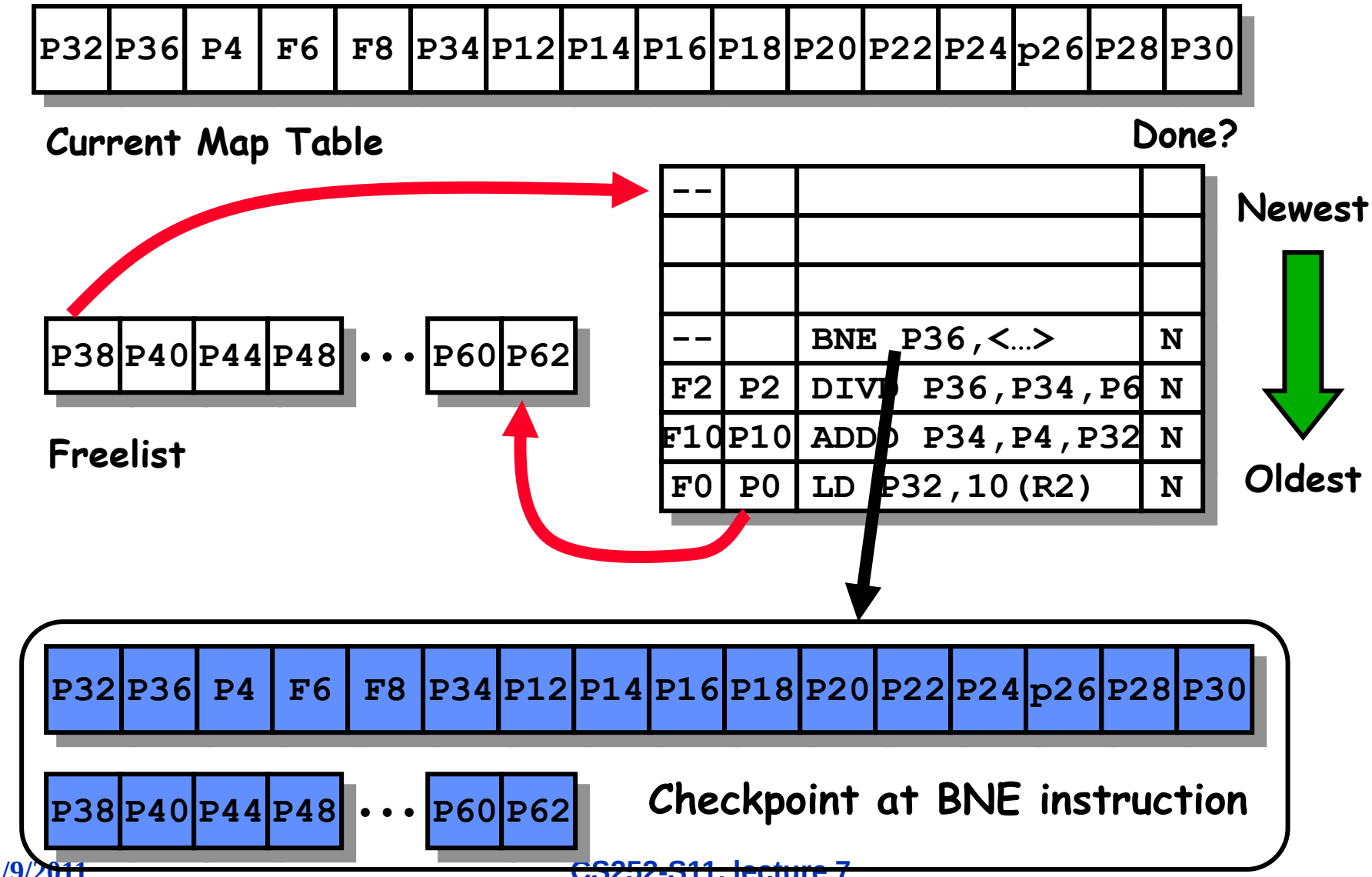

Explicit register renaming:

R10000 Freelist Management

P40	P36	P38	F6	F8	P34	P12	P14	P16	P18	P20	P22	P24	p26	P28	P30

Current Map Table

			Done?
--		ST 0(R3),P40	Y
F0	P32	ADDD P40,P38,P6	Y
F4	P4	LD P38,0(R3)	Y
--		BNE P36,<…>	N
F2	P2	DIVD P36,P34,P6	N
F10	P10	ADDD P34,P4,P32	y
F0	P0	LD P32,10(R2)	y

Newest

Oldest

P42	P44	P48	P50	…	P0	P10

Freelist

P32	P36	P4	F6	F8	P34	P12	P14	P16	P18	P20	P22	P24	p26	P28	P30

P38	P40	P44	P48	…	P60	P62

Checkpoint at BNE instruction

Explicit register renaming:

R10000 Freelist Management

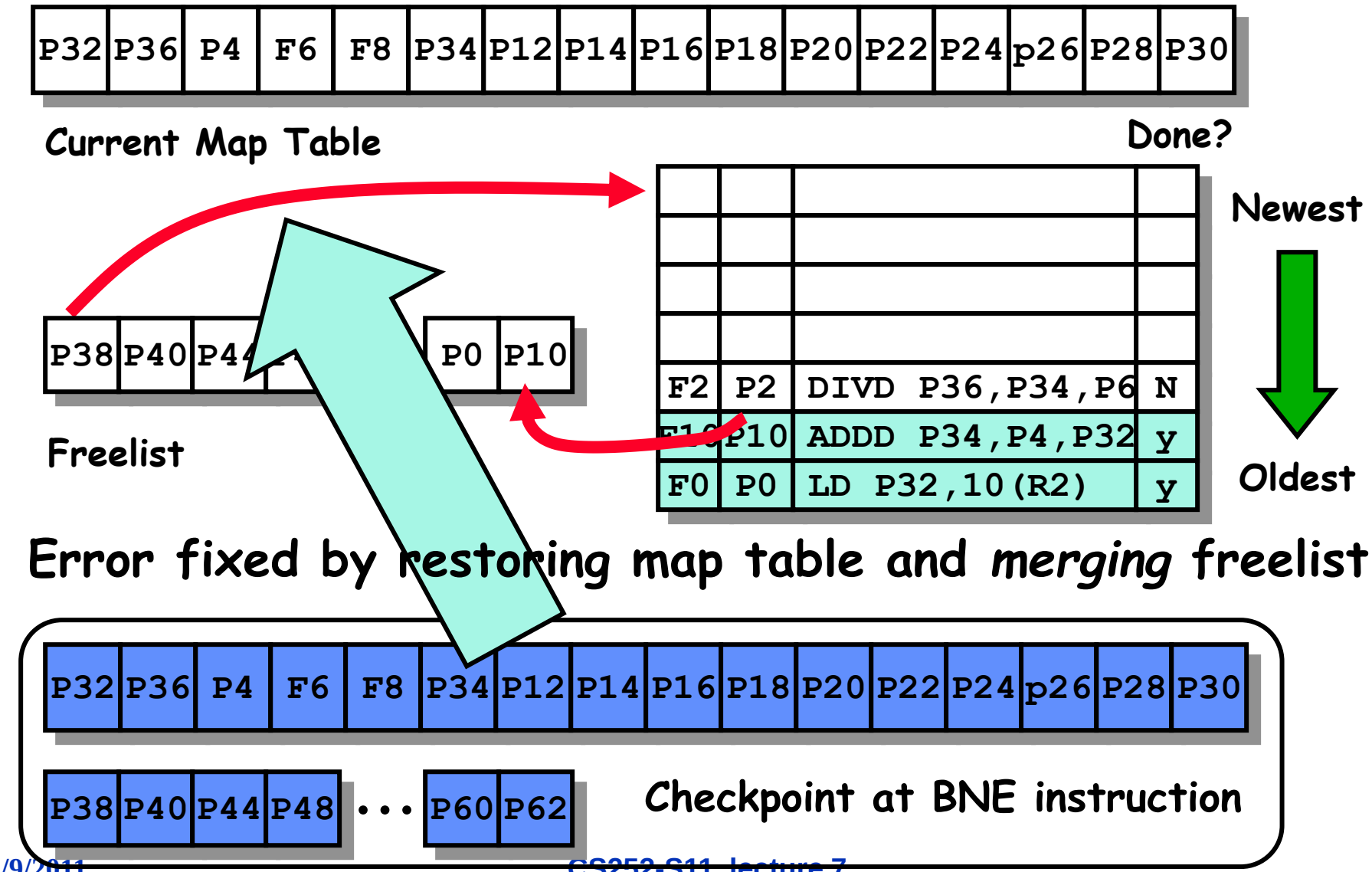

Advantages of Explicit Renaming

- **Decouples *renaming* from *scheduling:***
  - **Pipeline can be exactly like "standard" DLX pipeline (perhaps with multiple operations issued per cycle)**
  - **Or, pipeline could be tomasulo-like or a scoreboard, etc.**
  - **Standard forwarding or bypassing could be used**
- **Allows data to be fetched from single register file**
  - **No need to bypass values from reorder buffer**
  - **This can be important for balancing pipeline**
- **Many processors use a variant of this technique:**
  - **R10000, Alpha 21264, HP PA8000**
- **Another way to get precise interrupt points:**
  - **All that needs to be "undone" for precise break point is to undo the table mappings**
  - **Provides an interesting mix between reorder buffer and future file**
    - » **Results are written immediately back to register file**
    - » **Registers *names* are "freed" in program order (by ROB)**

Repairing Rename at Traps

- MIPS R10K rename table is repaired by unrenaming instructions in reverse order using the PRd/LPRd fields
- Alpha 21264 had similar physical register file scheme, but kept complete rename table snapshots for each instruction in ROB (80 snapshots total)
  - Flash copy all bits from snapshot to active table in one cycle

Reorder Buffer Holds Active Instructions (Decoded but not Committed)

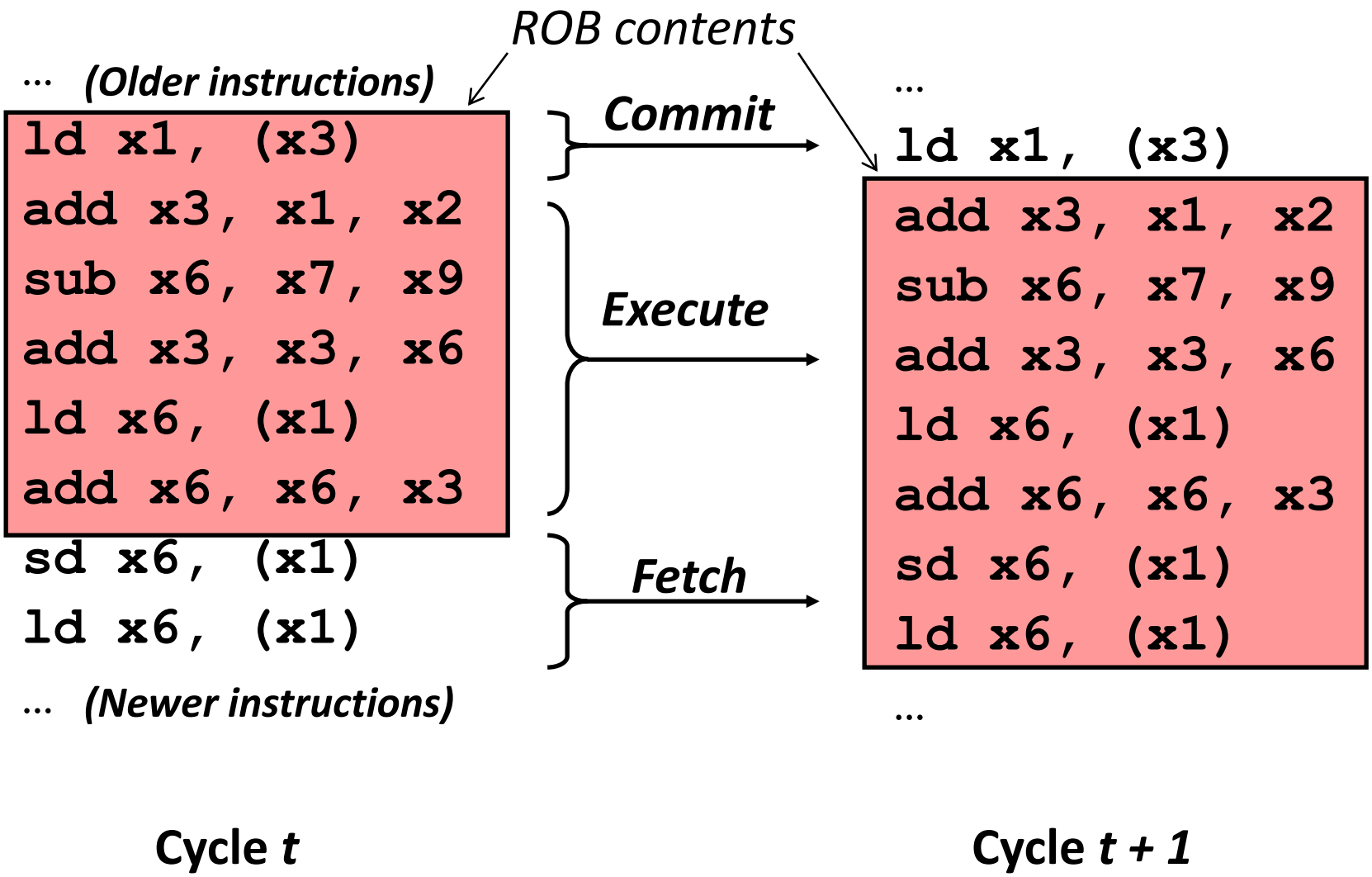

Separate Issue Window from ROB

The issue window holds only instructions that have been decoded and renamed but not issued into execution. Has register tags and presence bits, and pointer to ROB entry.

use	ex	op	p1	PR1	p2	PR2	PRd	ROB#

Reorder buffer used to hold exception information for commit.

Oldest

Free

Done?	Rd	LPRd	PC	Except?

ROB is usually several times larger than issue window – why?

Superscalar Register Renaming

- During decode, instructions allocated new physical destination register
- Source operands renamed to physical register with newest value
- Execution unit only sees physical register numbers

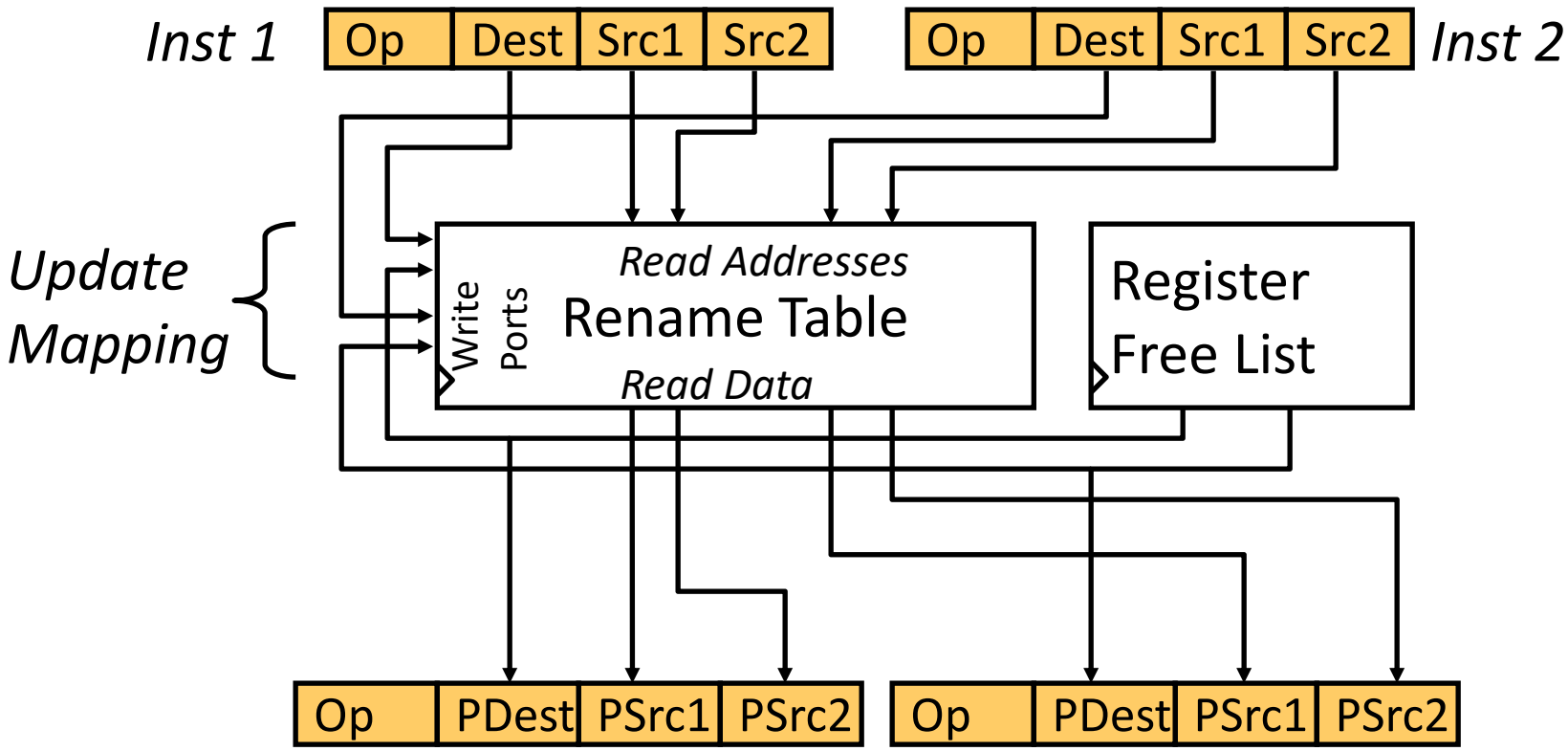

Does this work?

Superscalar Register Renaming

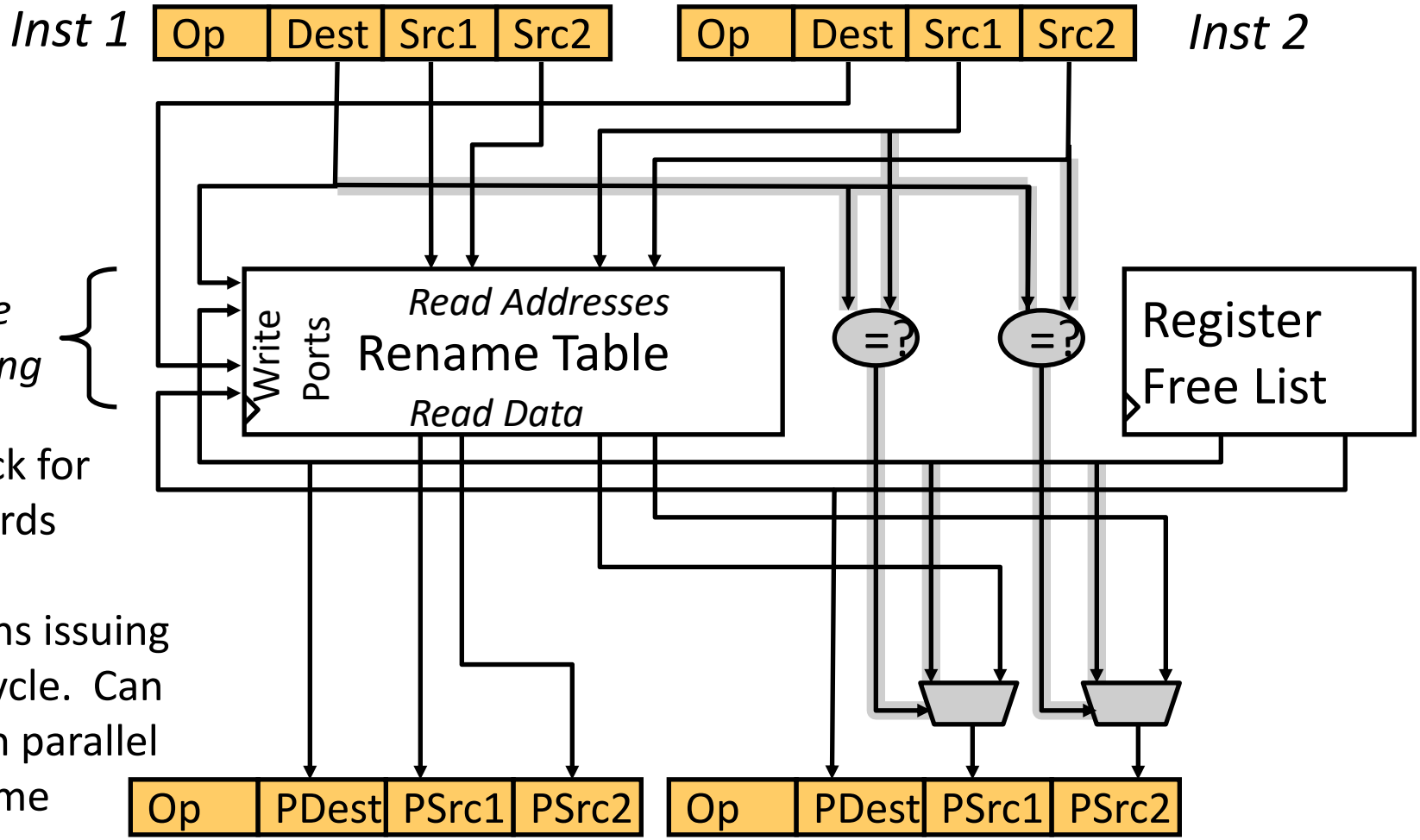

Must check for RAW hazards between instructions issuing in same cycle. Can be done in parallel with rename lookup.

MIPS R10K renames 4 serially-RAW-dependent insts/cycle

Superscalar Register Renaming

- During decode, instructions allocated new physical destination register
- Source operands renamed to physical register with newest value
- Execution unit only sees physical register numbers

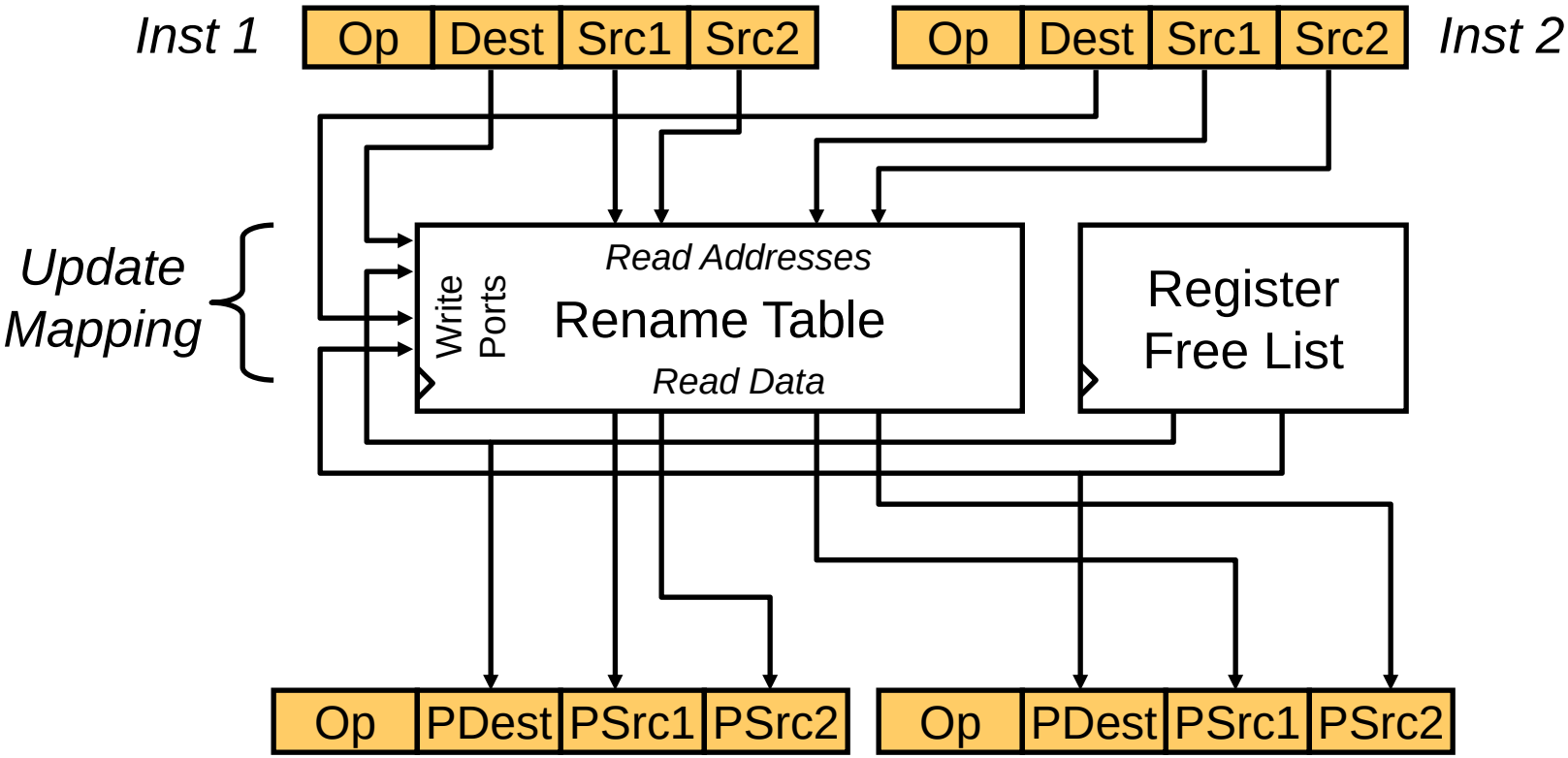

Does this work?

Superscalar Register Renaming (Try #2)

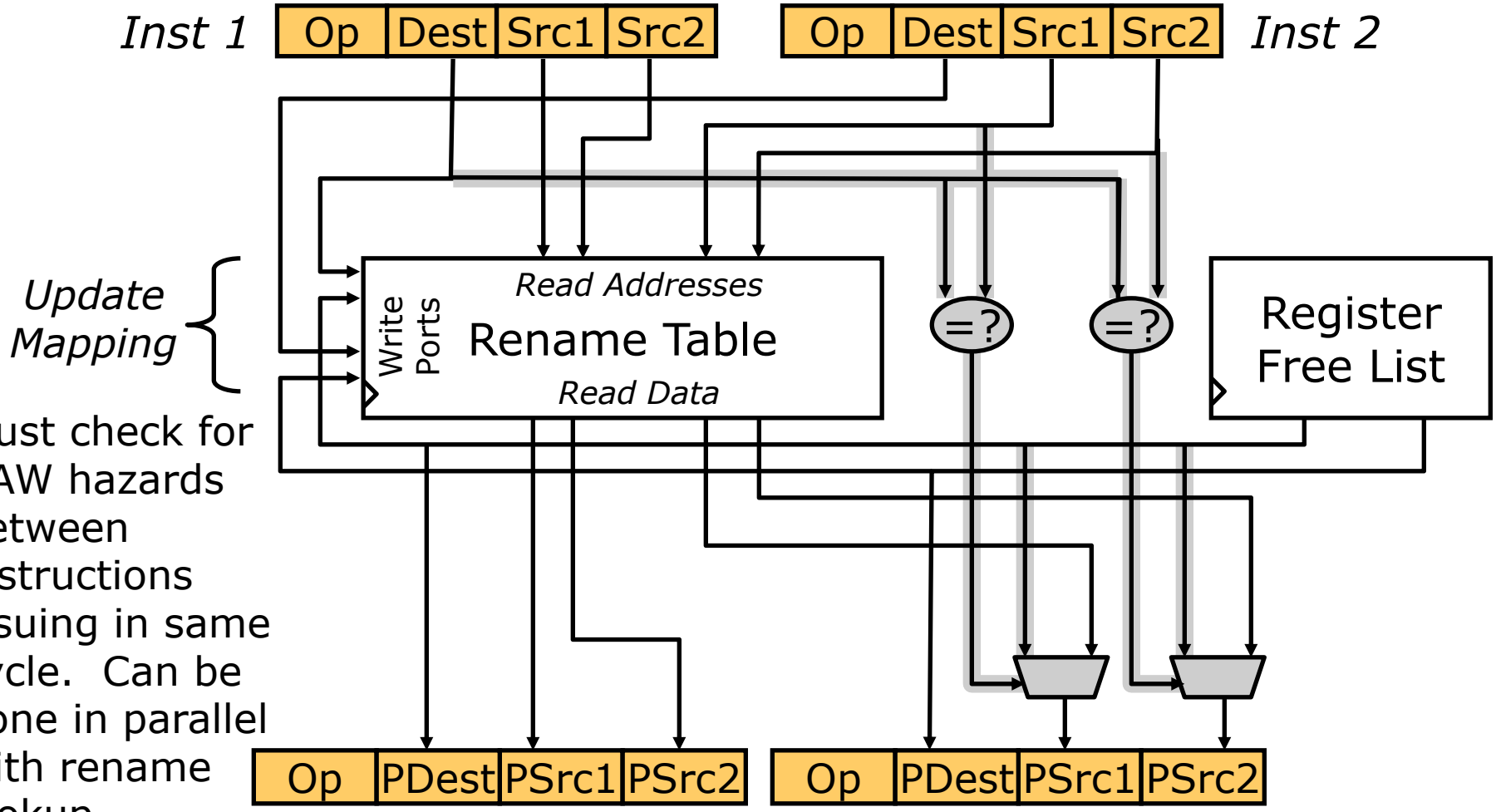

Must check for RAW hazards between instructions issuing in same cycle. Can be done in parallel with rename lookup.

MIPS R10K renames 4 serially-RAW-dependent insts/cycle

Summary

- **DataFlow view:**
  - Data triggers execution rather than instructions triggering data
- **Dynamic hardware schemes can unroll loops dynamically in hardware**
  - Form of limited dataflow
  - Register renaming is essential
- **Explicit Renaming: more physical registers than needed by ISA.**
  - Rename table: tracks current association between architectural registers and physical registers
  - Uses a translation table to perform compiler-like transformation on the fly
- **Precise Interrupts:**
  - Must commit things back in order
  - Reorder buffer: temporarily holds results until commit possible
  - Toss out things to achieve precise interrupt point

Acknowledgements

- This course is partly inspired by previous MIT 6.823 and Berkeley CS252 computer architecture courses created by my collaborators and colleagues:
  - Arvind (MIT)
  - Joel Emer (Intel/MIT)
  - James Hoe (CMU)
  - John Kubiatowicz (UCB)
  - David Patterson (UCB)