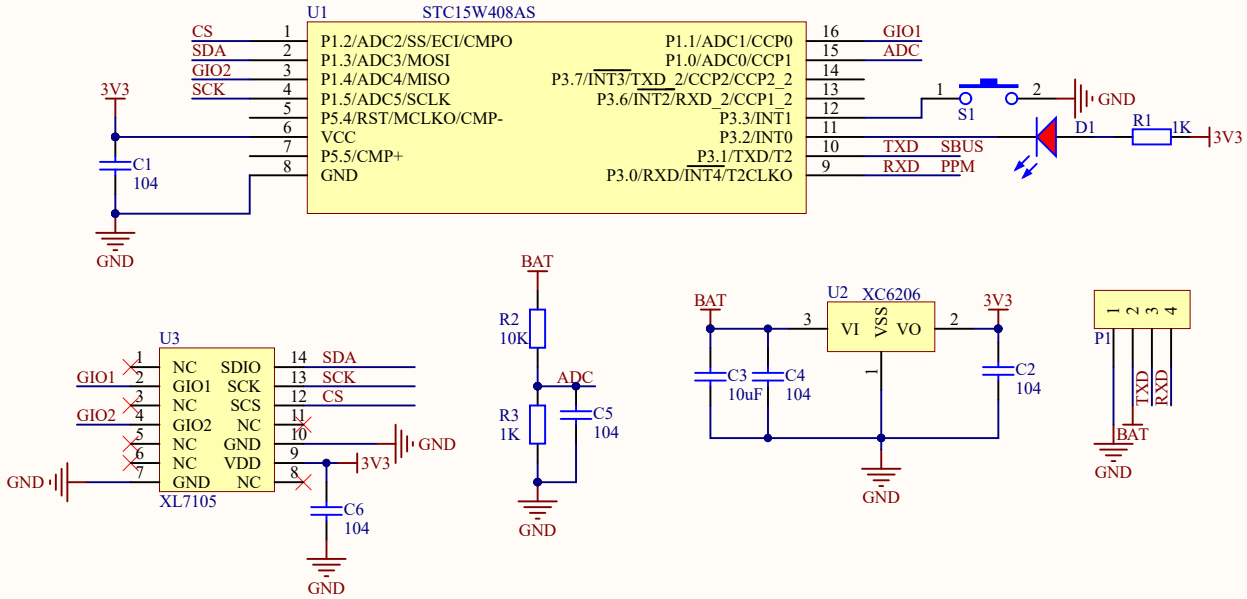

Title		
Size A4	Number	Revision
Date: 2019/6/17	Sheet of	
File: E:\adprogram\flySky2A\flySky2A.SchDoc	Drawn By:	