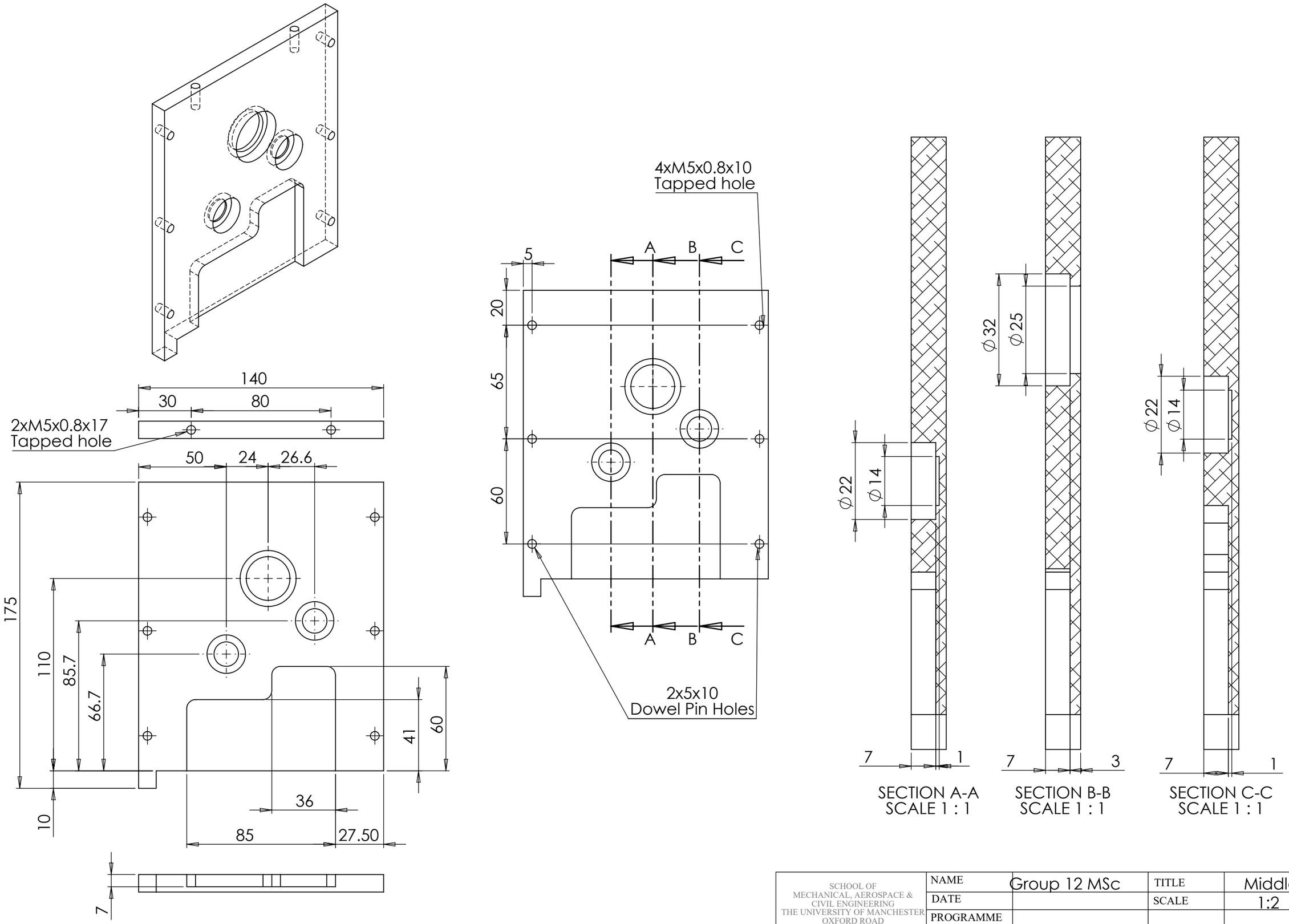


| | | | | |
|---|---|---|---|---|
| SCHOOL OF MECHANICAL, AEROSPACE & CIVIL ENGINEERING THE UNIVERSITY OF MANCHESTER OXFORD ROAD MANCHESTER M13 9PL | NAME | Group 12 MSc | TITLE | Middle Wall |
| | DATE | | SCALE | 1:2 |
| | PROGRAMME | | PROJECTION | |
| | EMAIL | | | |