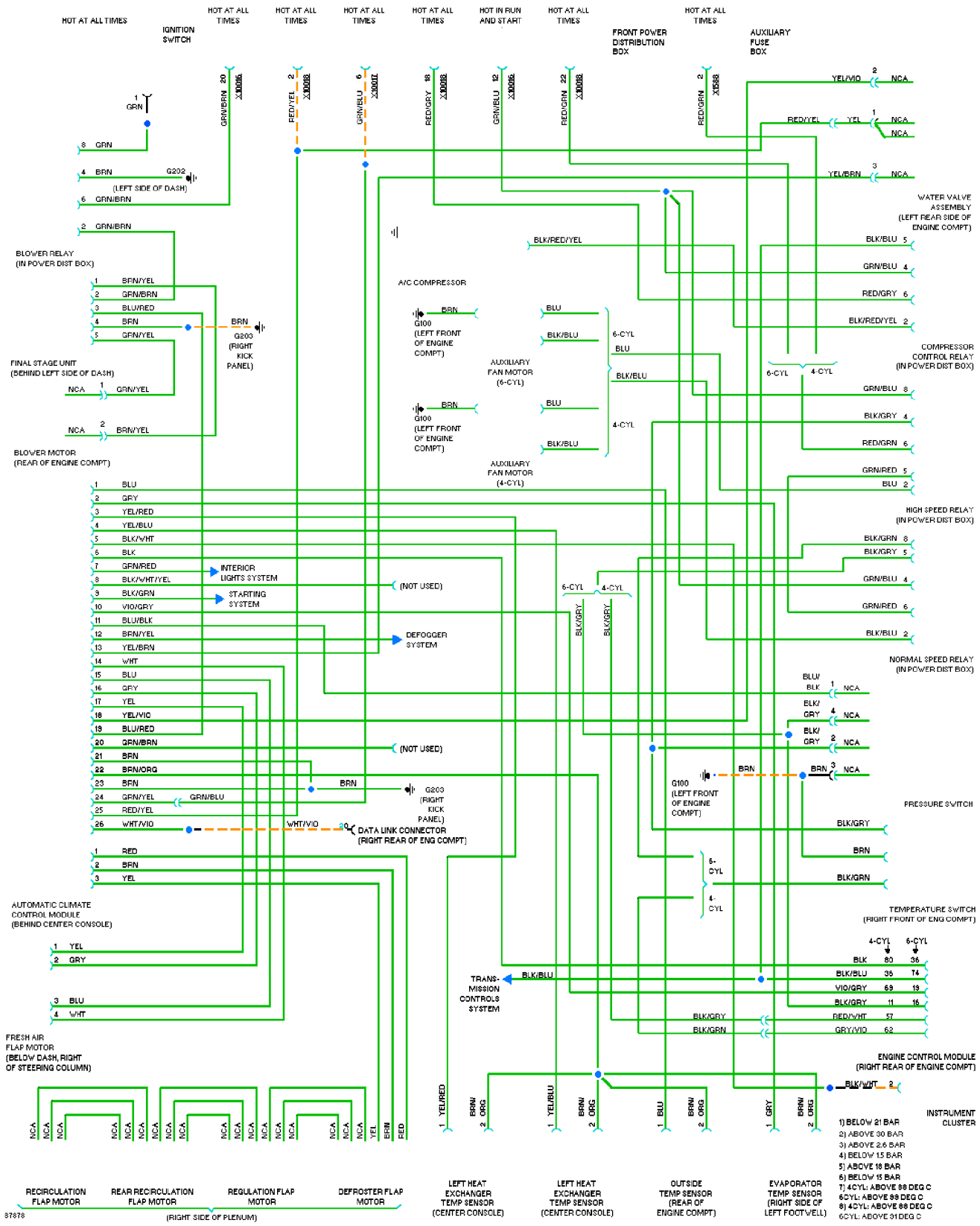
HOT AT ALL TIMES
IGNITION SWITCH
HOT AT ALL TIMES
HOT AT ALL TIMES
HOT AT ALL TIMES
HOT AT ALL TIMES
HOT IN RUN AND START
HOT AT ALL TIMES
FRONT POWER DISTRIBUTION BOX
HOT AT ALL TIMES
AUXILIARY FUSE BOX
GRN/BRN 20 X10016
RED/YEL 2 X10016
GRN/BLU 6 X10017
RED/GRY 16 X10016
GRN/BLU 12 X10016
RED/GRN 22 X10016
RED/GRN 2 X5568
1 GRN
8 GRN
4 BRN G202
(LEFT SIDE OF DASH)
6 GRN/BRN
2 GRN/BRN
BLOWER RELAY
(IN POWER DIST BOX)
1 BRN/YEL
2 GRN/BRN
3 BLU/RED
4 BRN
5 GRN/YEL
BRN
G203
(RIGHT KICK PANEL)
FINAL STAGE UNIT
(BEHIND LEFT SIDE OF DASH)
NCA 1 GRN/YEL
NCA 2 BRN/YEL
BLOWER MOTOR
(REAR OF ENGINE COMPT)
A/C COMPRESSOR
BRN
G100
(LEFT FRONT OF ENGINE COMPT)
BRN
G100
(LEFT FRONT OF ENGINE COMPT)
BLU
BLK/BLU
AUXILIARY FAN MOTOR (6-CYL)
BLU
BLK/BLU
AUXILIARY FAN MOTOR (4-CYL)
6-CYL
BLU
BLK/BLU
4-CYL
BLK/RED/YEL
1 BLU
2 GRY
3 YEL/RED
4 YEL/BLU
5 BLK/WHT
6 BLK
7 GRN/RED
8 BLK/WHT/YEL
9 BLK/GRN
10 VIO/GRY
11 BLU/BLK
12 BRN/YEL
13 YEL/BRN
14 WHT
15 BLU
16 GRY
17 YEL
18 YEL/VIO
19 BLU/RED
20 GRN/BRN
21 BRN
22 BRN/ORG
23 BRN
24 GRN/YEL
25 RED/YEL
26 WHT/VIO
INTERIOR LIGHTS SYSTEM
STARTING SYSTEM
(NOT USED)
DEFOGGER SYSTEM
(NOT USED)
BRN
G203
(RIGHT KICK PANEL)
GRN/BLU
WHT/VIO
DATA LINK CONNECTOR
(RIGHT REAR OF ENG COMPT)
AUTOMATIC CLIMATE CONTROL MODULE
(BEHIND CENTER CONSOLE)
1 YEL
2 GRY
3 BLU
4 WHT
1 RED
2 BRN
3 YEL
FRESH AIR FLAP MOTOR
(BELOW DASH, RIGHT OF STEERING COLUMN)
NCA
YEL
BRN
RED
RECIRCULATION FLAP MOTOR
REAR RECIRCULATION FLAP MOTOR
REGULATION FLAP MOTOR
DEFROSTER FLAP MOTOR
(RIGHT SIDE OF PLENUM)
87878
6-CYL
4-CYL
BLK/GRY
BLK/GRY
TRANS-MISSION CONTROLS SYSTEM
BLK/BLU
1 YEL/RED
BRN/ ORG 2
1 YEL/BLU
BRN/ ORG 2
1 BLU
BRN/ ORG 2
1 GRY
BRN/ ORG 2
LEFT HEAT EXCHANGER TEMP SENSOR (CENTER CONSOLE)
LEFT HEAT EXCHANGER TEMP SENSOR (CENTER CONSOLE)
OUTSIDE TEMP SENSOR (REAR OF ENGINE COMPT)
EVAPORATOR TEMP SENSOR (RIGHT SIDE OF LEFT FOOTWELL)
YEL/VIO 2 NCA
RED/YEL YEL 1 NCA
NCA
YEL/BRN 3 NCA
WATER VALVE ASSEMBLY
(LEFT REAR SIDE OF ENGINE COMPT)
BLK/BLU 5
GRN/BLU 4
RED/GRY 6
BLK/RED/YEL 2
COMPRESSOR CONTROL RELAY
(IN POWER DIST BOX)
6-CYL
4-CYL
GRN/BLU 8
BLK/GRY 4
RED/GRN 6
GRN/RED 5
BLU 2
HIGH SPEED RELAY
(IN POWER DIST BOX)
BLK/GRN 8
BLK/GRY 5
GRN/BLU 4
GRN/RED 6
BLK/BLU 2
NORMAL SPEED RELAY
(IN POWER DIST BOX)
BLU/ BLK 1 NCA
BLK/ GRY 4 NCA
BLK/ GRY 2 NCA
BRN
BRN 3 NCA
G100
(LEFT FRONT OF ENGINE COMPT)
PRESSURE SWITCH
BLK/GRY
BRN
BLK/GRN
6-CYL
4-CYL
TEMPERATURE SWITCH
(RIGHT FRONT OF ENG COMPT)
4-CYL 6-CYL
BLK 80 36
BLK/BLU 35 74
VIO/GRY 69 19
BLK/GRY 11 16
BLK/GRY RED/WHT 57
BLK/GRN GRY/VIO 62
ENGINE CONTROL MODULE
(RIGHT REAR OF ENGINE COMPT)
BLK/WHT 2
INSTRUMENT CLUSTER
1) BELOW 21 BAR
2) ABOVE 30 BAR
3) ABOVE 2.6 BAR
4) BELOW 1.5 BAR
5) ABOVE 18 BAR
6) BELOW 15 BAR
7) 4CYL: ABOVE 88 DEG C
6CYL: ABOVE 99 DEG C
8) 4CYL: ABOVE 88 DEG C
6CYL: ABOVE 91 DEG C

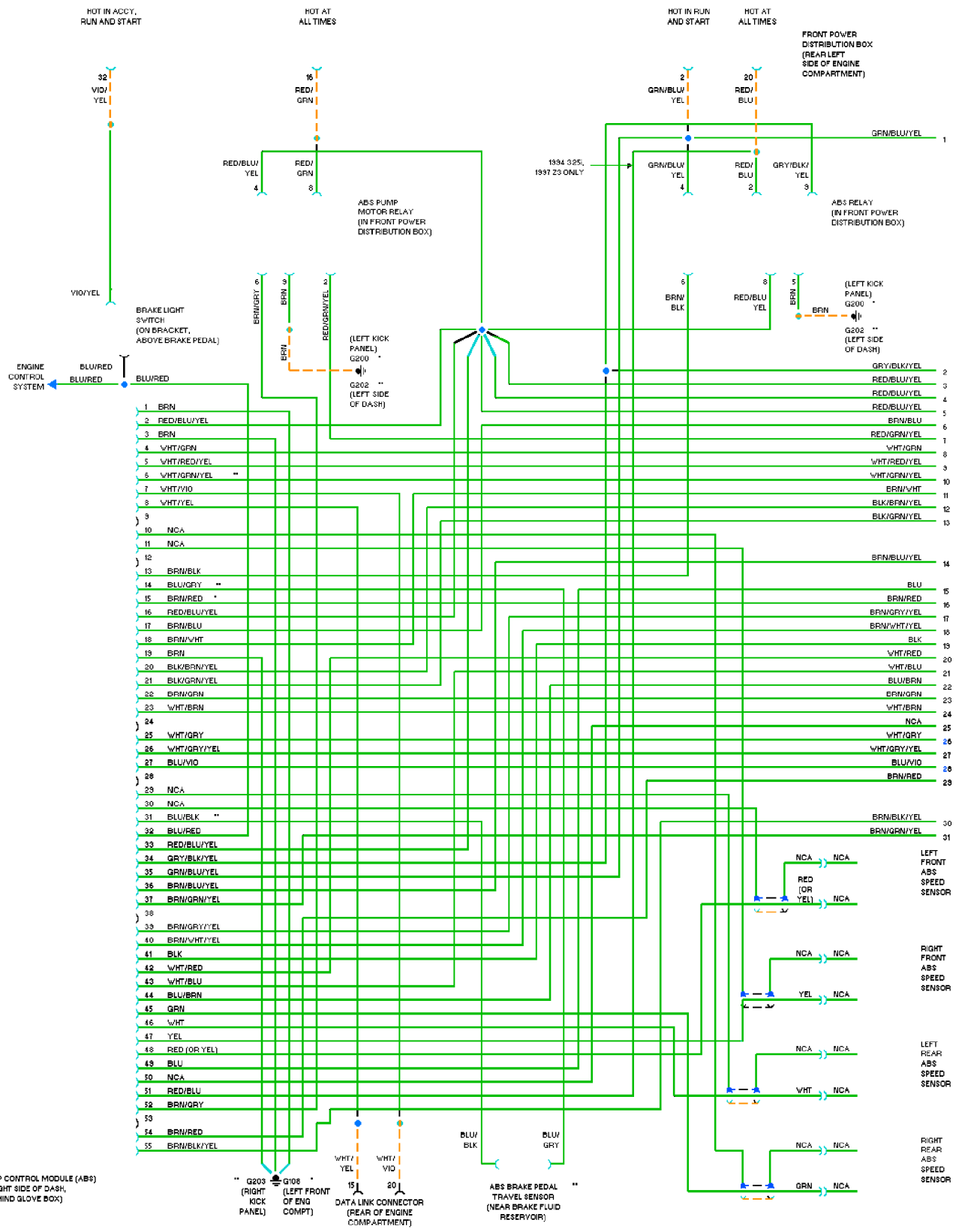
HOT IN ACCY, RUN AND START
HOT AT ALL TIMES
HOT IN RUN AND START
HOT AT ALL TIMES
FRONT POWER DISTRIBUTION BOX (REAR LEFT SIDE OF ENGINE COMPARTMENT)
32 VIO/YEL
16 RED/GRN
2 GRN/BLU/YEL
20 RED/BLU
GRN/BLU/YEL 1
RED/BLU/YEL 4
RED/GRN 3
1994 325, 1997 Z3 ONLY
GRN/BLU/YEL 4
RED/BLU 2
GRY/BLK/YEL 3
ABS PUMP MOTOR RELAY (IN FRONT POWER DISTRIBUTION BOX)
ABS RELAY (IN FRONT POWER DISTRIBUTION BOX)
VIO/YEL
BRAKE LIGHT SWITCH (ON BRACKET, ABOVE BRAKE PEDAL)
6 BRN/GRY
3 BRN
2 RED/GRN/YEL
BRN
(LEFT KICK PANEL) G200 *
G202 ** (LEFT SIDE OF DASH)
6 BRN/BLK
8 RED/BLU YEL
5 BRN
BRN
(LEFT KICK PANEL) G200 *
G202 ** (LEFT SIDE OF DASH)
ENGINE CONTROL SYSTEM
BLU/RED
BLU/RED
BLU/RED
1 BRN
2 RED/BLU/YEL
3 BRN
4 WHT/GRN
5 WHT/RED/YEL
6 WHT/GRN/YEL **
7 WHT/VIO
8 WHT/YEL
9
10 NCA
11 NCA
12
13 BRN/BLK
14 BLU/GRY **
15 BRN/RED *
16 RED/BLU/YEL
17 BRN/BLU
18 BRN/WHT
19 BRN
20 BLK/BRN/YEL
21 BLK/GRN/YEL
22 BRN/GRN
23 WHT/BRN
24
25 WHT/GRY
26 WHT/GRY/YEL
27 BLU/VIO
28
29 NCA
30 NCA
31 BLU/BLK **
32 BLU/RED
33 RED/BLU/YEL
34 GRY/BLK/YEL
35 GRN/BLU/YEL
36 BRN/BLU/YEL
37 BRN/GRN/YEL
38
39 BRN/GRY/YEL
40 BRN/WHT/YEL
41 BLK
42 WHT/RED
43 WHT/BLU
44 BLU/BRN
45 GRN
46 WHT
47 YEL
48 RED (OR YEL)
49 BLU
50 NCA
51 RED/BLU
52 BRN/GRY
53
54 BRN/RED
55 BRN/BLK/YEL
GRY/BLK/YEL 2
RED/BLU/YEL 3
RED/BLU/YEL 4
RED/BLU/YEL 5
BRN/BLU 6
RED/GRN/YEL 7
WHT/GRN 8
WHT/RED/YEL 9
WHT/GRN/YEL 10
BRN/WHT 11
BLK/BRN/YEL 12
BLK/GRN/YEL 13
BRN/BLU/YEL 14
BLU 15
BRN/RED 16
BRN/GRY/YEL 17
BRN/WHT/YEL 18
BLK 19
WHT/RED 20
WHT/BLU 21
BLU/BRN 22
BRN/GRN 23
WHT/BRN 24
NCA 25
WHT/GRY 26
WHT/GRY/YEL 27
BLU/VIO 28
BRN/RED 29
BRN/BLK/YEL 30
BRN/GRN/YEL 31
NCA NCA
RED (OR YEL) NCA
LEFT FRONT ABS SPEED SENSOR
NCA NCA
YEL NCA
RIGHT FRONT ABS SPEED SENSOR
NCA NCA
WHT NCA
LEFT REAR ABS SPEED SENSOR
NCA NCA
GRN NCA
RIGHT REAR ABS SPEED SENSOR
WHT/YEL 15
WHT/VIO 20
BLU/BLK
BLU/GRY
** G203 (RIGHT KICK PANEL)
G106 * (LEFT FRONT OF ENG COMPT)
DATA LINK CONNECTOR (REAR OF ENGINE COMPARTMENT)
ABS BRAKE PEDAL TRAVEL SENSOR (NEAR BRAKE FLUID RESERVOIR) **
SLIP CONTROL MODULE (ABS) (RIGHT SIDE OF DASH, BEHIND GLOVE BOX)
81831

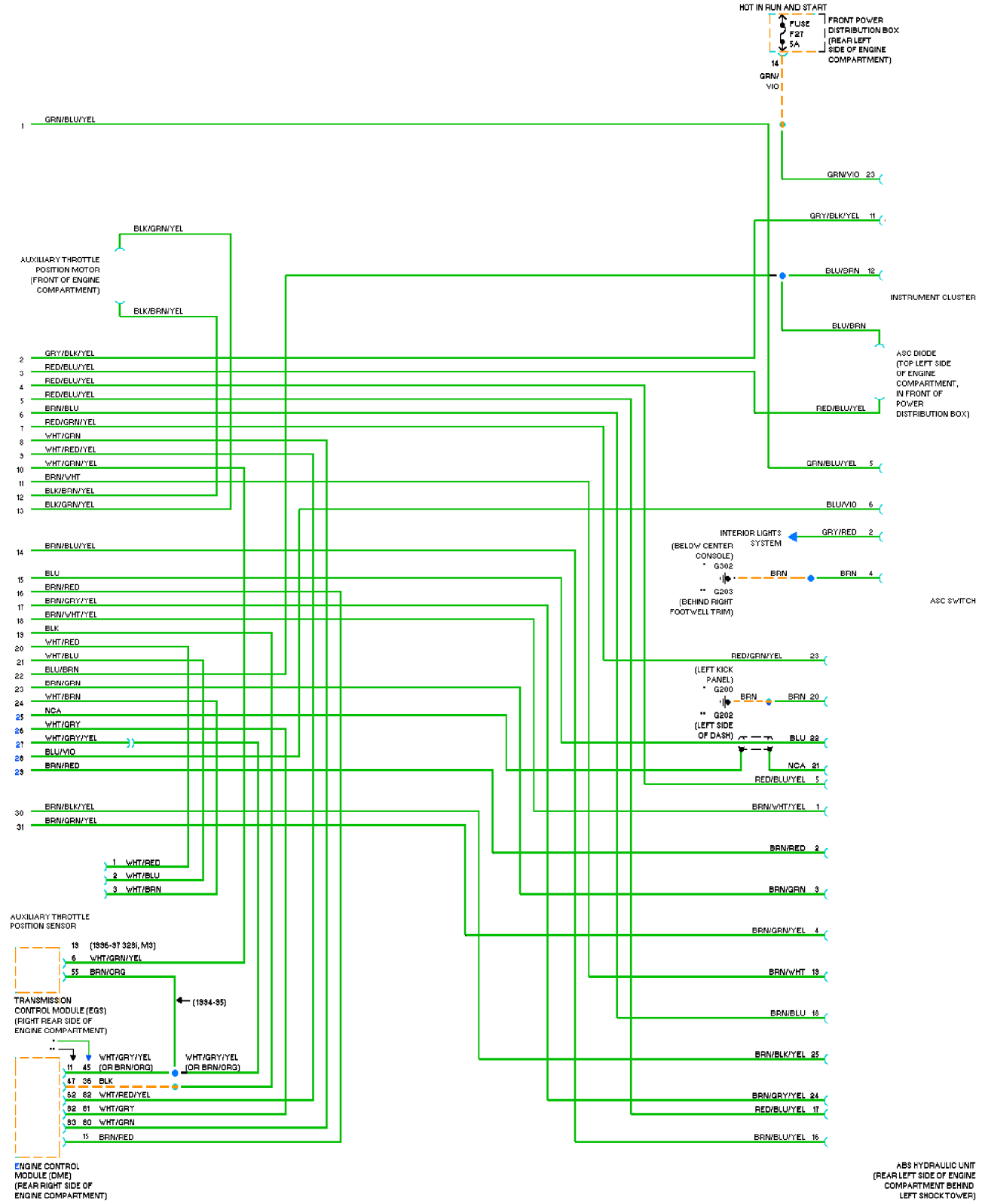
HOT IN RUN AND START
FUSE F27 5A
FRONT POWER DISTRIBUTION BOX (REAR LEFT SIDE OF ENGINE COMPARTMENT)
14 GRN/VIO
1 GRN/BLU/YEL
GRN/VIO 23
GRY/BLK/YEL 11
BLU/BRN 12
INSTRUMENT CLUSTER
BLU/BRN
ASC DIODE (TOP LEFT SIDE OF ENGINE COMPARTMENT, IN FRONT OF POWER DISTRIBUTION BOX)
RED/BLU/YEL
GRN/BLU/YEL 5
BLU/VIO 6
BLK/GRN/YEL
BLK/BRN/YEL
AUXILIARY THROTTLE POSITION MOTOR (FRONT OF ENGINE COMPARTMENT)
2 GRY/BLK/YEL
3 RED/BLU/YEL
4 RED/BLU/YEL
5 RED/BLU/YEL
6 BRN/BLU
7 RED/GRN/YEL
8 WHT/GRN
9 WHT/RED/YEL
10 WHT/GRN/YEL
11 BRN/WHT
12 BLK/BRN/YEL
13 BLK/GRN/YEL
INTERIOR LIGHTS SYSTEM
GRY/RED 2
(BELOW CENTER CONSOLE)
* G302
** G203 (BEHIND RIGHT FOOTWELL TRIM)
BRN
BRN 4
ASC SWITCH
14 BRN/BLU/YEL
15 BLU
16 BRN/RED
17 BRN/GRY/YEL
18 BRN/WHT/YEL
19 BLK
20 WHT/RED
21 WHT/BLU
22 BLU/BRN
23 BRN/GRN
24 WHT/BRN
25 NCA
26 WHT/GRY
27 WHT/GRY/YEL
28 BLU/VIO
29 BRN/RED
RED/GRN/YEL 23
(LEFT KICK PANEL)
* G200
** G202 (LEFT SIDE OF DASH)
BRN
BRN 20
BLU 22
NCA 21
RED/BLU/YEL 5
30 BRN/BLK/YEL
31 BRN/GRN/YEL
BRN/WHT/YEL 1
BRN/RED 2
BRN/GRN 3
BRN/GRN/YEL 4
BRN/WHT 13
BRN/BLU 18
BRN/BLK/YEL 25
BRN/GRY/YEL 24
RED/BLU/YEL 17
BRN/BLU/YEL 16
1 WHT/RED
2 WHT/BLU
3 WHT/BRN
AUXILIARY THROTTLE POSITION SENSOR
19 (1996-97 328i, M3)
6 WHT/GRN/YEL
55 BRN/ORG
(1994-95)
TRANSMISSION CONTROL MODULE (EGS) (RIGHT REAR SIDE OF ENGINE COMPARTMENT)
*
**
11 45 WHT/GRY/YEL (OR BRN/ORG)
WHT/GRY/YEL (OR BRN/ORG)
47 36 BLK
52 82 WHT/RED/YEL
52 81 WHT/GRY
53 80 WHT/GRN
15 BRN/RED
ENGINE CONTROL MODULE (DME) (REAR RIGHT SIDE OF ENGINE COMPARTMENT)
ABS HYDRAULIC UNIT (REAR LEFT SIDE OF ENGINE COMPARTMENT BEHIND LEFT SHOCK TOWER)
81832

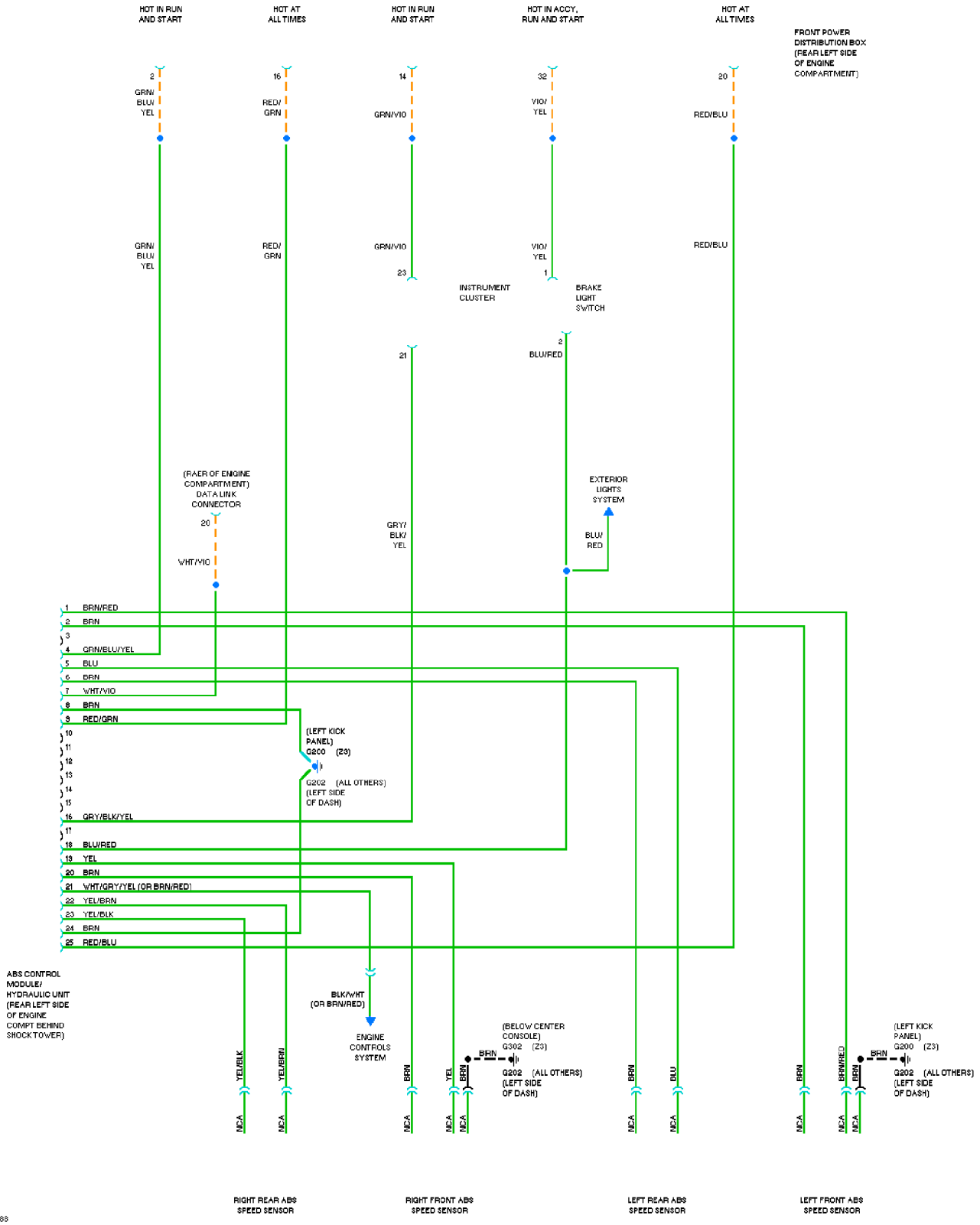
HOT IN RUN AND START
HOT AT ALL TIMES
HOT IN RUN AND START
HOT IN ACCY, RUN AND START
HOT AT ALL TIMES
FRONT POWER DISTRIBUTION BOX (REAR LEFT SIDE OF ENGINE COMPARTMENT)
2
GRN/BLU/YEL
16
RED/GRN
14
GRN/VIO
32
VIO/YEL
20
RED/BLU
GRN/BLU/YEL
RED/GRN
GRN/VIO
23
VIO/YEL
1
RED/BLU
INSTRUMENT CLUSTER
BRAKE LIGHT SWITCH
21
2
BLU/RED
(RAER OF ENGINE COMPARTMENT) DATA LINK CONNECTOR
20
VHT/VIO
GRY/BLK/YEL
EXTERIOR LIGHTS SYSTEM
BLU/RED
1 BRN/RED
2 BRN
3
4 GRN/BLU/YEL
5 BLU
6 BRN
7 VHT/VIO
8 BRN
9 RED/GRN
10
11
12
13
14
15
16 GRY/BLK/YEL
17
18 BLU/RED
19 YEL
20 BRN
21 VHT/GRY/YEL (OR BRN/RED)
22 YEL/BRN
23 YEL/BLK
24 BRN
25 RED/BLU
(LEFT KICK PANEL) G200 (23)
G202 (ALL OTHERS) (LEFT SIDE OF DASH)
ABS CONTROL MODULE/ HYDRAULIC UNIT (REAR LEFT SIDE OF ENGINE COMPT BEHIND SHOCKTOWER)
BLK/WHT (OR BRN/RED)
ENGINE CONTROLS SYSTEM
(BELOW CENTER CONSOLE) G302 (23)
BRN
G202 (ALL OTHERS) (LEFT SIDE OF DASH)
(LEFT KICK PANEL) G200 (23)
BRN
G202 (ALL OTHERS) (LEFT SIDE OF DASH)
YEL/BLK
YEL/BRN
BRN
YEL
BRN
BRN
BLU
BRN
BRN/RED
BRN
MCA
RIGHT REAR ABS SPEED SENSOR
RIGHT FRONT ABS SPEED SENSOR
LEFT REAR ABS SPEED SENSOR
LEFT FRONT ABS SPEED SENSOR

93368

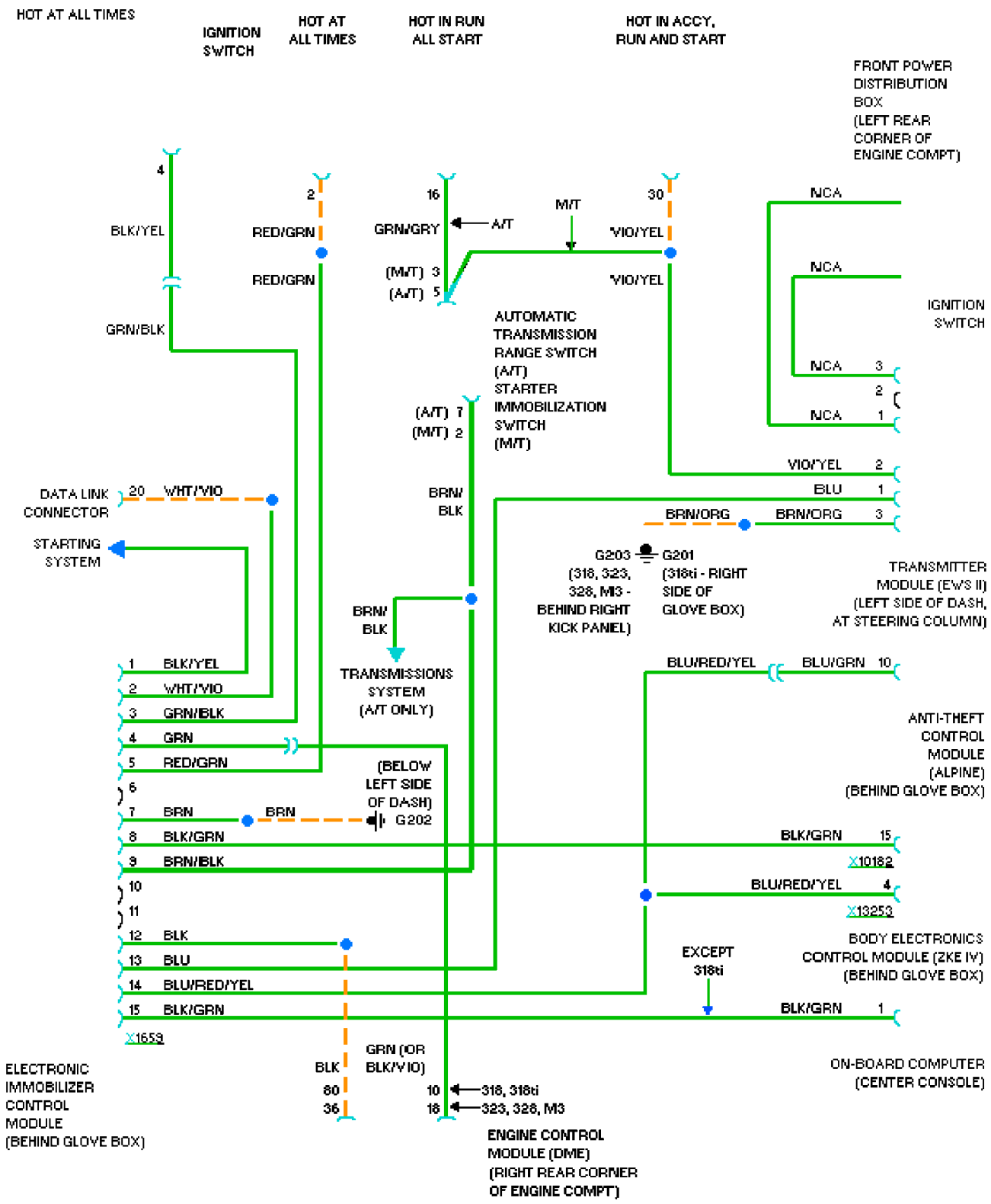
HOT AT ALL TIMES
IGNITION SWITCH
HOT AT ALL TIMES
HOT IN RUN ALL START
HOT IN ACCY, RUN AND START
FRONT POWER DISTRIBUTION BOX (LEFT REAR CORNER OF ENGINE COMPT)
4
BLK/YEL
GRN/BLK
2
RED/GRN
RED/GRN
16
GRN/GRY
A/T
(M/T) 3
(A/T) 5
M/T
30
VIO/YEL
VIO/YEL
NCA
NCA
NCA 3
2
NCA 1
IGNITION SWITCH
AUTOMATIC TRANSMISSION RANGE SWITCH (A/T)
STARTER IMMOBILIZATION SWITCH (M/T)
(A/T) 7
(M/T) 2
VIO/YEL 2
BLU 1
BRN/ORG
BRN/ORG 3
DATA LINK CONNECTOR
20 WHT/VIO
BRN/ BLK
STARTING SYSTEM
G203 (318, 323, 328, M3 - BEHIND RIGHT KICK PANEL)
G201 (318ti - RIGHT SIDE OF GLOVE BOX)
TRANSMITTER MODULE (EWS II) (LEFT SIDE OF DASH, AT STEERING COLUMN)
BRN/ BLK
TRANSMISSIONS SYSTEM (A/T ONLY)
1 BLK/YEL
2 WHT/VIO
3 GRN/BLK
4 GRN
5 RED/GRN
6
7 BRN
BRN
(BELOW LEFT SIDE OF DASH) G202
8 BLK/GRN
9 BRN/BLK
10
11
12 BLK
13 BLU
14 BLU/RED/YEL
15 BLK/GRN
X1653
BLU/RED/YEL
BLU/GRN 10
ANTI-THEFT CONTROL MODULE (ALPINE) (BEHIND GLOVE BOX)
BLK/GRN 15
X10182
BLU/RED/YEL 4
X13253
EXCEPT 318ti
BODY ELECTRONICS CONTROL MODULE (ZKE IV) (BEHIND GLOVE BOX)
BLK/GRN 1
ELECTRONIC IMMOBILIZER CONTROL MODULE (BEHIND GLOVE BOX)
BLK
80
36
GRN (OR BLK/VIO)
10 318, 318ti
18 323, 328, M3
ENGINE CONTROL MODULE (DME) (RIGHT REAR CORNER OF ENGINE COMPT)
ON-BOARD COMPUTER (CENTER CONSOLE)
93583