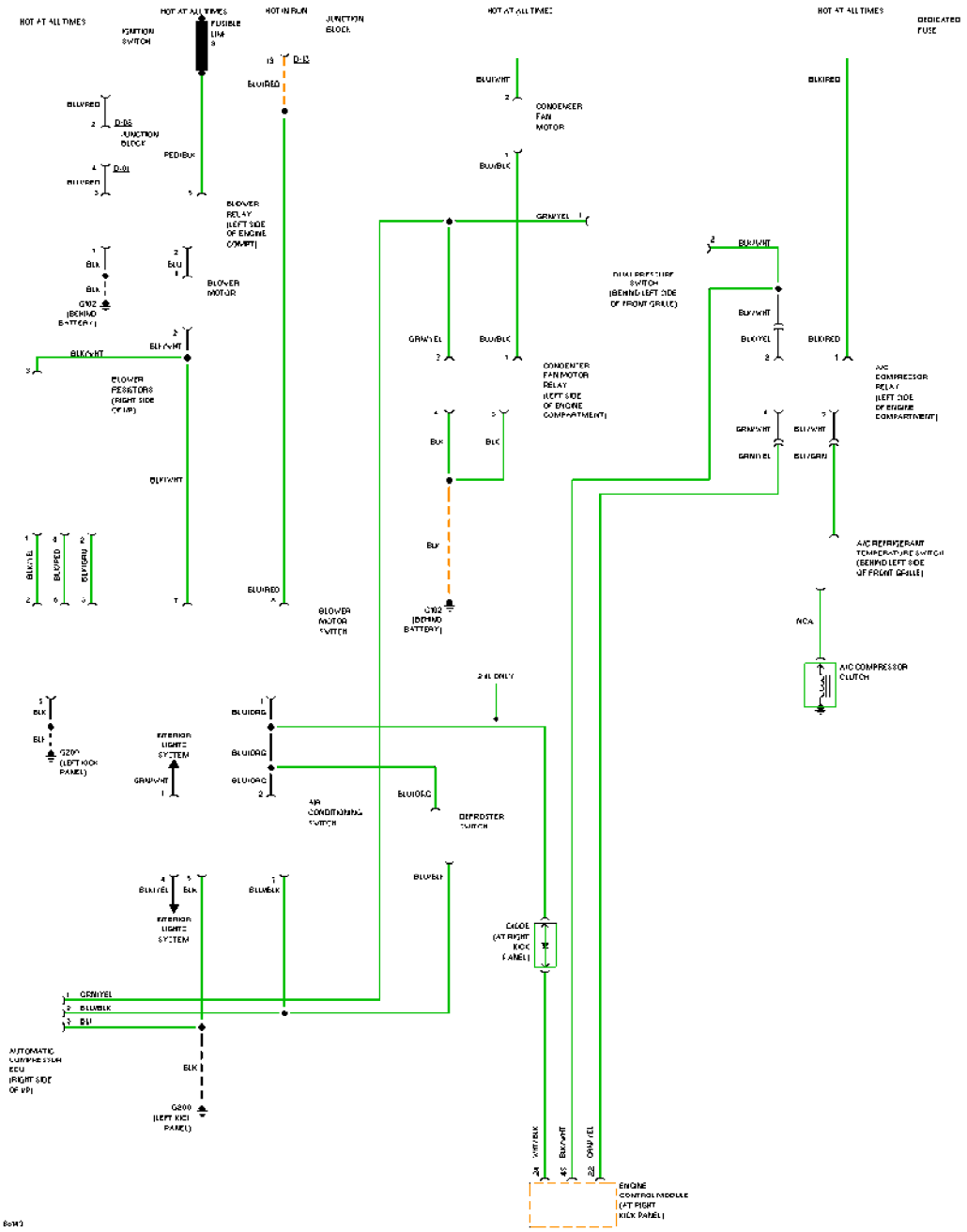
HOT AT ALL TIMES
HOT AT ALL TIMES
IGNITION SWITCH
FUSIBLE LINK
HOT IN RUN
JUNCTION BLOCK
HOT AT ALL TIMES
HOT AT ALL TIMES
DEDICATED FUSE
BLU/RED
D-05
JUNCTION BLOCK
PED/BLK
D-01
BLOWER RELAY (LEFT SIDE OF ENGINE COMPT)
BLOWER MOTOR
G302 (BEHIND BATTERY)
BLK/WHT
BLOWER RESISTORS (RIGHT SIDE OF VP)
BLK/YEL
BLK/RED
BLU/GRN
BLU/WHT
BLU/RED
BLOWER MOTOR SWITCH
BLU/ORG
INTERIOR LIGHTS SYSTEM
GRN/WHT
G200 (LEFT KICK PANEL)
AIR CONDITIONING SWITCH
BLU/ORG
DEFROSTER SWITCH
BLU/BLK
BLU/BLK
INTERIOR LIGHTS SYSTEM
GRN/YEL
BLU/BLK
BLU
AUTOMATIC COMPRESSOR ECU (RIGHT SIDE OF VP)
BLK
G200 (LEFT KICK PANEL)
BLU/WHT
CONDENSER FAN MOTOR
BLU/BLK
GRN/YEL
GRN/YEL
BLU/BLK
CONDENSER FAN MOTOR RELAY (LEFT SIDE OF ENGINE COMPARTMENT)
BLK
BLK
BLU
G302 (BEHIND BATTERY)
2 AL ONLY
C400E (AT RIGHT KICK PANEL)
BLU/BLK
BLU/WHT
GRN/YEL
ENGINE CONTROL MODULE (AT RIGHT KICK PANEL)
BLU/WHT
DUAL PRESSURE SWITCH (BEHIND LEFT SIDE OF FRONT GRILLE)
BLU/WHT
BLK/YEL
BLK/RED
AIC COMPRESSOR RELAY (LEFT SIDE OF ENGINE COMPARTMENT)
GRN/WHT
GRN/YEL
BLU/WHT
BLU/GRN
AIC REFRIGERANT TEMPERATURE SWITCH (BEHIND LEFT SIDE OF FRONT GRILLE)
NCA
AIC COMPRESSOR CLUTCH

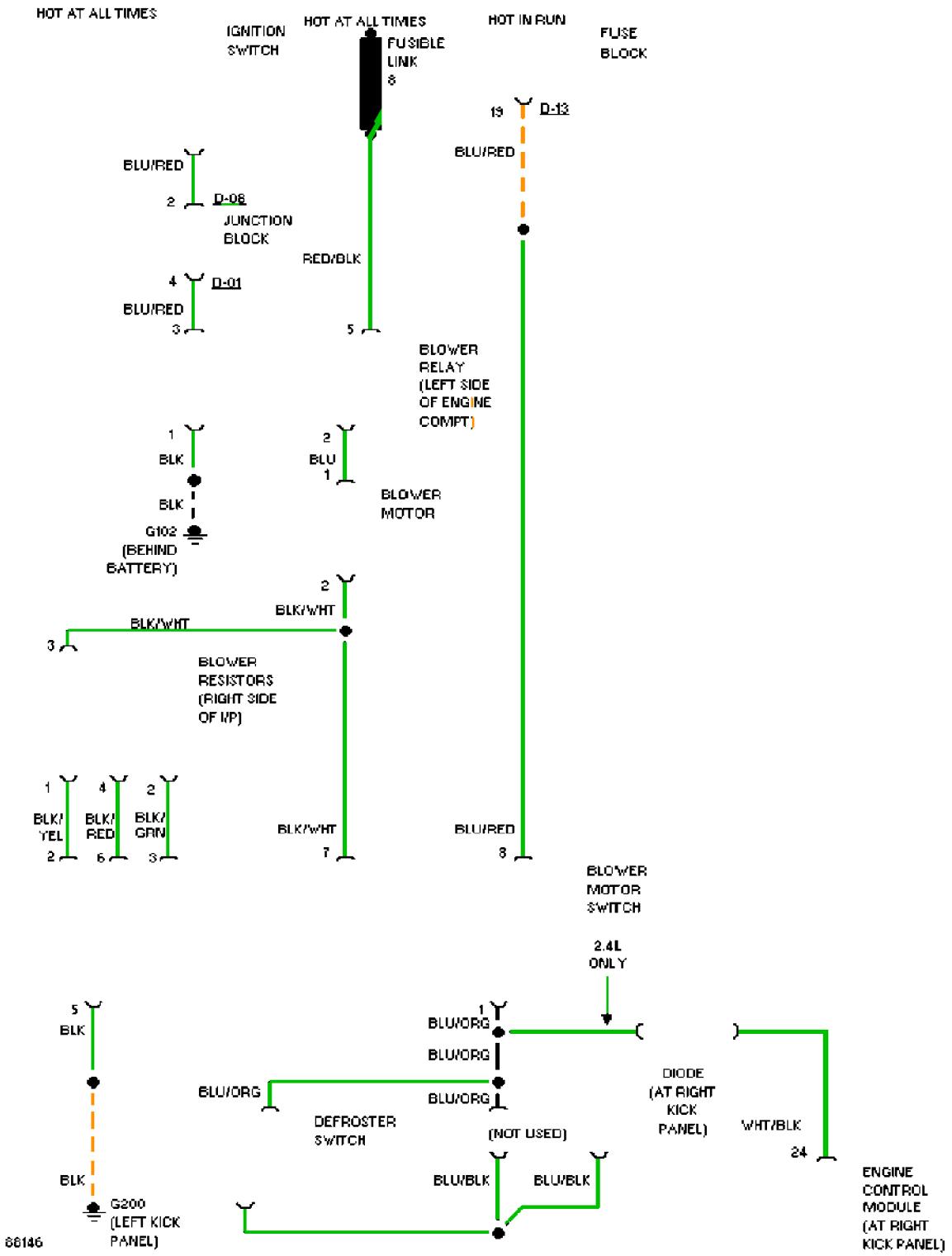
HOT AT ALL TIMES
IGNITION SWITCH
HOT AT ALL TIMES
FUSIBLE LINK 8
HOT IN RUN
FUSE BLOCK
19
D-13
BLU/RED
BLU/RED
2
D-08
JUNCTION BLOCK
RED/BLK
4
D-01
BLU/RED
3
5
BLOWER RELAY (LEFT SIDE OF ENGINE COMPT)
1
BLK
2
BLU
1
BLOWER MOTOR
BLK
G102 (BEHIND BATTERY)
2
BLK/WHT
BLK/WHT
3
BLOWER RESISTORS (RIGHT SIDE OF I/P)
1
BLK/ YEL
2
4
BLK/ RED
6
2
BLK/ GRN
3
BLK/WHT
7
BLU/RED
8
BLOWER MOTOR SWITCH
2.4L ONLY
5
BLK
BLK
G200 (LEFT KICK PANEL)
1
BLU/ORG
BLU/ORG
BLU/ORG
BLU/ORG
DEFROSTER SWITCH
(NOT USED)
BLU/BLK
BLU/BLK
DIODE (AT RIGHT KICK PANEL)
WHT/BLK
24
ENGINE CONTROL MODULE (AT RIGHT KICK PANEL)
86146

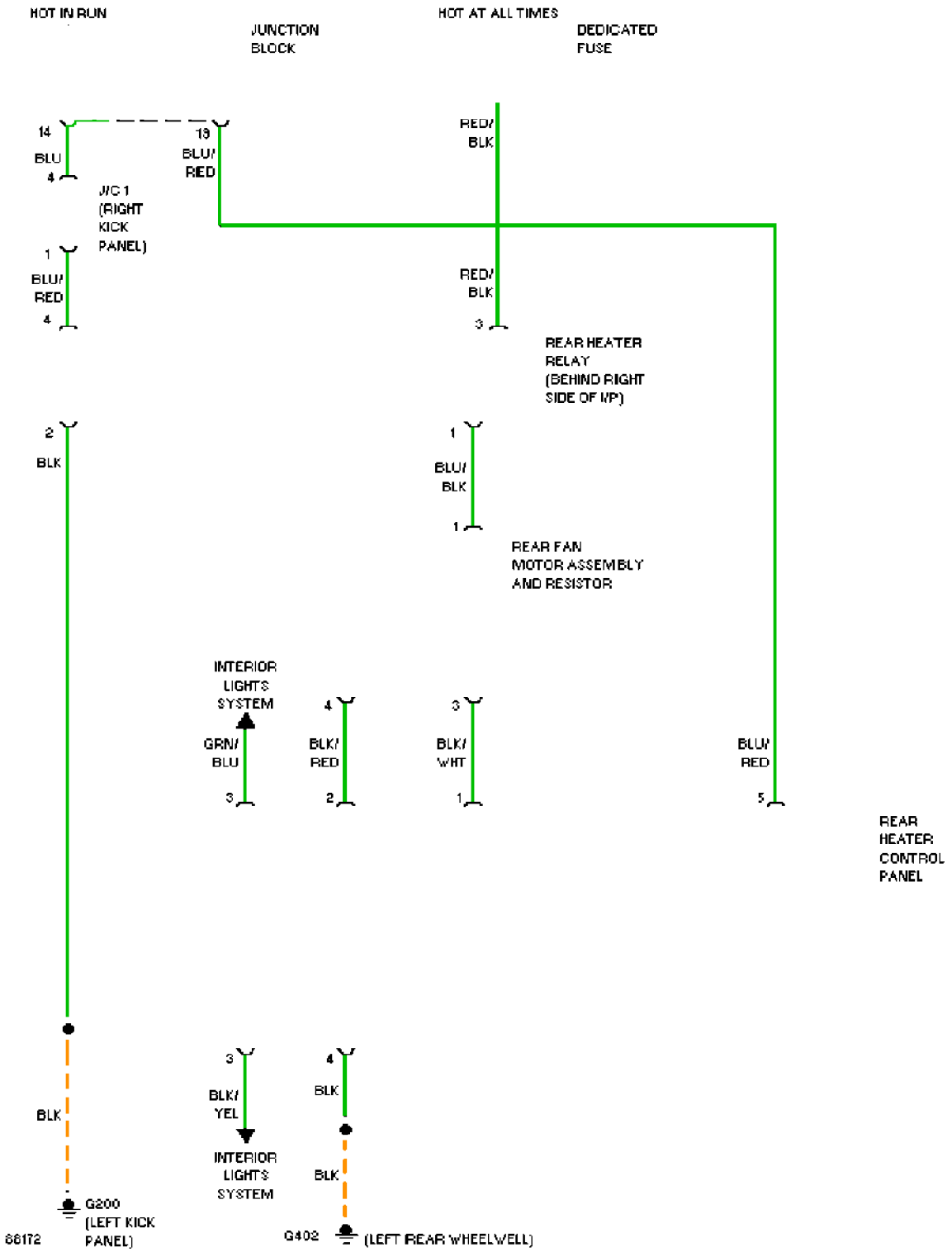
HOT IN RUN
JUNCTION BLOCK
HOT AT ALL TIMES
DEDICATED FUSE
14
BLU
4
13
BLU/ RED
RED/ BLK
JC 1 (RIGHT KICK PANEL)
1
BLU/ RED
4
RED/ BLK
3
REAR HEATER RELAY (BEHIND RIGHT SIDE OF I/P)
2
BLK
1
BLU/ BLK
1
REAR FAN MOTOR ASSEMBLY AND RESISTOR
INTERIOR LIGHTS SYSTEM
GRN/ BLU
3
4
BLK/ RED
2
3
BLK/ WHT
1
BLU/ RED
5
REAR HEATER CONTROL PANEL
BLK
G200 (LEFT KICK PANEL)
86172
3
BLK/ YEL
INTERIOR LIGHTS SYSTEM
4
BLK
BLK
G402
(LEFT REAR WHEELWELL)

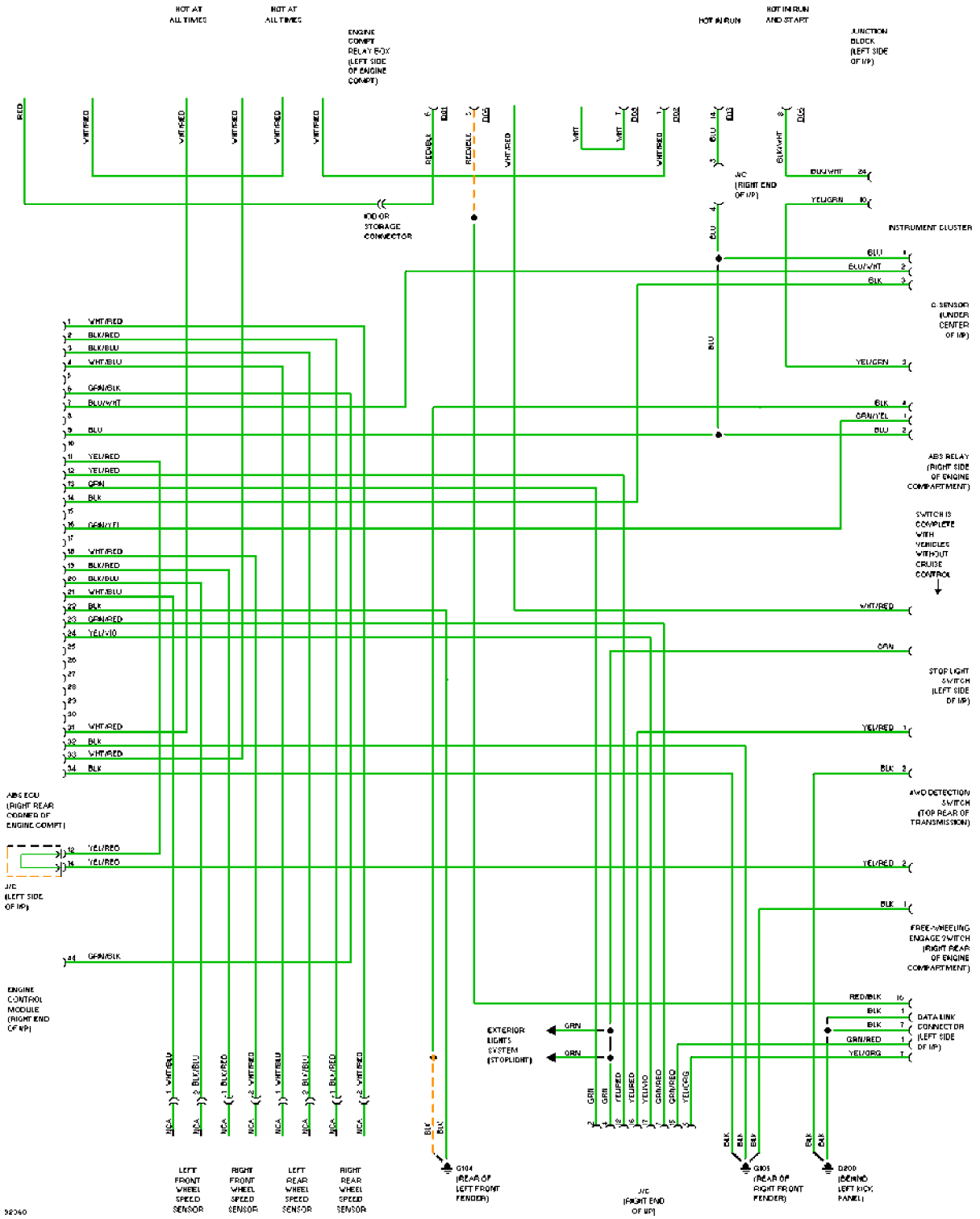
HOT AT ALL TIMES
HOT AT ALL TIMES
ENGINE COMPT RELAY BOX (LEFT SIDE OF ENGINE COMPT)
HOT IN RUN
HOT IN RUN AND START
JUNCTION BLOCK (LEFT SIDE OF I/P)
RED
WHT/RED
WHT/RED
WHT/RED
WHT/RED
WHT/RED
RED/BLK
RED/BLU
WHT/RED
WHT
WHT
WHT/RED
BLU
BLK/WHT
BLU/WHT 24
J/C (RIGHT END OF I/P)
YEL/GRN 10
KOO OR STORAGE CONNECTOR
INSTRUMENT CLUSTER
BLU 1
BLU/WHT 2
BLK 3
O2 SENSOR (UNDER CENTER OF I/P)
YEL/GRN 3
BLK 4
GRN/YEL 1
BLU 2
ABS RELAY (RIGHT SIDE OF ENGINE COMPARTMENT)
SWITCH IS COMPLETE WITH VEHICLES WITHOUT CRUISE CONTROL
WHT/RED
GRN
STOP LIGHT SWITCH (LEFT SIDE OF I/P)
YEL/RED 1
BLK 2
4WD DETECTION SWITCH (TOP REAR OF TRANSMISSION)
YEL/RED 2
BLK 1
FREE-WHEELING ENGAGE SWITCH (RIGHT REAR OF ENGINE COMPARTMENT)
1 WHT/RED
2 BLK/RED
3 BLK/BLU
4 WHT/BLU
5
6 GRN/BLK
7 BLU/WHT
8
9 BLU
10
11 YEL/RED
12 YEL/RED
13 GRN
14 BLK
15
16 GRN/YEL
17
18 WHT/RED
19 BLK/RED
20 BLK/BLU
21 WHT/BLU
22 BLK
23 GRN/RED
24 YEL/VIO
25
26
27
28
29
30
31 WHT/RED
32 BLK
33 WHT/RED
34 BLK
ABS ECU (RIGHT REAR CORNER OF ENGINE COMPT)
32 YEL/RED
34 YEL/RED
J/C (LEFT SIDE OF I/P)
44 GRN/BLK
ENGINE CONTROL MODULE (RIGHT END OF I/P)
RED/BLK 16
BLK 1
BLK 7
GRN/RED 1
YEL/ORG 7
DATA LINK CONNECTOR (LEFT SIDE OF I/P)
EXTERIOR LIGHTS SYSTEM (STOPLIGHT)
GRN
GRN
1 WHT/BLU
2 BLK/BLU
1 BLK/RED
2 WHT/RED
1 WHT/BLU
2 BLK/BLU
1 BLK/RED
2 WHT/RED
BLK
BLK
GRN
GRN
YEL/RED
YEL/RED
YEL/VIO
GRN/RED
GRN/RED
YEL/ORG
BLK
BLK
BLK
BLK
BLK
BLK
G104 (REAR OF LEFT FRONT FENDER)
G105 (REAR OF RIGHT FRONT FENDER)
D200 (BEHIND LEFT KICK PANEL)
LEFT FRONT WHEEL SPEED SENSOR
RIGHT FRONT WHEEL SPEED SENSOR
LEFT REAR WHEEL SPEED SENSOR
RIGHT REAR WHEEL SPEED SENSOR
J/C (RIGHT END OF I/P)
92060

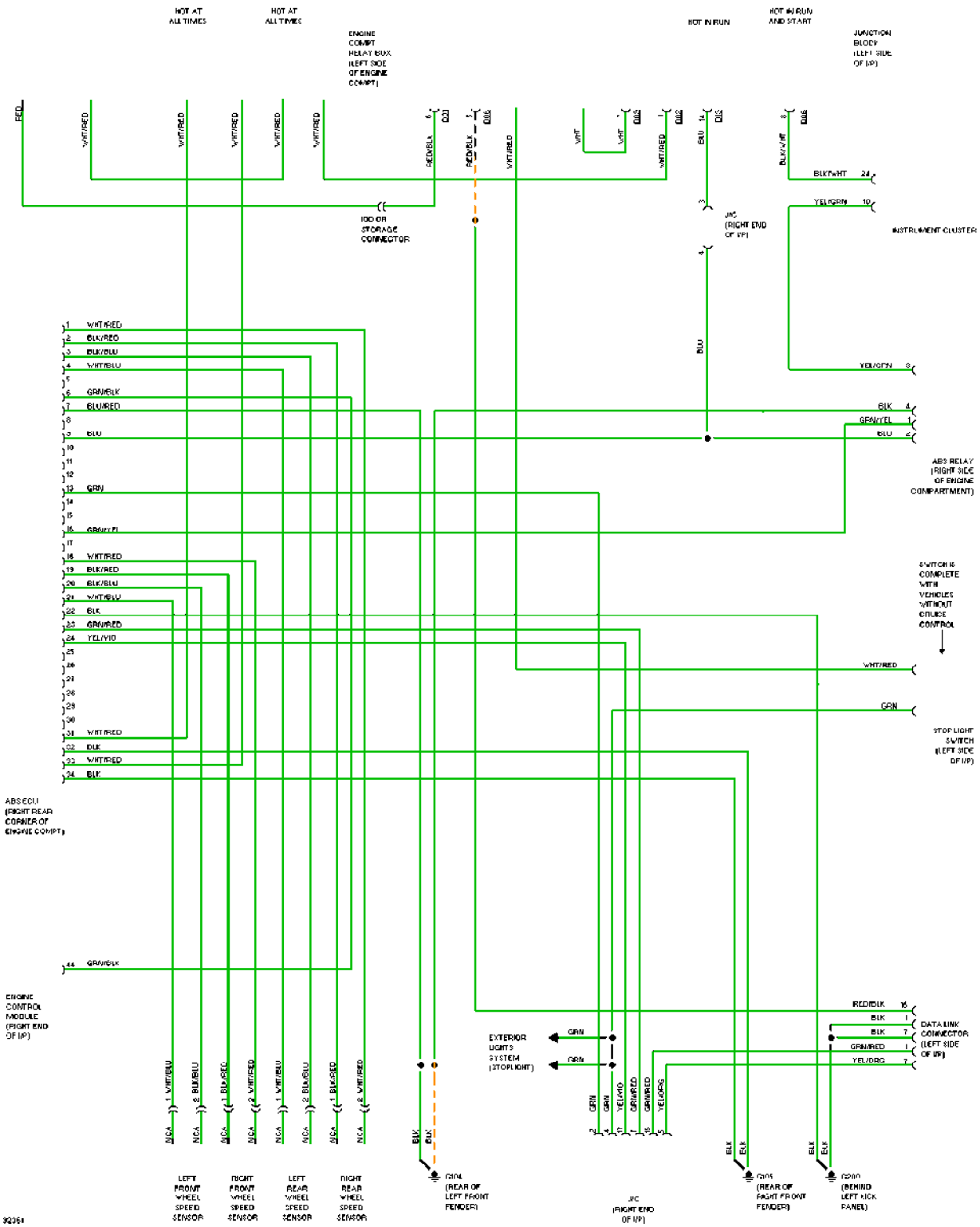
HOT AT ALL TIMES
HOT AT ALL TIMES
ENGINE COMPT RELAY BOX (LEFT SIDE OF ENGINE COMPT)
HOT IN RUN
HOT IN RUN AND START
JUNCTION BLOCK (LEFT SIDE OF I/P)
RED
WHT/RED
WHT/RED
WHT/RED
WHT/RED
WHT/RED
RED/BLK
RED/BLK
WHT/RED
WHT
WHT
WHT/RED
BLU
BLK/WHT
BLK/WHT 24
YEL/GRN 10
100 OR STORAGE CONNECTOR
J/C (RIGHT END OF I/P)
INSTRUMENT CLUSTER
BLU
YEL/GRN 8
1 WHT/RED
2 BLK/RED
3 BLK/BLU
4 WHT/BLU
5
6 GRN/BLK
7 BLU/RED
8
9 BLU
10
11
12
13 GRN
14
15
16 GRN/YEL
17
18 WHT/RED
19 BLK/RED
20 BLK/BLU
21 WHT/BLU
22 BLK
23 GRN/RED
24 YEL/VIO
25
26
27
28
29
30
31 WHT/RED
32 BLK
33 WHT/RED
34 BLK
BLK 4
GRN/YEL 1
BLU 6
ABS RELAY (RIGHT SIDE OF ENGINE COMPARTMENT)
SWITCH IS COMPLETE WITH VEHICLES WITHOUT CRUISE CONTROL
WHT/RED
GRN
STOP LIGHT SWITCH (LEFT SIDE OF I/P)
ABS ECU (RIGHT REAR CORNER OF ENGINE COMPT)
44 GRN/BLK
ENGINE CONTROL MODULE (RIGHT END OF I/P)
RED/BLK 16
BLK 1
BLK 7
GRN/RED 1
YEL/DRG 7
DATA LINK CONNECTOR (LEFT SIDE OF I/P)
EXTERIOR LIGHTS SYSTEM (STOP LIGHT)
GRN
GRN
N/CA 1 WHT/BLU
N/CA 2 BLK/BLU
N/CA 1 BLK/RED
N/CA 2 WHT/RED
N/CA 1 WHT/BLU
N/CA 2 BLK/BLU
N/CA 1 BLK/RED
N/CA 2 WHT/RED
BLK
BLK
GRN
GRN
YEL/VIO
GRN/RED
GRN/RED
YEL/DRG
BLK
BLK
BLK
BLK
LEFT FRONT WHEEL SPEED SENSOR
RIGHT FRONT WHEEL SPEED SENSOR
LEFT REAR WHEEL SPEED SENSOR
RIGHT REAR WHEEL SPEED SENSOR
G104 (REAR OF LEFT FRONT FENDER)
J/C (RIGHT END OF I/P)
G205 (REAR OF RIGHT FRONT FENDER)
G200 (BEHIND LEFT KICK PANEL)
92361