Page	Description
1	Table of Contents
2	Vehicle Controller Layout
3	Active Suspension
4	Audio - LHD
5	Audio - Microphones
6	Audio - Premium Amp
7	Audio - RHD
8	Braking and Stability
9	Braking and Stability - Wheel Speed Sensors
10	CAN - Chassis
11	CAN - Party
12	CAN - Vehicle
13	Center Console
14	Charge Port Inlet
15	Diagnostics
16	Door - Front Left
17	Door - Front Right
18	Door - Rear Left
19	Door - Rear Right
20	Drive Inverters - Power and Comms
21	Driver Inverters - Resolvers and Pedals
22	Driver Assistance - LHD
23	Driver Assistance - RHD
24	Frunk Actuators / Sensors
25	Grounding - Cabin
26	Grounding - Frunk
27	Grounding - Trunk
28	Headliner
29	HV Battery and HVIL
30	HV Penthouse - PCS
31	HVAC - Cabin
32	HVAC - Case Subassembly
33	HVAC - Heat Pump
34	HVAC - Powertrain
35	Instrument Panel
36	Liftgate Actuators / Sensors
37	Lights Exterior
38	LIN
39	Power Distribution - Main
40	Power Distribution - VCFront 1/2
41	Power Distribution - VCFront 2/2
42	Power Distribution - VCLeft 1/2
43	Power Distribution - VCLeft 2/2
44	Power Distribution - VCRight 1/3
45	Power Distribution - VCRight 2/3
46	Power Distribution - VCRight 3/3
47	Restraints Control Module - Airbags
48	Restraints Control Module - Seatbelts
49	Restraints Control Module - Sensors
50	RF/Special Cables - LHD
51	RF/Special Cables - RHD
52	Seats - 1R Left
53	Seats - 1R Right
54	Seats - 2R
55	Security Controls
56	Steering
57	Towing Interface

Table 1: Abbreviations

LF	Left Front	RF	Right Front
LR	Left Rear	RR	Right Rear
LHST	Left-Hand Side	RHST	Right-Hand Side

Table 2: Harness Designators

Des	Name	Harness Part Number Base
A	LH Body	2897315-XX-X
B	RH Body	1897316-XX-X
C	Center Console	1897340-XX-X
CE	Center Console Extention	1743022-XX-X
D	Front Door Left	1897321-XX-X
DT	Front Door Trim	1764461-XX-X
F	Front Fascia	2897318-XX-X
G	Rear Fascia	1897319-XX-X
H	HV Penthouse	1732579-XX-X
HVAC	HVAC Case	1547266-XX-X
J	IP	1897343-XX-X(LHD)/ 1897344-XX-X(RHD)
JTL	IP Trim Left	1768837-XX-X
JTR	IP Trim Right	1768838-XX-X
K	Headliner	1897345-XX-X
L	FEM	1897320-XX-X
N	F Subframe	1489051-XX-X
P	Front Door Right	1897322-XX-X
Q	Parcel Shelf	1897346-XX-X
R	Rear Door Left	1897323-XX-X
RT	Rear Door Trim	1764463-XX-X
S	Rear Door Right	1897324-XX-X
T	Liftgate	1897325-XX-X
UHP	Thermal Bar, Heat Pump	1068767-XX-X
V	Glass	1897317-XX-X
W	Frunk	2897330-XX-X
X	Rear Subframe	1897329-XX-X
Y	1R Seat	1897333-XX-X
Z	B2B Jumper	1806516-00-X
	Chassis Pigtail LF	1344763-00-X
	Chassis Pigtail RF	1344764-00-X
	Chassis Pigtail LR	1344783-00-X
	Chassis Pigtail RR	1344784-00-X

Table 3: Wire Color Designators

BK	Black	RD	Red
BN	Brown	TN	Tan
BU	Blue	VT	Violet (Purple)
GN	Green	WH	White
GY	Gray	YE	Yellow
OG	Orange		

Table 4: Wire Type Designators

FLRY	Thin wall 105C rated, regular stranded PVC insulated [FLRY-A]
FLRB	Thin wall 105C rated, bunched conductor PVC insulated [FLRY-B]
MCIV	Thin wall 105C rated, compressed conductor PVC (halogen free) insulated
XR15	Thin wall 150C rated, cross-linked polyolefin, high flexible
FLXB	Thin wall 125C rated, cross-linked polyolefin, high flexible, halogen free insulated
3TBL	Thick wall 105C rated, aluminum conductor PVC insulated
F91X	Thin wall 150C rated, cross-linked polyethylene, high flexible

Table 5: Option Codes

LHST	Left Side Seat or Trim
RHST	Right Side Seat or Trim
PCOLM	Power Steering Column
PAUDIO	Premium Audio
LHD	Left Hand Drive
RHD	Right Hand Drive
AWD	All Wheel Drive
RWD	Rear Wheel Drive
PMIRR	Premium Mirror with Powerfold
REEU	Region Europe
RENA	Region North America
ASUSP	Active Suspension
CSUSP	Coil Suspension
SBR	Seat Belt Reminder Switch
OCS	Occupant Classification System
STPS	Seat Track Position Sensor
DISP	Rear Display
CPGB	Charge Port China
AVAB	Active Vent Airbag
KAB	Knee Airbag
FSAB	Far Side Airbag
PPRO	Pedestrian Protection
ALR	Automatic Locking Retractor
PINLT	Premium Interior Lighting
TWTR	Tweeter
ICR	Interior Cabin Radar
FCM	Fascia Camera
TOW	Trailer
LMBR	Lumbar
LMBR2	Integrated Lumbar
HEAT	Second Row Heat Pad Cushion

General Notes:
1) Switches [Relays] are shown in their inactive [de-energized] state.
2) Splices may be split across pages for visual clarity with respect to the function displayed on the particular page.
3) Some connectors are split across multiple pages for clarity.
There is no overall reference in this document for the signals routed to a specific connector.
4) Wire sizes are specified in mm^2 cross-sectional area (CSA) per SAE 112778
5) Wire Specification: 60V, thin-wall PVC (ISO type or equivalent).
Default wire type to be rated 60VDC/25VAC and -40C to 105C operating temperature.
See DIN 13602 or ISO 6722 for detailed specifications.
6) Unless otherwise specified at the device pins, terminal plating is to be Tin or Pre-Tin

TERMINAL PLATING

○ GOLD TERMINAL NECESSARY

□ SILVER PLATING NECESSARY

7) Inline connector gender specification is based on the terminal type.
Inline connectors with "M" suffix have male, tab or pin terminals
Inline connectors with "F" suffix have female, receptacle or socket terminals

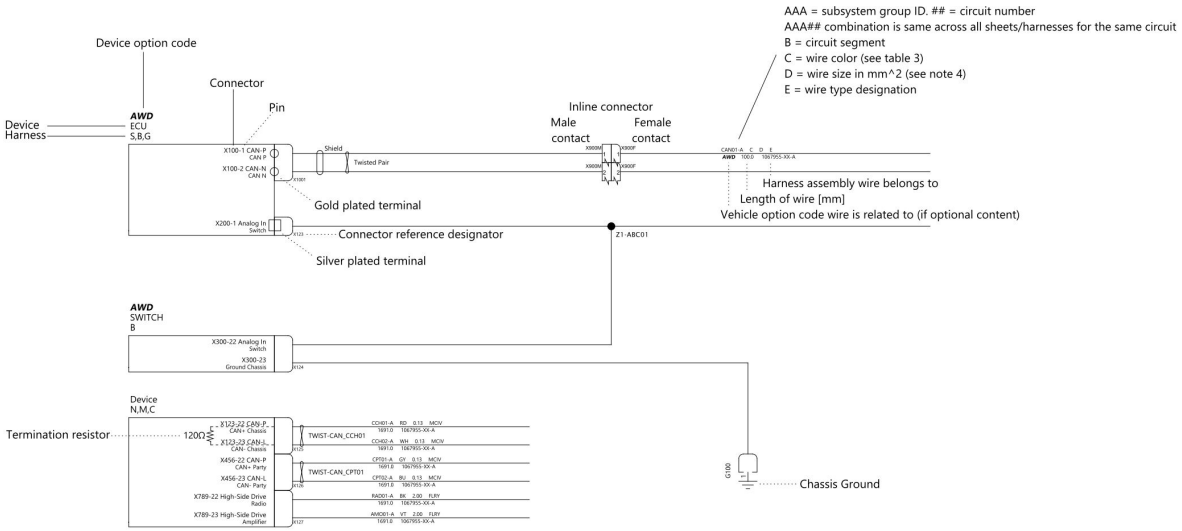

TESLA

THE INFORMATION CONTAINED HEREIN IS DEEMED TO BE CONFIDENTIAL, PROPRIETARY, AND A TRADE SECRET OF TESLA MOTORS. T NOT BE USED, REPRODUCED, OR DISCLOSED AS THE DIRECT OR INDIRECT BASIS FOR THE DEVELOPMENT, MANUFACTURE, OR SALE PRODUCTS WITHOUT THE EXPRESSO WRITTEN CONSENT OF TESLA MOTORS.

PROGRAM	RELEASED
Model 3 SOP9	Oct 2025
NAME	SHEET
Table of Content	1 OF 57

Left Controller

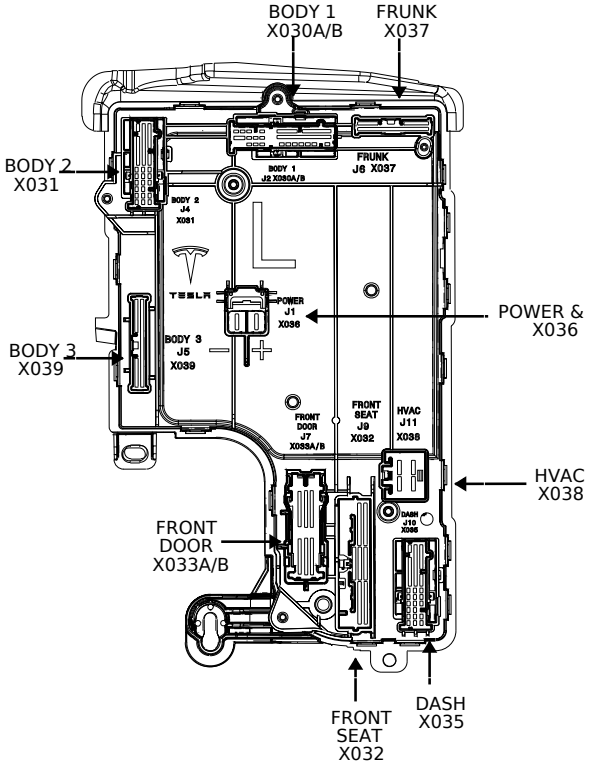

Front Controller

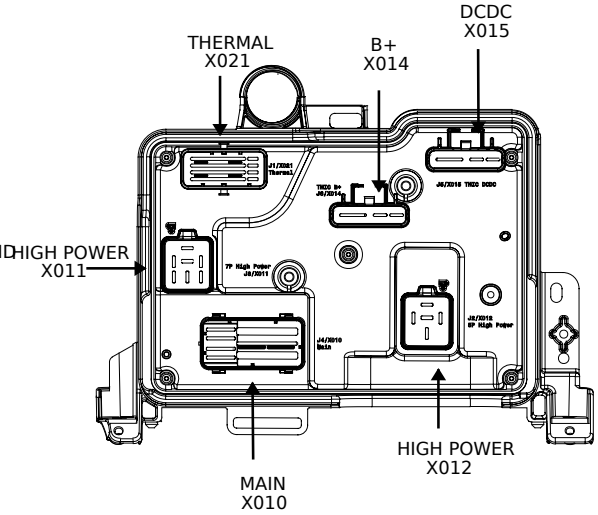

Right Controller

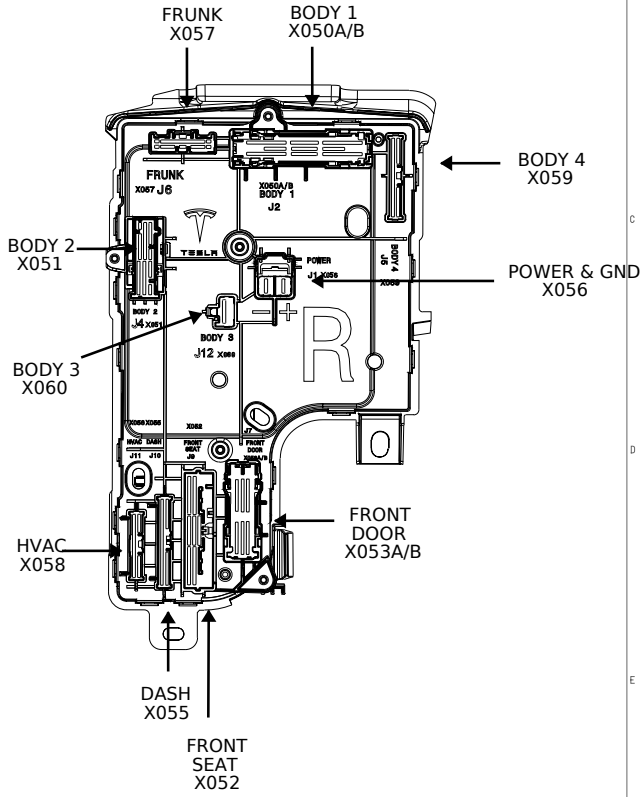

TESLA

THE INFORMATION CONTAINED HEREIN IS DEEMED TO BE CONFIDENTIAL, PROPRIETARY, AND A TRADE SECRET OF TESLA MOTORS. T
NOT BE USED, REPRODUCED, OR DISCLOSED AS THE DIRECT OR INDIRECT BASIS FOR THE DEVELOPMENT, MANUFACTURE, OR SALE
PRODUCTS WITHOUT THE EXPRESSO WRITTEN CONSENT OF TESLA MOTORS.

PROGRAM Model 3 SOP9	RELEASED Oct 2025
NAME Controller Layout	SHEET 2 OF 57

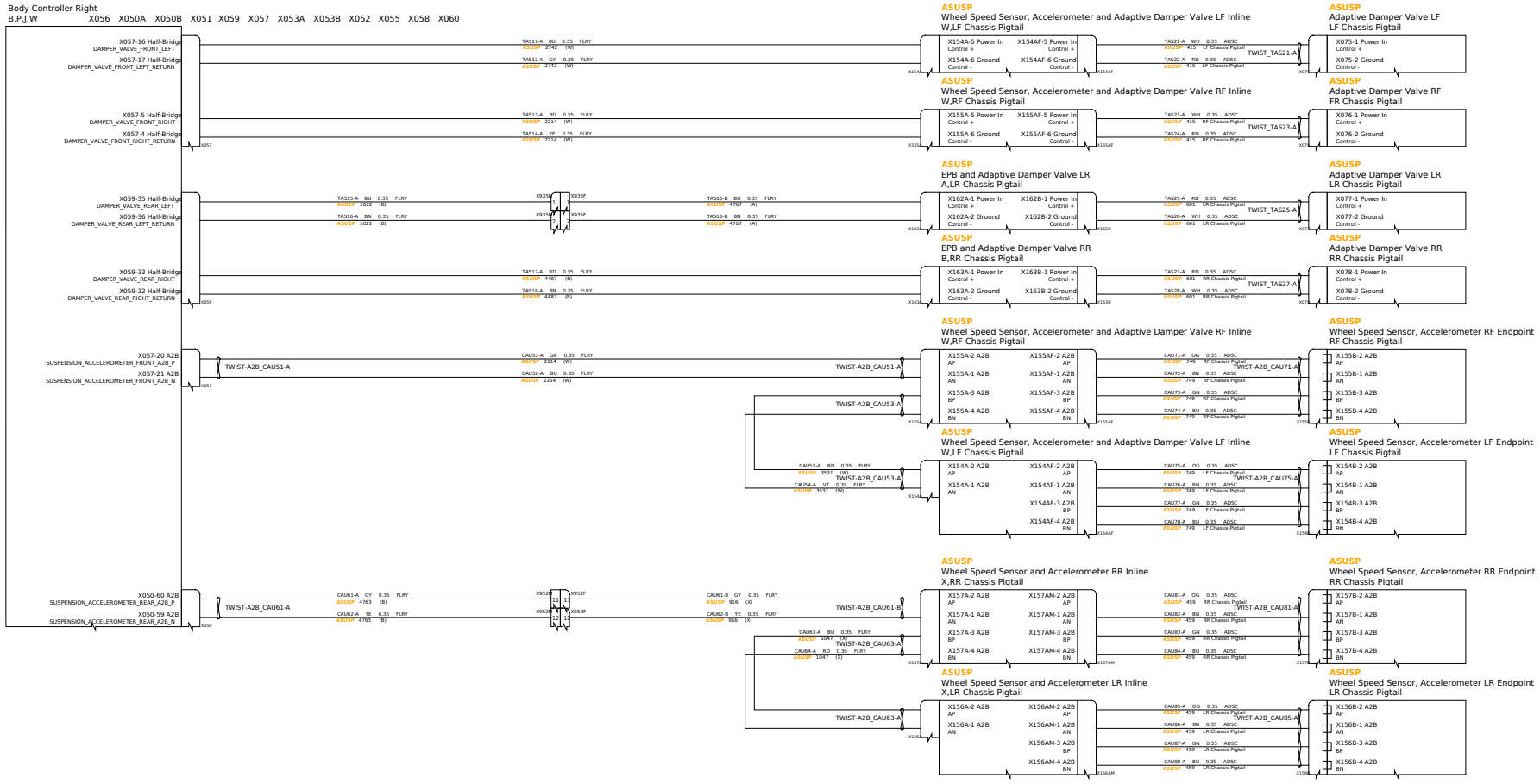

TESLA

THE INFORMATION CONTAINED HEREIN IS DEEMED TO BE CONFIDENTIAL, PROPRIETARY, AND A TRADE SECRET OF TESLA MOTORS. T
NOT BE USED, REPRODUCED, OR DISCLOSED AS THE DIRECT OR INDIRECT BASIS FOR THE DEVELOPMENT, MANUFACTURE, OR SALE
PRODUCTS WITHOUT THE EXPRESSO WRITTEN CONSENT OF TESLA MOTORS.

PROGRAM	RELEASED
Model 3 SOP9	Oct 2025
NAME	SHEET
Active Suspension	3 OF 57

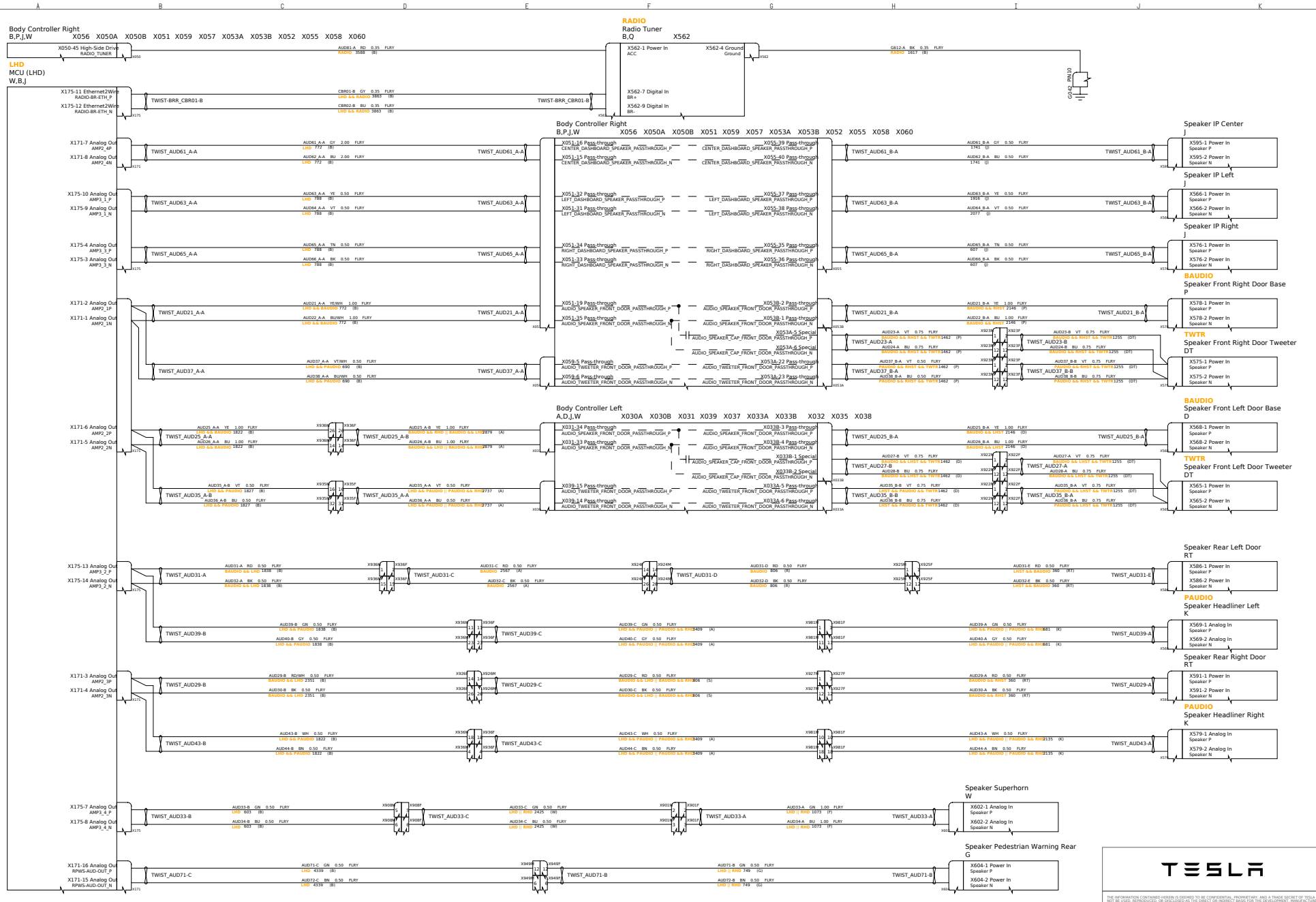
Body Controller Right
B,P,J,W
X056 X050A X050B X051 X059 X057 X053A X053B X052 X055 X058 X060
X050-45 High-Side Drive
RADIO_TUNER
RADIO
Radio Tuner
B,Q
X562
X562-1 Power In
ACC
X562-4 Ground
Ground
X562-7 Digital In
BR+
X562-9 Digital In
BR-
G612-A BK 0.35 FLRY
RADIO 1817 (B)
G012 PM10
LHD
MCU (LHD)
W,B,J
X175-11 Ethernet2Wire
RADIO-BR-ETH_P
X175-12 Ethernet2Wire
RADIO-BR-ETH_N
TWIST-BRR_CBR01-B
CBR01-B GY 0.35 FLRY
LHD && RADIO 3863 (B)
CBR02-B BU 0.35 FLRY
LHD && RADIO 3863 (B)
X171-7 Analog Out
AMP2_4P
X171-8 Analog Out
AMP2_4N
TWIST_AUD61_A-A
AUD61_A-A GY 2.00 FLRY
LHD 772 (B)
AUD62_A-A BU 2.00 FLRY
LHD 772 (B)
X051-16 Pass-through
CENTER_DASHBOARD_SPEAKER_PASSTHROUGH_P
X051-15 Pass-through
CENTER_DASHBOARD_SPEAKER_PASSTHROUGH_N
X055-39 Pass-through
CENTER_DASHBOARD_SPEAKER_PASSTHROUGH_P
X055-40 Pass-through
CENTER_DASHBOARD_SPEAKER_PASSTHROUGH_N
TWIST_AUD61_B-A
AUD61_B-A GY 0.50 FLRY
1741 (J)
AUD62_B-A BU 0.50 FLRY
1741 (J)
Speaker IP Center
J
X595-1 Power In
Speaker P
X595-2 Power In
Speaker N
X175-10 Analog Out
AMP3_1_P
X175-9 Analog Out
AMP3_1_N
TWIST_AUD63_A-A
AUD63_A-A YE 0.50 FLRY
LHD 788 (B)
AUD64_A-A VT 0.50 FLRY
LHD 788 (B)
X051-32 Pass-through
LEFT_DASHBOARD_SPEAKER_PASSTHROUGH_P
X051-31 Pass-through
LEFT_DASHBOARD_SPEAKER_PASSTHROUGH_N
X055-37 Pass-through
LEFT_DASHBOARD_SPEAKER_PASSTHROUGH_P
X055-38 Pass-through
LEFT_DASHBOARD_SPEAKER_PASSTHROUGH_N
TWIST_AUD63_B-A
AUD63_B-A YE 0.50 FLRY
1916 (J)
AUD64_B-A VT 0.50 FLRY
2077 (J)
Speaker IP Left
J
X566-1 Power In
Speaker P
X566-2 Power In
Speaker N
X175-4 Analog Out
AMP3_3_P
X175-3 Analog Out
AMP3_3_N
TWIST_AUD65_A-A
AUD65_A-A TN 0.50 FLRY
LHD 788 (B)
AUD66_A-A BK 0.50 FLRY
LHD 788 (B)
X051-34 Pass-through
RIGHT_DASHBOARD_SPEAKER_PASSTHROUGH_P
X051-33 Pass-through
RIGHT_DASHBOARD_SPEAKER_PASSTHROUGH_N
X055-35 Pass-through
RIGHT_DASHBOARD_SPEAKER_PASSTHROUGH_P
X055-36 Pass-through
RIGHT_DASHBOARD_SPEAKER_PASSTHROUGH_N
TWIST_AUD65_B-A
AUD65_B-A TN 0.50 FLRY
607 (J)
AUD66_B-A BK 0.50 FLRY
607 (J)
Speaker IP Right
J
X576-1 Power In
Speaker P
X576-2 Power In
Speaker N
BAUDIO
Speaker Front Right Door Base
P
X171-2 Analog Out
AMP2_1P
X171-1 Analog Out
AMP2_1N
TWIST_AUD21_A-A
AUD21_A-A YE/WH 1.00 FLRY
LHD && BAUDIO 772 (B)
AUD22_A-A BU/WH 1.00 FLRY
LHD && BAUDIO 772 (B)
X051-19 Pass-through
AUDIO_SPEAKER_FRONT_DOOR_PASSTHROUGH_P
X051-35 Pass-through
AUDIO_SPEAKER_FRONT_DOOR_PASSTHROUGH_N
X053B-2 Pass-through
AUDIO_SPEAKER_FRONT_DOOR_PASSTHROUGH_P
X053B-1 Pass-through
AUDIO_SPEAKER_FRONT_DOOR_PASSTHROUGH_N
X053A-5 Special
AUDIO_SPEAKER_CAP_FRONT_DOOR_PASSTHROUGH_P
X053A-6 Special
AUDIO_SPEAKER_CAP_FRONT_DOOR_PASSTHROUGH_N
TWIST_AUD21_B-A
AUD21_B-A YE 1.00 FLRY
BAUDIO && RHST 2146 (P)
AUD22_B-A BU 1.00 FLRY
BAUDIO && RHST 2146 (P)
TWIST_AUD23-A
AUD23-A VT 0.75 FLRY
BAUDIO && RHST && TWTR 1462 (P)
AUD24-A BU 0.75 FLRY
BAUDIO && RHST && TWTR 1462 (P)
TWIST_AUD23-B
AUD23-B VT 0.75 FLRY
BAUDIO && RHST && TWTR 1255 (DT)
AUD24-B BU 0.75 FLRY
BAUDIO && RHST && TWTR 1255 (DT)
TWTR
Speaker Front Right Door Tweeter
DT
X578-1 Power In
Speaker P
X578-2 Power In
Speaker N
TWIST_AUD37_A-A
AUD37_A-A VT/WH 0.50 FLRY
LHD && PAUDIO 690 (B)
AUD38_A-A BU/WH 0.50 FLRY
LHD && PAUDIO 690 (B)
X059-5 Pass-through
AUDIO_TWEETER_FRONT_DOOR_PASSTHROUGH_P
X059-6 Pass-through
AUDIO_TWEETER_FRONT_DOOR_PASSTHROUGH_N
X053A-22 Pass-through
AUDIO_TWEETER_FRONT_DOOR_PASSTHROUGH_P
X053A-23 Pass-through
AUDIO_TWEETER_FRONT_DOOR_PASSTHROUGH_N
TWIST_AUD37_B-A
AUD37_B-A VT 0.50 FLRY
PAUDIO && RHST && TWTR 1462 (P)
AUD38_B-A BU 0.50 FLRY
PAUDIO && RHST && TWTR 1462 (P)
TWIST_AUD37_B-B
AUD37_B-B VT 0.75 FLRY
PAUDIO && RHST && TWTR 1255 (DT)
AUD38_B-B BU 0.75 FLRY
PAUDIO && RHST && TWTR 1255 (DT)
X575-1 Power In
Speaker P
X575-2 Power In
Speaker N
Body Controller Left
A,D,J,W
X030A X030B X031 X039 X037 X033A X033B X032 X035 X038
BAUDIO
Speaker Front Left Door Base
D
X171-6 Analog Out
AMP2_2P
X171-5 Analog Out
AMP2_2N
TWIST_AUD25_A-A
AUD25_A-A YE 1.00 FLRY
LHD && BAUDIO 1822 (B)
AUD26_A-A BU 1.00 FLRY
LHD && BAUDIO 1822 (B)
X936H X936F
X936H X936F
TWIST_AUD25_A-B
AUD25_A-B YE 1.00 FLRY
BAUDIO && RHD || BAUDIO && RHD 2879 (A)
AUD26_A-B BU 1.00 FLRY
BAUDIO && LHD || BAUDIO && RHD 2879 (A)
X031-34 Pass-through
AUDIO_SPEAKER_FRONT_DOOR_PASSTHROUGH_P
X031-33 Pass-through
AUDIO_SPEAKER_FRONT_DOOR_PASSTHROUGH_N
X033B-3 Pass-through
AUDIO_SPEAKER_FRONT_DOOR_PASSTHROUGH_P
X033B-4 Pass-through
AUDIO_SPEAKER_FRONT_DOOR_PASSTHROUGH_N
X033B-1 Special
AUDIO_SPEAKER_CAP_FRONT_DOOR_PASSTHROUGH_P
X033B-2 Special
AUDIO_SPEAKER_CAP_FRONT_DOOR_PASSTHROUGH_N
TWIST_AUD25_B-A
AUD25_B-A YE 1.00 FLRY
BAUDIO && LHST 2146 (D)
AUD26_B-A BU 1.00 FLRY
BAUDIO && LHST 2146 (D)
TWIST_AUD27-B
AUD27-B VT 0.75 FLRY
BAUDIO && LHST && TWTR 1462 (D)
AUD28-B BU 0.75 FLRY
BAUDIO && LHST && TWTR 1462 (D)
TWIST_AUD27-A
AUD27-A VT 0.75 FLRY
BAUDIO && LHST && TWTR 1255 (DT)
AUD28-A BU 0.75 FLRY
BAUDIO && LHST && TWTR 1255 (DT)
TWTR
Speaker Front Left Door Tweeter
DT
X568-1 Power In
Speaker P
X568-2 Power In
Speaker N
TWIST_AUD35_A-B
AUD35_A-B VT 0.50 FLRY
LHD && PAUDIO 1827 (B)
AUD36_A-B BU 0.50 FLRY
LHD && PAUDIO 1827 (B)
X935H X935F
X935H X935F
TWIST_AUD35_A-A
AUD35_A-A VT 0.50 FLRY
LHD && PAUDIO || PAUDIO && RHD 2737 (A)
AUD36_A-A BU 0.50 FLRY
LHD && PAUDIO || PAUDIO && RHD 2737 (A)
X039-15 Pass-through
AUDIO_TWEETER_FRONT_DOOR_PASSTHROUGH_P
X039-14 Pass-through
AUDIO_TWEETER_FRONT_DOOR_PASSTHROUGH_N
X033A-5 Pass-through
AUDIO_TWEETER_FRONT_DOOR_PASSTHROUGH_P
X033A-6 Pass-through
AUDIO_TWEETER_FRONT_DOOR_PASSTHROUGH_N
TWIST_AUD35_B-B
AUD35_B-B VT 0.75 FLRY
LHST && PAUDIO && TWTR 1462 (D)
AUD36_B-B BU 0.75 FLRY
LHST && PAUDIO && TWTR 1462 (D)
TWIST_AUD35_B-A
AUD35_B-A VT 0.75 FLRY
PAUDIO && LHST && TWTR 1255 (DT)
AUD36_B-A BU 0.75 FLRY
PAUDIO && LHST && TWTR 1255 (DT)
X565-1 Power In
Speaker P
X565-2 Power In
Speaker N
Speaker Rear Left Door
RT
X175-13 Analog Out
AMP3_2_P
X175-14 Analog Out
AMP3_2_N
TWIST_AUD31-A
AUD31-A RD 0.50 FLRY
BAUDIO && LHD 1838 (B)
AUD32-A BK 0.50 FLRY
BAUDIO && LHD 1838 (B)
X936H X936F
X936H X936F
TWIST_AUD31-C
AUD31-C RD 0.50 FLRY
BAUDIO 2567 (A)
AUD32-C BK 0.50 FLRY
BAUDIO 2567 (A)
X924H X924F
X924H X924F
TWIST_AUD31-D
AUD31-D RD 0.50 FLRY
BAUDIO 806 (R)
AUD32-D BK 0.50 FLRY
BAUDIO 806 (R)
X925H X925F
X925H X925F
TWIST_AUD31-E
AUD31-E RD 0.50 FLRY
LHST && BAUDIO 360 (RT)
AUD32-E BK 0.50 FLRY
LHST && BAUDIO 360 (RT)
X586-1 Power In
Speaker P
X586-2 Power In
Speaker N
PAUDIO
Speaker Headliner Left
K
TWIST_AUD39-B
AUD39-B GN 0.50 FLRY
LHD && PAUDIO 1838 (B)
AUD40-B GY 0.50 FLRY
LHD && PAUDIO 1838 (B)
X936H X936F
X936H X936F
TWIST_AUD39-C
AUD39-C GN 0.50 FLRY
LHD && PAUDIO || PAUDIO && RHD 3409 (A)
AUD40-C GY 0.50 FLRY
LHD && PAUDIO || PAUDIO && RHD 3409 (A)
X981H X981F
X981H X981F
TWIST_AUD39-A
AUD39-A GN 0.50 FLRY
LHD && PAUDIO || PAUDIO && RHD 881 (K)
AUD40-A GY 0.50 FLRY
LHD && PAUDIO || PAUDIO && RHD 881 (K)
X569-1 Analog In
Speaker P
X569-2 Analog In
Speaker N
Speaker Rear Right Door
RT
X171-3 Analog Out
AMP2_3P
X171-4 Analog Out
AMP2_3N
TWIST_AUD29-B
AUD29-B RD/WH 0.50 FLRY
BAUDIO && LHD 2351 (B)
AUD30-B BK 0.50 FLRY
BAUDIO && LHD 2351 (B)
X926H X926M
X926H X926M
TWIST_AUD29-C
AUD29-C RD 0.50 FLRY
BAUDIO && LHD || BAUDIO && RHD 806 (S)
AUD30-C BK 0.50 FLRY
BAUDIO && LHD || BAUDIO && RHD 806 (S)
X927H X927F
X927H X927F
TWIST_AUD29-A
AUD29-A RD 0.50 FLRY
BAUDIO && RHST 360 (RT)
AUD30-A BK 0.50 FLRY
BAUDIO && RHST 360 (RT)
X591-1 Power In
Speaker P
X591-2 Power In
Speaker N
PAUDIO
Speaker Headliner Right
K
TWIST_AUD43-B
AUD43-B WH 0.50 FLRY
LHD && PAUDIO 1822 (B)
AUD44-B BN 0.50 FLRY
LHD && PAUDIO 1822 (B)
X936H X936F
X936H X936F
TWIST_AUD43-C
AUD43-C WH 0.50 FLRY
LHD && PAUDIO || PAUDIO && RHD 3409 (A)
AUD44-C BN 0.50 FLRY
LHD && PAUDIO || PAUDIO && RHD 3409 (A)
X981H X981F
X981H X981F
TWIST_AUD43-A
AUD43-A WH 0.50 FLRY
LHD && PAUDIO || PAUDIO && RHD 2135 (K)
AUD44-A BN 0.50 FLRY
LHD && PAUDIO || PAUDIO && RHD 2135 (K)
X579-1 Analog In
Speaker P
X579-2 Analog In
Speaker N
Speaker Superhorn
W
X175-7 Analog Out
AMP3_4_P
X175-8 Analog Out
AMP3_4_N
TWIST_AUD33-B
AUD33-B GN 0.50 FLRY
LHD 603 (B)
AUD34-B BU 0.50 FLRY
LHD 603 (B)
X908F X908F
X908F X908F
TWIST_AUD33-C
AUD33-C GN 0.50 FLRY
LHD || RHD 2425 (W)
AUD34-C BU 0.50 FLRY
LHD || RHD 2425 (W)
X901F X901F
X901F X901F
TWIST_AUD33-A
AUD33-A GN 1.00 FLRY
LHD || RHD 1073 (F)
AUD34-A BU 1.00 FLRY
LHD || RHD 1073 (F)
TWIST_AUD33-A
X602-1 Analog In
Speaker P
X602-2 Analog In
Speaker N
Speaker Pedestrian Warning Rear
G
X171-16 Analog Out
RPWS-AUD-OUT_P
X171-15 Analog Out
RPWS-AUD-OUT_N
TWIST_AUD71-C
AUD71-C GN 0.50 FLRY
LHD 4339 (B)
AUD72-C BN 0.50 FLRY
LHD 4339 (B)
X949H X949F
X949H X949F
TWIST_AUD71-B
AUD71-B GN 0.50 FLRY
LHD || RHD 749 (G)
AUD72-B BN 0.50 FLRY
LHD || RHD 749 (G)
TWIST_AUD71-B
X604-1 Power In
Speaker P
X604-2 Power In
Speaker N
TESLA
THE INFORMATION CONTAINED HEREIN IS DEEMED TO BE CONFIDENTIAL, PROPRIETARY, AND A TRADE SECRET OF TESLA MOTORS. T
NOT BE USED, REPRODUCED, OR DISCLOSED AS THE DIRECT OR INDIRECT BASIS FOR THE DEVELOPMENT, MANUFACTURE, OR SALE
PRODUCTS WITHOUT THE EXPRESSO WRITTEN CONSENT OF TESLA MOTORS.
PROGRAM
Model 3 SOP9
RELEASED
Oct 2025
NAME
Audio - LHD
SHEET
4 OF 57

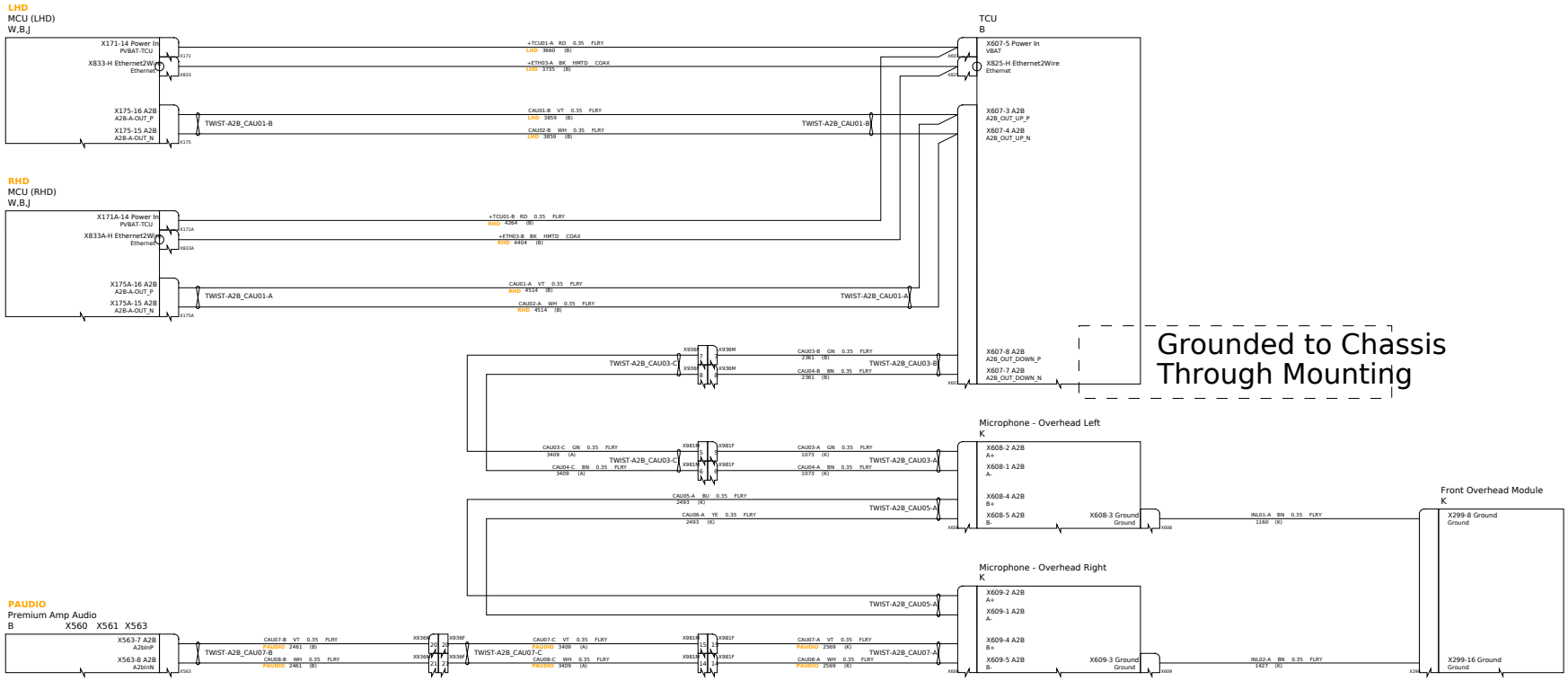

TESLA

THE INFORMATION CONTAINED HEREIN IS DEEMED TO BE CONFIDENTIAL, PROPRIETARY, AND A TRADE SECRET OF TESLA MOTORS. T
NOT BE USED, REPRODUCED, OR DISCLOSED AS THE DIRECT OR INDIRECT BASIS FOR THE DEVELOPMENT, MANUFACTURE, OR SALE
PRODUCTS WITHOUT THE EXPRESSO WRITTEN CONSENT OF TESLA MOTORS.

PROGRAM	RELEASED
Model 3 SOP9	Oct 2025
NAME	SHEET
Audio - Microphones	5 OF 57

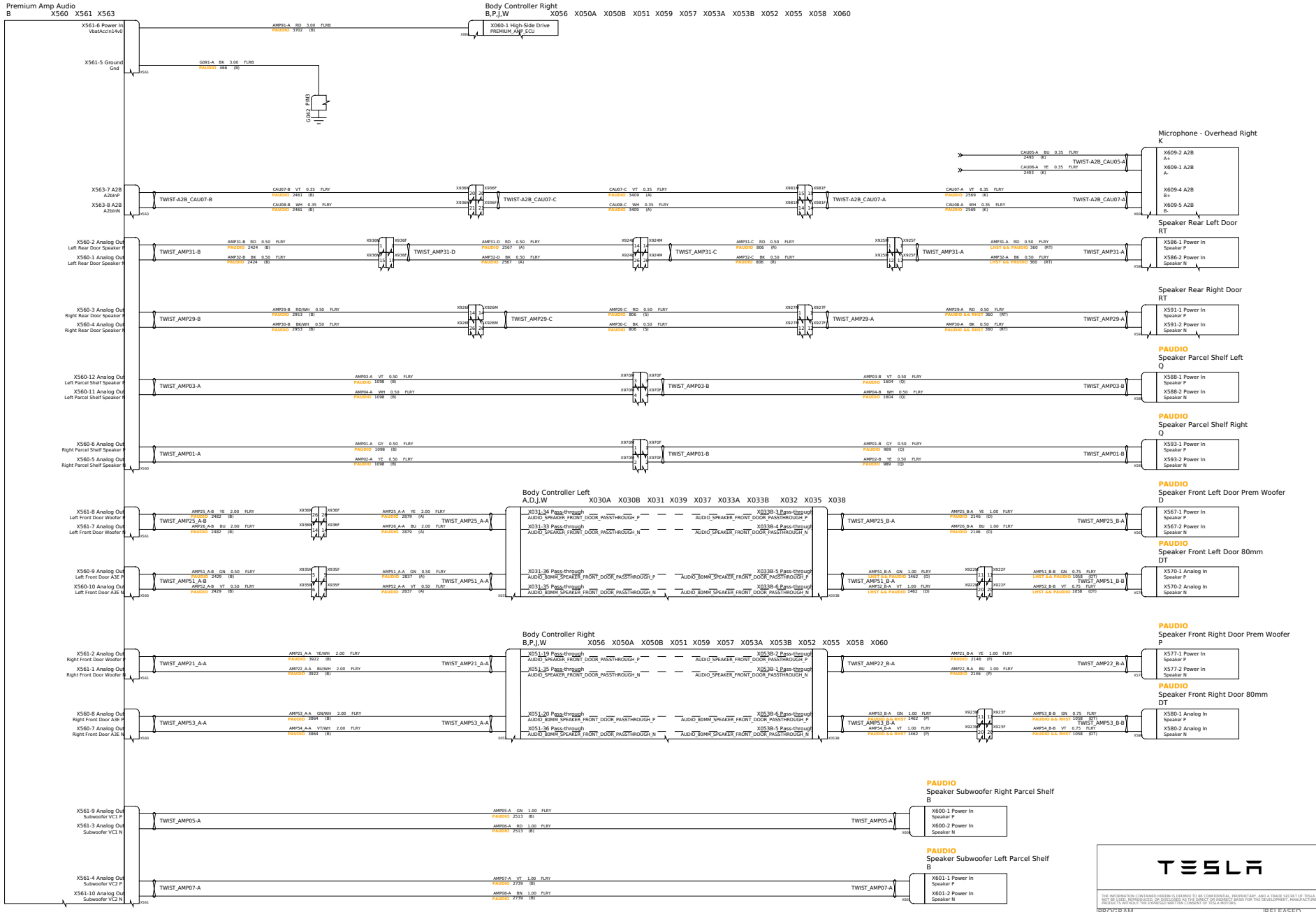
PAUDIO
Premium Amp Audio
B X560 X561 X563
Body Controller Right
B,P,J,W X056 X050A X050B X051 X059 X057 X053A X053B X052 X055 X058 X060
X561-6 Power In
VbatAccIn14v0
X561-5 Ground
Grid
G042_PAR3
X060-1 High-Side Drive
PREMIUM_AMP_ECU
Microphone - Overhead Right
K
X609-2 A2B
A+
X609-1 A2B
A-
X609-4 A2B
B+
X609-5 A2B
B-
X563-7 A2B
A2bisP
X563-8 A2B
A2bisN
TWIST-A2B_CAU07-B
TWIST-A2B_CAU07-C
TWIST-A2B_CAU07-A
TWIST-A2B_CAU05-A
TWIST-A2B_CAU07-A
Speaker Rear Left Door
RT
X560-2 Analog Out
Left Rear Door Speaker P
X560-1 Analog Out
Left Rear Door Speaker N
TWIST_AMP31-B
TWIST_AMP31-D
TWIST_AMP31-C
TWIST_AMP31-A
TWIST_AMP31-A
X586-1 Power In
Speaker P
X586-2 Power In
Speaker N
Speaker Rear Right Door
RT
X560-3 Analog Out
Right Rear Door Speaker P
X560-4 Analog Out
Right Rear Door Speaker N
TWIST_AMP29-B
TWIST_AMP29-C
TWIST_AMP29-A
TWIST_AMP29-A
X591-1 Power In
Speaker P
X591-2 Power In
Speaker N
PAUDIO
Speaker Parcel Shelf Left
Q
X560-12 Analog Out
Left Parcel Shelf Speaker P
X560-11 Analog Out
Left Parcel Shelf Speaker N
TWIST_AMP03-A
TWIST_AMP03-B
TWIST_AMP03-B
X588-1 Power In
Speaker P
X588-2 Power In
Speaker N
PAUDIO
Speaker Parcel Shelf Right
Q
X560-6 Analog Out
Right Parcel Shelf Speaker P
X560-5 Analog Out
Right Parcel Shelf Speaker N
TWIST_AMP01-A
TWIST_AMP01-B
TWIST_AMP01-B
X593-1 Power In
Speaker P
X593-2 Power In
Speaker N
Body Controller Left
A,D,J,W X030A X030B X031 X039 X037 X033A X033B X032 X035 X038
PAUDIO
Speaker Front Left Door Prem Woofer
D
X561-8 Analog Out
Left Front Door Woofer P
X561-7 Analog Out
Left Front Door Woofer N
TWIST_AMP25_A-B
TWIST_AMP25_A-A
X031-34 Pass-through
AUDIO_SPEAKER_FRONT_DOOR_PASSTHROUGH_P
X031-33 Pass-through
AUDIO_SPEAKER_FRONT_DOOR_PASSTHROUGH_N
X033B-3 Pass-through
AUDIO_SPEAKER_FRONT_DOOR_PASSTHROUGH_P
X033B-4 Pass-through
AUDIO_SPEAKER_FRONT_DOOR_PASSTHROUGH_N
TWIST_AMP25_B-A
TWIST_AMP25_B-A
X567-1 Power In
Speaker P
X567-2 Power In
Speaker N
PAUDIO
Speaker Front Left Door 80mm
DT
X560-9 Analog Out
Left Front Door A3E P
X560-10 Analog Out
Left Front Door A3E N
TWIST_AMP51_A-B
TWIST_AMP51_A-A
X031-36 Pass-through
AUDIO_80MM_SPEAKER_FRONT_DOOR_PASSTHROUGH_P
X031-35 Pass-through
AUDIO_80MM_SPEAKER_FRONT_DOOR_PASSTHROUGH_N
X033B-5 Pass-through
AUDIO_80MM_SPEAKER_FRONT_DOOR_PASSTHROUGH_P
X033B-6 Pass-through
AUDIO_80MM_SPEAKER_FRONT_DOOR_PASSTHROUGH_N
TWIST_AMP51_B-A
TWIST_AMP51_B-B
X570-1 Analog In
Speaker P
X570-2 Analog In
Speaker N
Body Controller Right
B,P,J,W X056 X050A X050B X051 X059 X057 X053A X053B X052 X055 X058 X060
PAUDIO
Speaker Front Right Door Prem Woofer
P
X561-2 Analog Out
Right Front Door Woofer P
X561-1 Analog Out
Right Front Door Woofer N
TWIST_AMP21_A-A
TWIST_AMP21_A-A
X051-19 Pass-through
AUDIO_SPEAKER_FRONT_DOOR_PASSTHROUGH_P
X051-35 Pass-through
AUDIO_SPEAKER_FRONT_DOOR_PASSTHROUGH_N
X053B-2 Pass-through
AUDIO_SPEAKER_FRONT_DOOR_PASSTHROUGH_P
X053B-1 Pass-through
AUDIO_SPEAKER_FRONT_DOOR_PASSTHROUGH_N
TWIST_AMP22_B-A
TWIST_AMP22_B-A
X577-1 Power In
Speaker P
X577-2 Power In
Speaker N
PAUDIO
Speaker Front Right Door 80mm
DT
X560-8 Analog Out
Right Front Door A3E P
X560-7 Analog Out
Right Front Door A3E N
TWIST_AMP53_A-A
TWIST_AMP53_A-A
X051-20 Pass-through
AUDIO_80MM_SPEAKER_FRONT_DOOR_PASSTHROUGH_P
X051-36 Pass-through
AUDIO_80MM_SPEAKER_FRONT_DOOR_PASSTHROUGH_N
X053B-6 Pass-through
AUDIO_80MM_SPEAKER_FRONT_DOOR_PASSTHROUGH_P
X053B-5 Pass-through
AUDIO_80MM_SPEAKER_FRONT_DOOR_PASSTHROUGH_N
TWIST_AMP53_B-A
TWIST_AMP53_B-B
X580-1 Analog In
Speaker P
X580-2 Analog In
Speaker N
PAUDIO
Speaker Subwoofer Right Parcel Shelf
B
X561-9 Analog Out
Subwoofer VC1 P
X561-3 Analog Out
Subwoofer VC1 N
TWIST_AMP05-A
TWIST_AMP05-A
X600-1 Power In
Speaker P
X600-2 Power In
Speaker N
PAUDIO
Speaker Subwoofer Left Parcel Shelf
B
X561-4 Analog Out
Subwoofer VC2 P
X561-10 Analog Out
Subwoofer VC2 N
TWIST_AMP07-A
TWIST_AMP07-A
X601-1 Power In
Speaker P
X601-2 Power In
Speaker N
TESLA
THE INFORMATION CONTAINED HEREIN IS DEEMED TO BE CONFIDENTIAL, PROPRIETARY, AND A TRADE SECRET OF TESLA MOTORS. T
NOT BE USED, REPRODUCED, OR DISCLOSED AS THE DIRECT OR INDIRECT BASIS FOR THE DEVELOPMENT, MANUFACTURE, OR SALE
PRODUCTS WITHOUT THE EXPRESSO WRITTEN CONSENT OF TESLA MOTORS.
PROGRAM
Model 3 SOP9
RELEASED
Oct 2025
NAME
Audio - Premium Amp
SHEET
6 OF 57

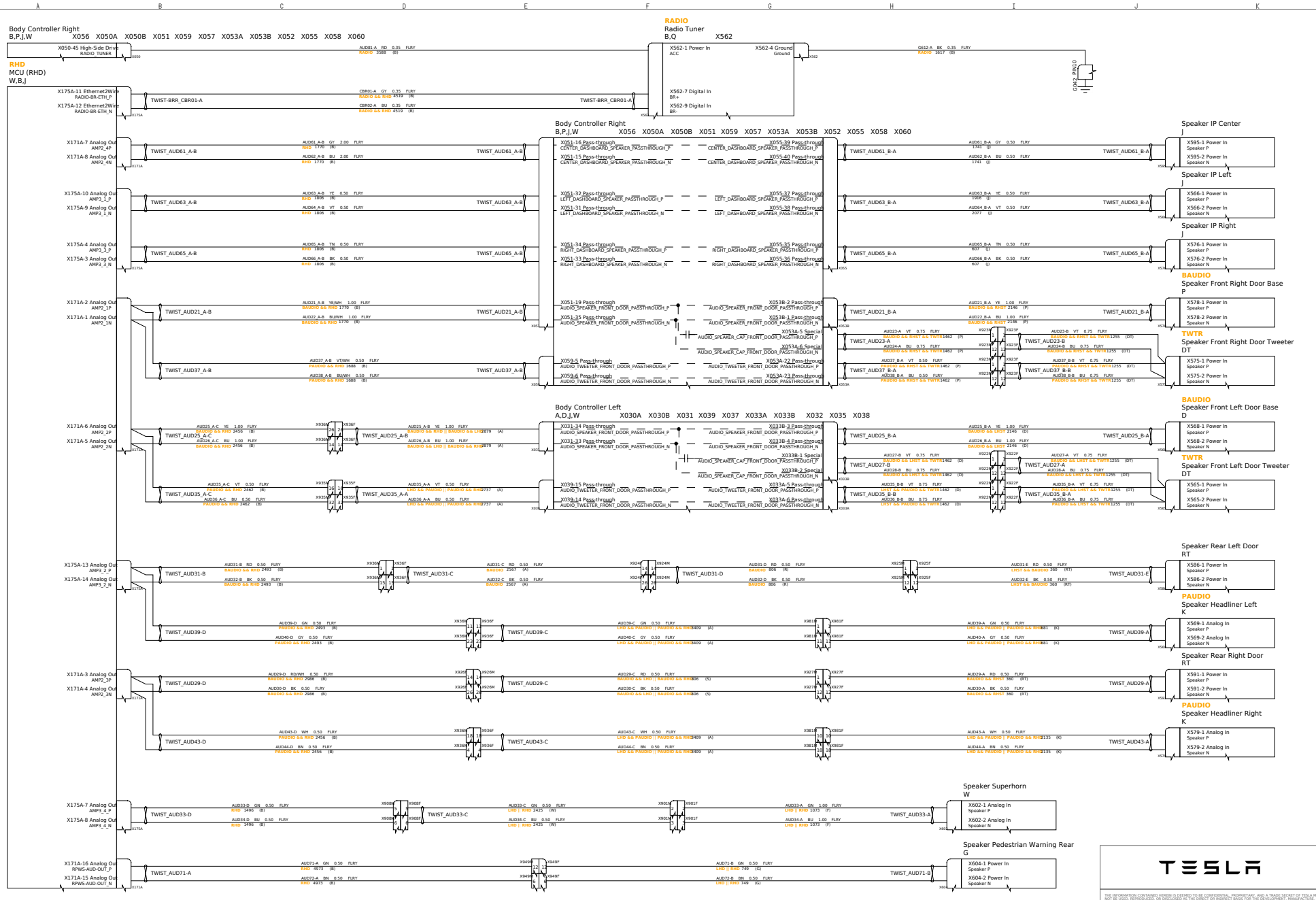

THE INFORMATION CONTAINED HEREIN IS DEEMED TO BE CONFIDENTIAL, PROPRIETARY, AND A TRADE SECRET OF TESLA MOTORS. T
NOT BE USED, REPRODUCED, OR DISCLOSED AS THE DIRECT OR INDIRECT BASIS FOR THE DEVELOPMENT, MANUFACTURE, OR SALE
PRODUCTS WITHOUT THE EXPRESSO WRITTEN CONSENT OF TESLA MOTORS.

PROGRAM Model 3 SOP9	RELEASED Oct 2025
NAME Audio - RHD	SHEET 7 OF 57

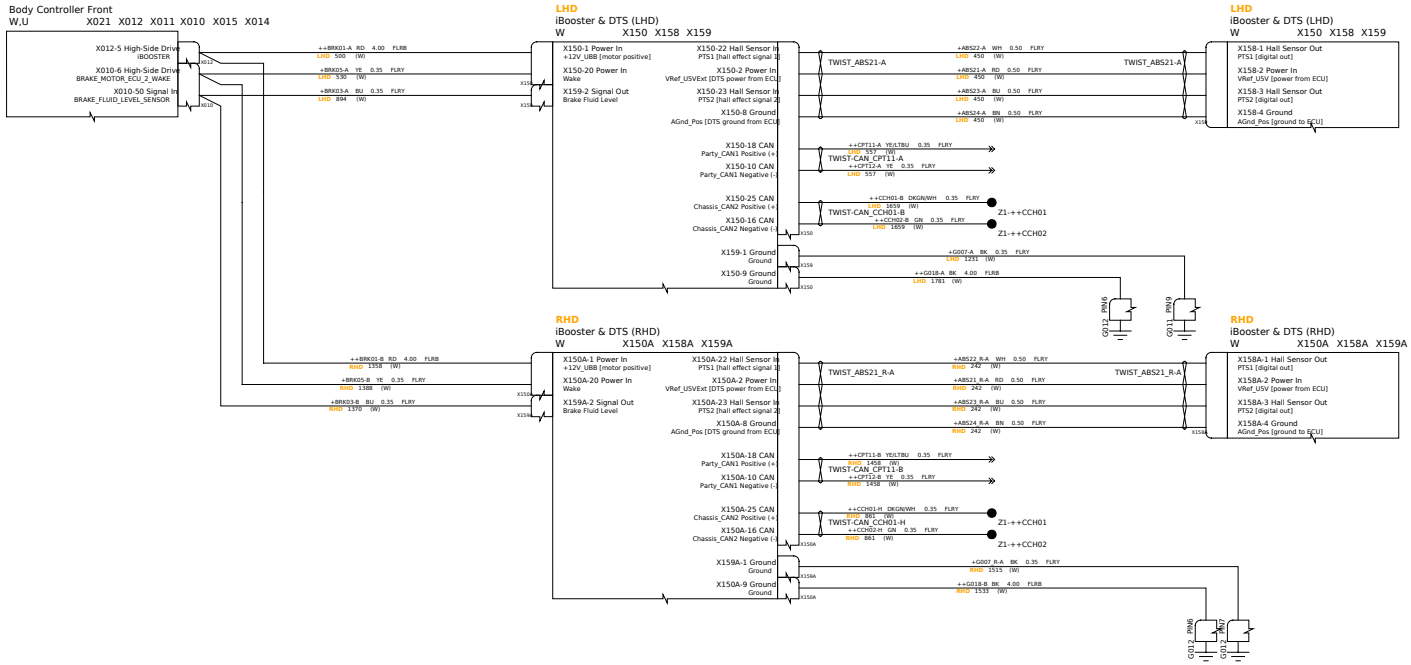

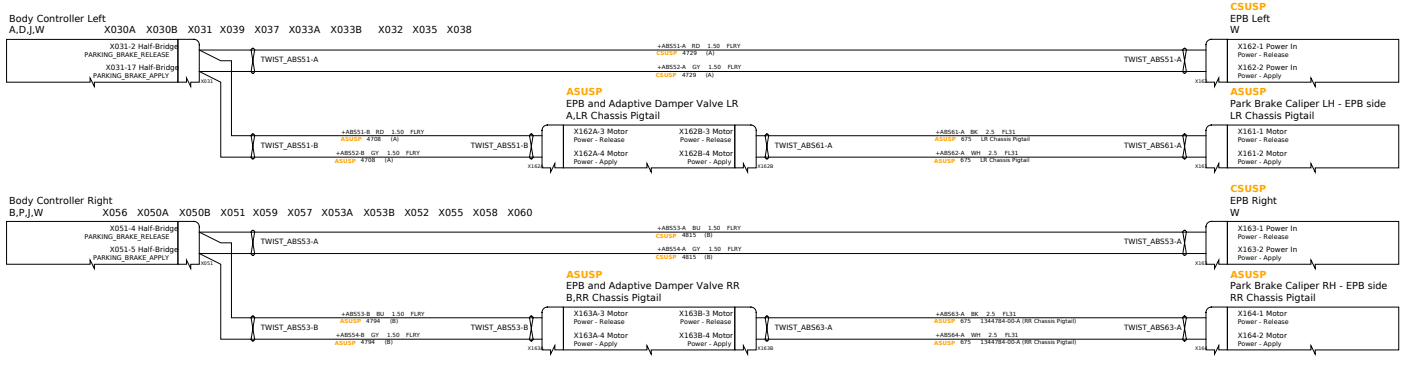

TESLA

THE INFORMATION CONTAINED HEREIN IS DEEMED TO BE CONFIDENTIAL, PROPRIETARY, AND A TRADE SECRET OF TESLA MOTORS. T
NOT BE USED, REPRODUCED, OR DISCLOSED AS THE DIRECT OR INDIRECT BASIS FOR THE DEVELOPMENT, MANUFACTURE, OR SALE
PRODUCTS WITHOUT THE EXPRESSO WRITTEN CONSENT OF TESLA MOTORS.

PROGRAM Model 3 SOP9	RELEASED Oct 2025
NAME Braking and Stability	SHEET 8 OF 57

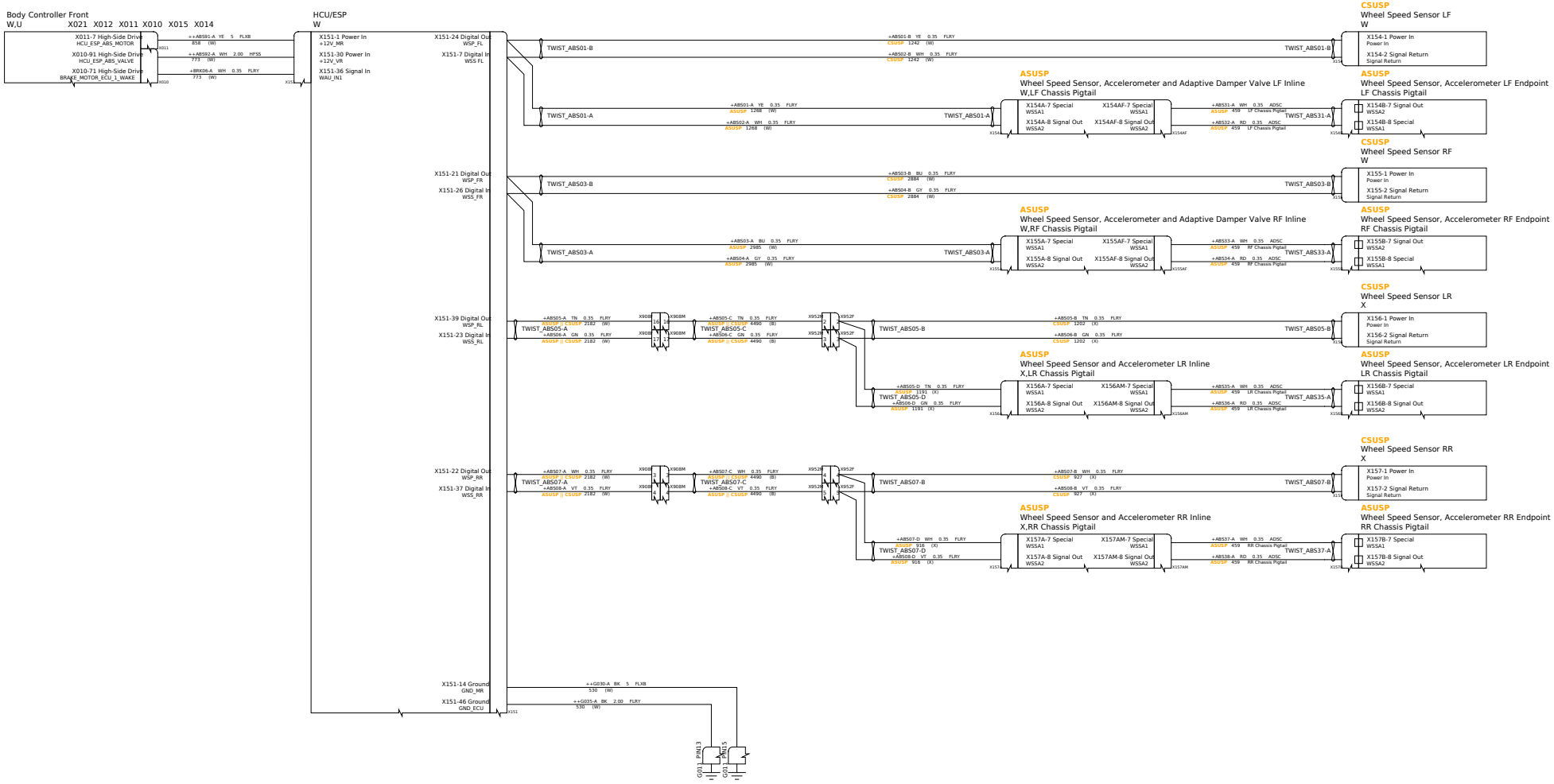

TESLA

THE INFORMATION CONTAINED HEREIN IS DEEMED TO BE CONFIDENTIAL, PROPRIETARY, AND A TRADE SECRET OF TESLA MOTORS. T
NOT BE USED, REPRODUCED, OR DISCLOSED AS THE DIRECT OR INDIRECT BASIS FOR THE DEVELOPMENT, MANUFACTURE, OR SALE
PRODUCTS WITHOUT THE EXPRESSO WRITTEN CONSENT OF TESLA MOTORS.

PROGRAM	RELEASED
Model 3 SOP9	Oct 2025
NAME	SHEET
Braking and Stability - Wheel Speed Sensors	9 of 57

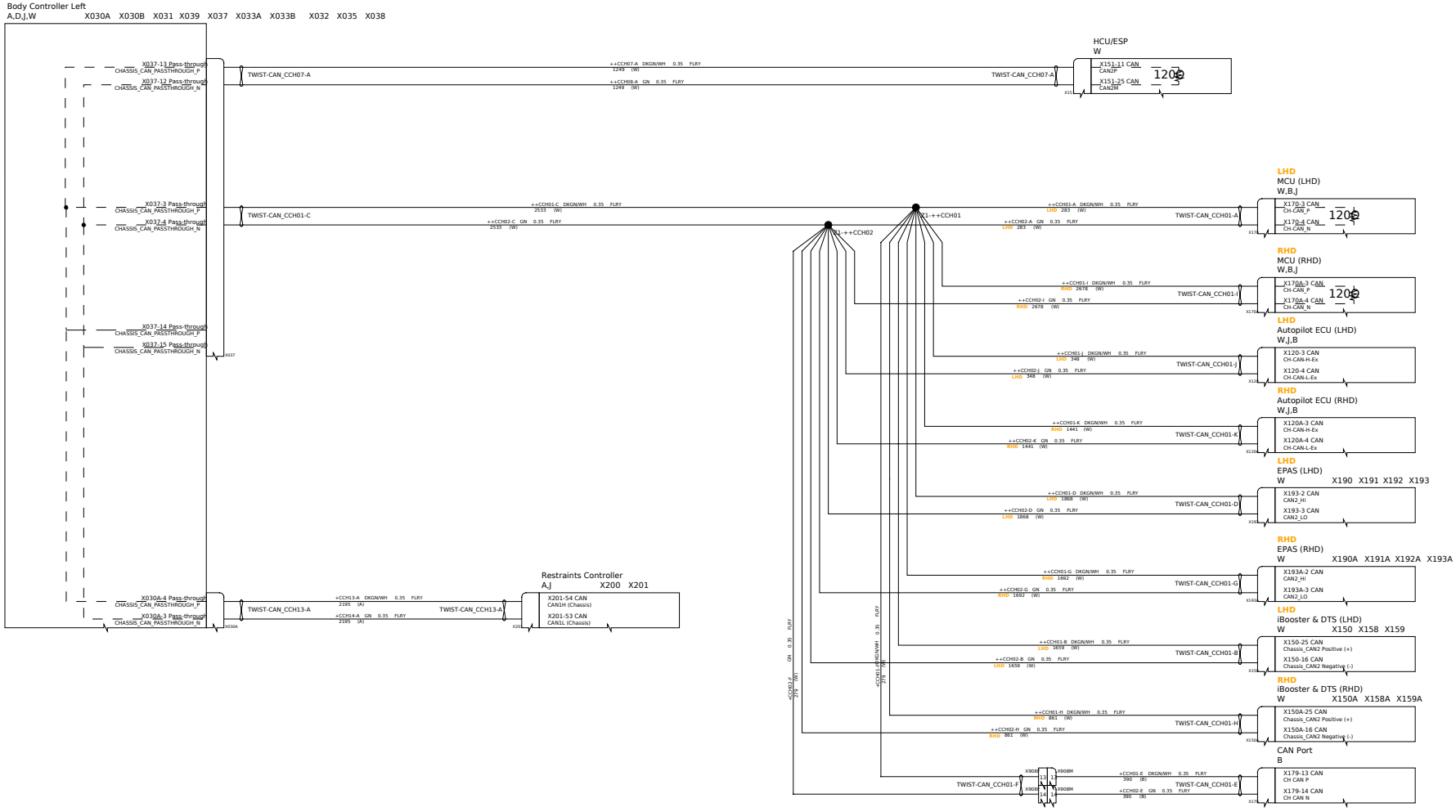

TESLA

THE INFORMATION CONTAINED HEREIN IS DEEMED TO BE CONFIDENTIAL, PROPRIETARY, AND A TRADE SECRET OF TESLA MOTORS. T
NOT BE USED, REPRODUCED, OR DISCLOSED AS THE DIRECT OR INDIRECT BASIS FOR THE DEVELOPMENT, MANUFACTURE, OR SALE
PRODUCTS WITHOUT THE EXPRESSO WRITTEN CONSENT OF TESLA MOTORS.

PROGRAM	RELEASED
Model 3 SOP9	Oct 2025
NAME	SHEET
CAN - Chassis	10 OF 57

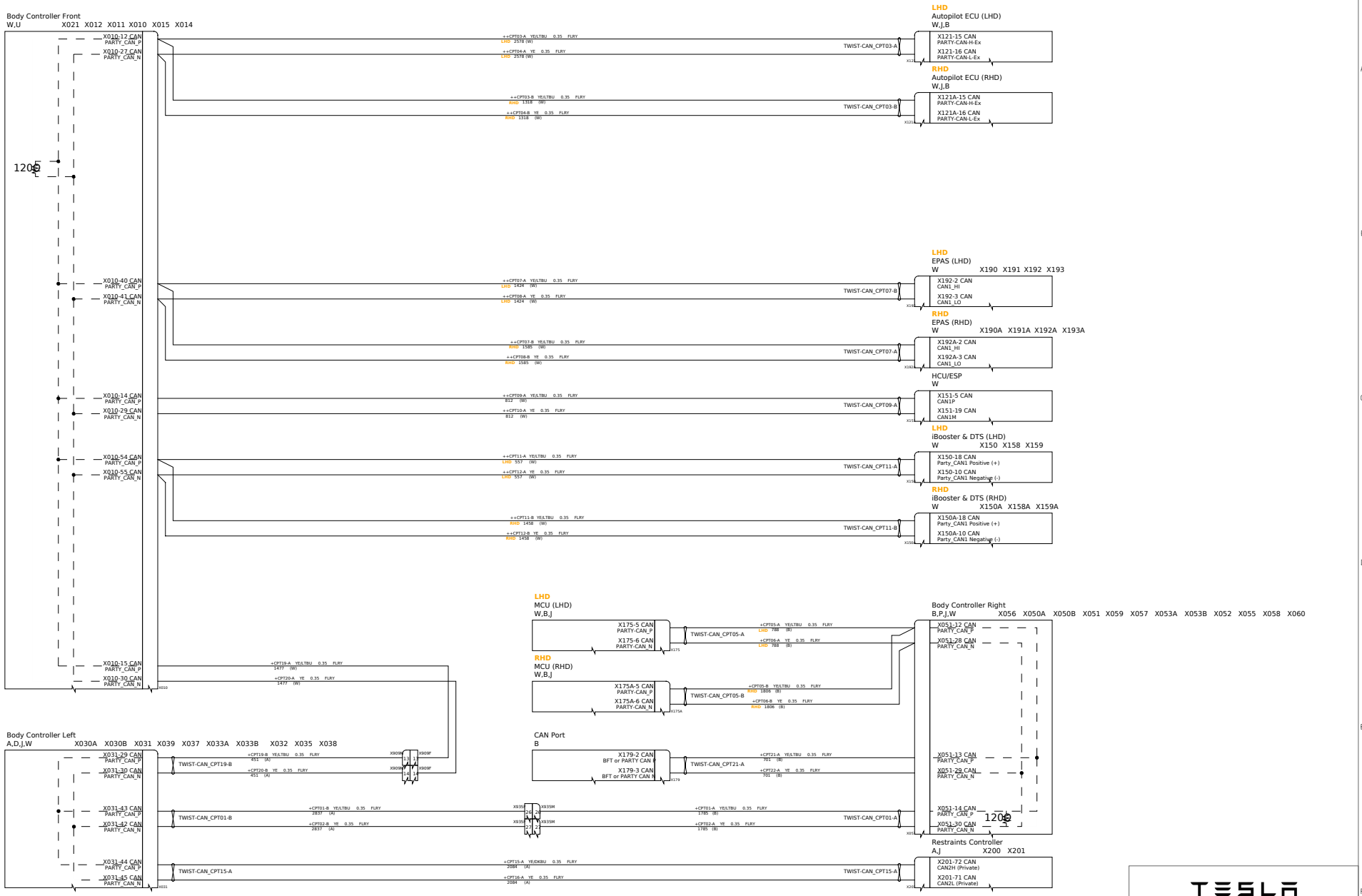

TESLA

THE INFORMATION CONTAINED HEREIN IS DEEMED TO BE CONFIDENTIAL, PROPRIETARY, AND A TRADE SECRET OF TESLA MOTORS. T
NOT BE USED, REPRODUCED, OR DISCLOSED AS THE DIRECT OR INDIRECT BASIS FOR THE DEVELOPMENT, MANUFACTURE, OR SALE
PRODUCTS WITHOUT THE EXPRESSO WRITTEN CONSENT OF TESLA MOTORS.

PROGRAM Model 3 SOP9	RELEASED Oct 2025
NAME CAN - Party	SHEET 11 OF 57

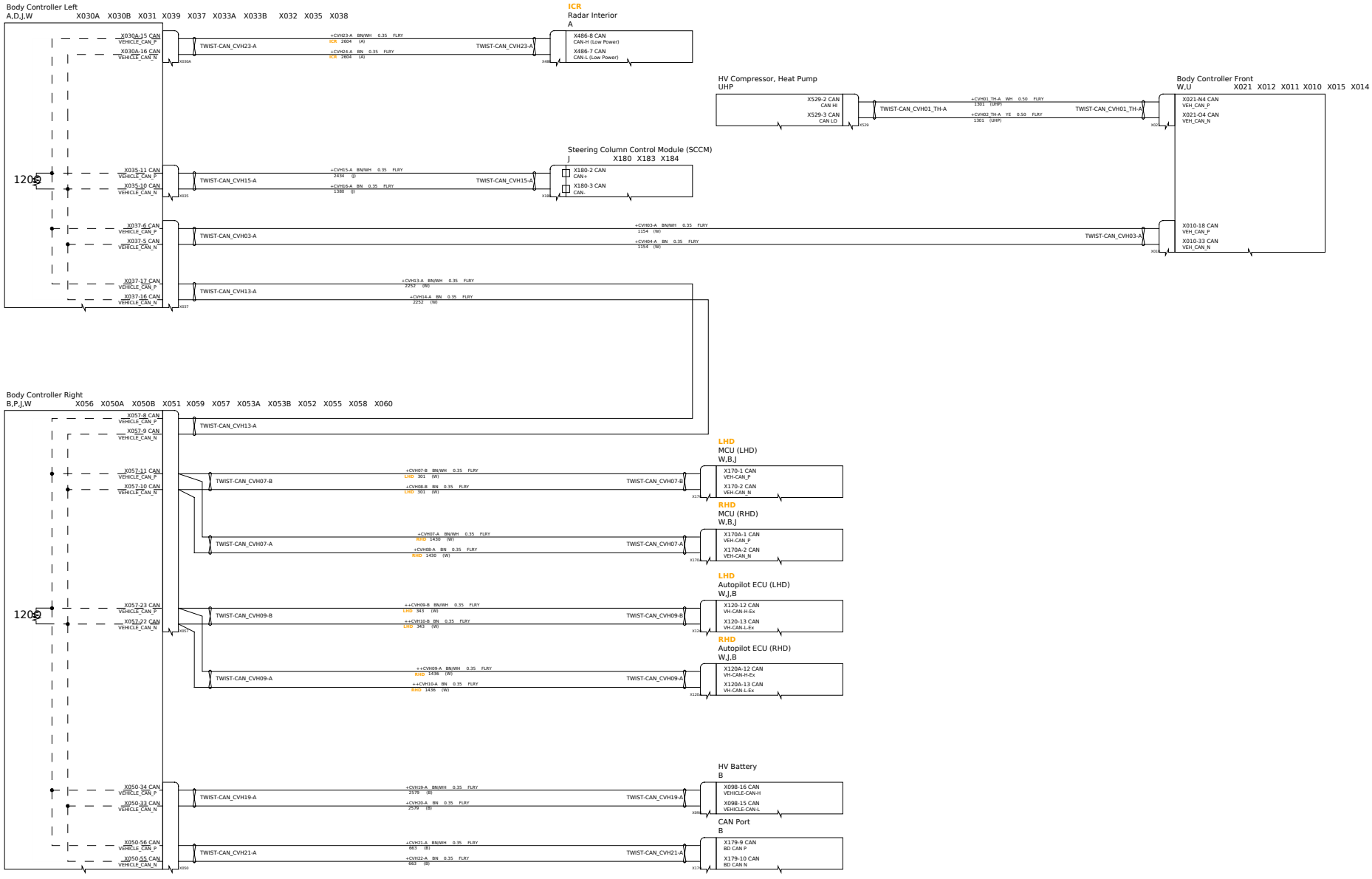

TESLA

THE INFORMATION CONTAINED HEREIN IS DEEMED TO BE CONFIDENTIAL, PROPRIETARY, AND A TRADE SECRET OF TESLA MOTORS. T
NOT BE USED, REPRODUCED, OR DISCLOSED AS THE DIRECT OR INDIRECT BASIS FOR THE DEVELOPMENT, MANUFACTURE, OR SALE
PRODUCTS WITHOUT THE EXPRESSO WRITTEN CONSENT OF TESLA MOTORS.

PROGRAM	RELEASED
Model 3 SOP9	Oct 2025
NAME	SHEET
CAN - Vehicle	12 OF 57

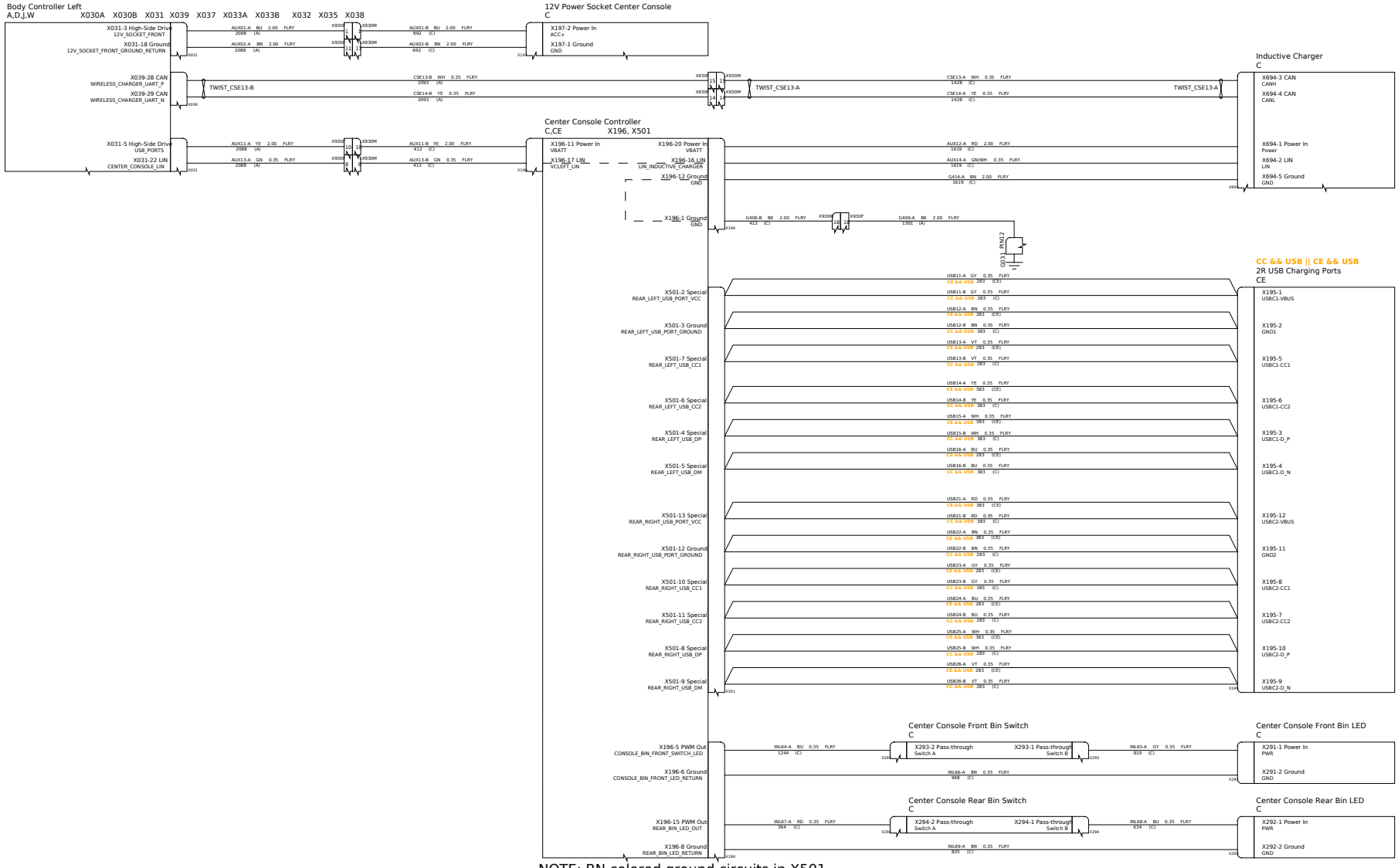

NOTE: BN colored ground circuits in X501 may be interchanged.

TESLA

THE INFORMATION CONTAINED HEREIN IS DEEMED TO BE CONFIDENTIAL, PROPRIETARY, AND A TRADE SECRET OF TESLA MOTORS. T
NOT BE USED, REPRODUCED, OR DISCLOSED AS THE DIRECT OR INDIRECT BASIS FOR THE DEVELOPMENT, MANUFACTURE, OR SALE
PRODUCTS WITHOUT THE EXPRESSO WRITTEN CONSENT OF TESLA MOTORS.

PROGRAM	RELEASED
Model 3 SOP9	Oct 2025
NAME	SHEET
Center Console	13 OF 57

TESLA

THE INFORMATION CONTAINED HEREIN IS DEEMED TO BE CONFIDENTIAL, PROPRIETARY, AND A TRADE SECRET OF TESLA MOTORS. T
NOT BE USED, REPRODUCED, OR DISCLOSED AS THE DIRECT OR INDIRECT BASIS FOR THE DEVELOPMENT, MANUFACTURE, OR SALE
PRODUCTS WITHOUT THE EXPRESSO WRITTEN CONSENT OF TESLA MOTORS.

PROGRAM Model 3 SOP9	RELEASED Oct 2025
NAME Charge Port Inlet	SHEET 14 OF 57

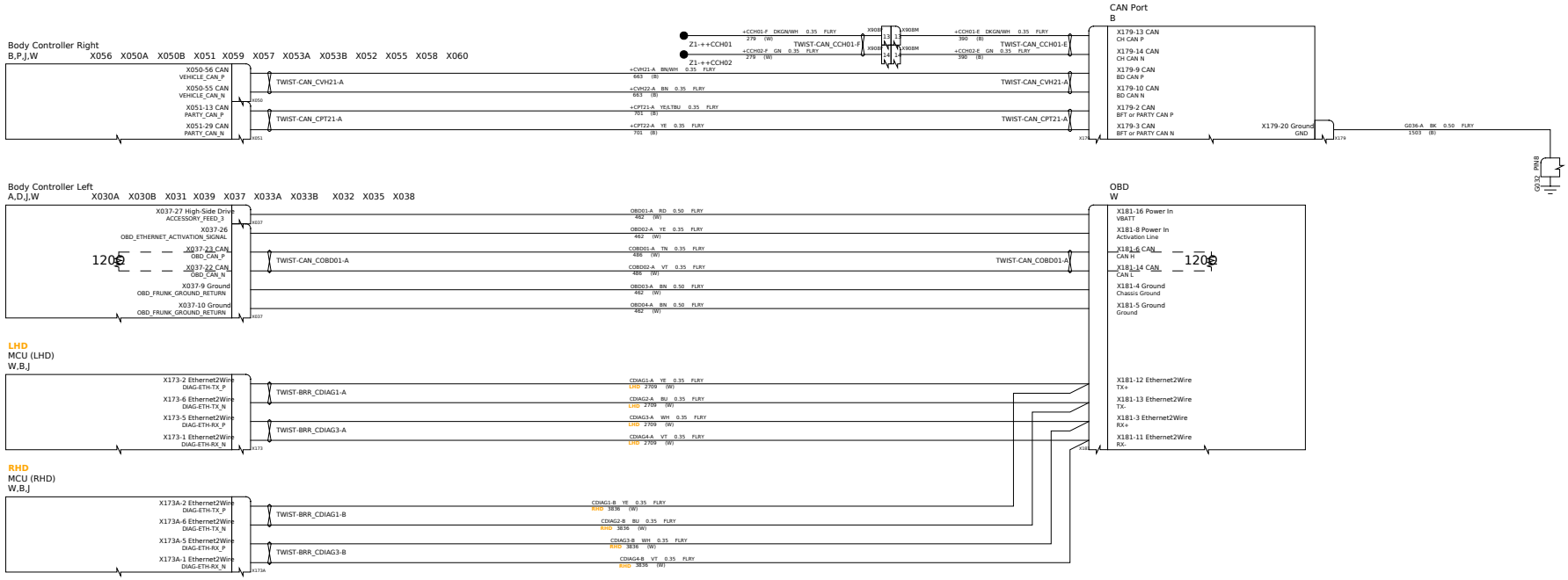

TESLA

THE INFORMATION CONTAINED HEREIN IS DEEMED TO BE CONFIDENTIAL, PROPRIETARY, AND A TRADE SECRET OF TESLA MOTORS. T
NOT BE USED, REPRODUCED, OR DISCLOSED AS THE DIRECT OR INDIRECT BASIS FOR THE DEVELOPMENT, MANUFACTURE, OR SALE
PRODUCTS WITHOUT THE EXPRESSO WRITTEN CONSENT OF TESLA MOTORS.

PROGRAM	RELEASED
Model 3 SOP9	Oct 2025
NAME	SHEET
Diagnostics	15 OF 57

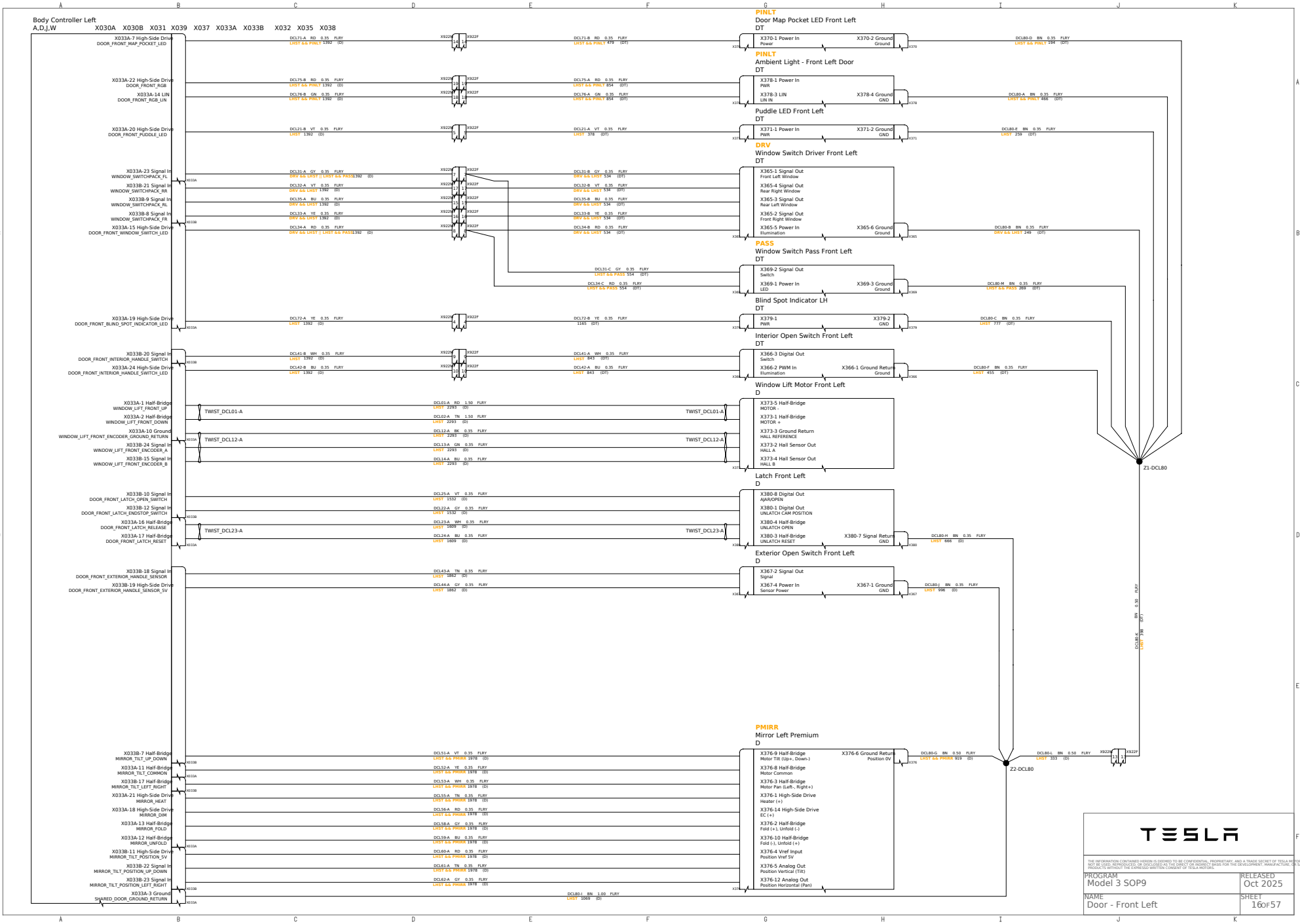

TESLA

THE INFORMATION CONTAINED HEREIN IS DEEMED TO BE CONFIDENTIAL, PROPRIETARY, AND A TRADE SECRET OF TESLA MOTORS. T
NOT BE USED, REPRODUCED, OR DISCLOSED AS THE DIRECT OR INDIRECT BASIS FOR THE DEVELOPMENT, MANUFACTURE, OR SALE
PRODUCTS WITHOUT THE EXPRESSO WRITTEN CONSENT OF TESLA MOTORS.

PROGRAM Model 3 SOP9	RELEASED Oct 2025
NAME Door - Front Left	SHEET 16 OF 57

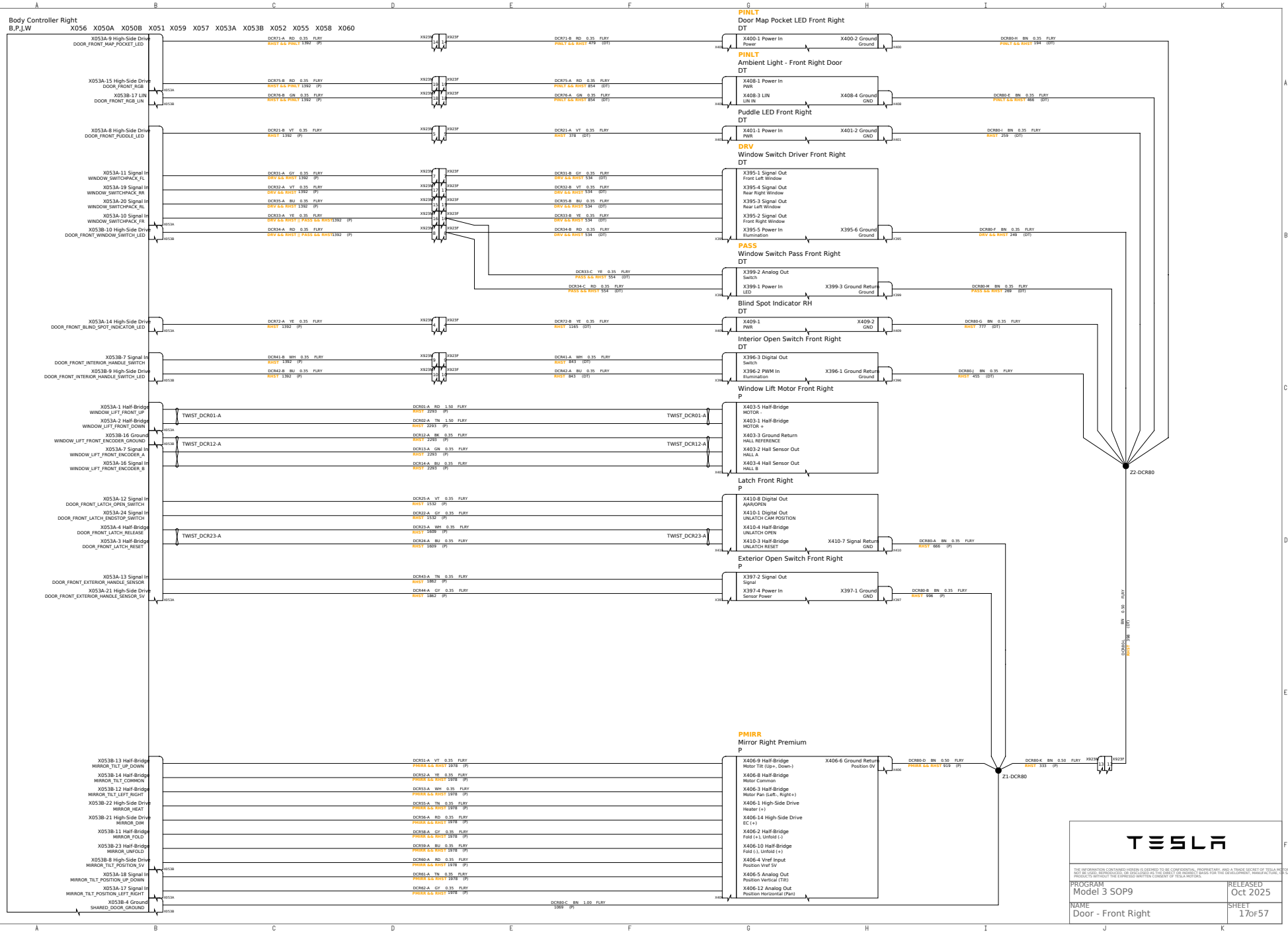

TESLA

THE INFORMATION CONTAINED HEREIN IS DEEMED TO BE CONFIDENTIAL, PROPRIETARY, AND A TRADE SECRET OF TESLA MOTORS. T
NOT BE USED, REPRODUCED, OR DISCLOSED AS THE DIRECT OR INDIRECT BASIS FOR THE DEVELOPMENT, MANUFACTURE, OR SALE
PRODUCTS WITHOUT THE EXPRESSO WRITTEN CONSENT OF TESLA MOTORS.

PROGRAM	RELEASED
Model 3 SOP9	Oct 2025
NAME	SHEET
Door - Front Right	17 OF 57

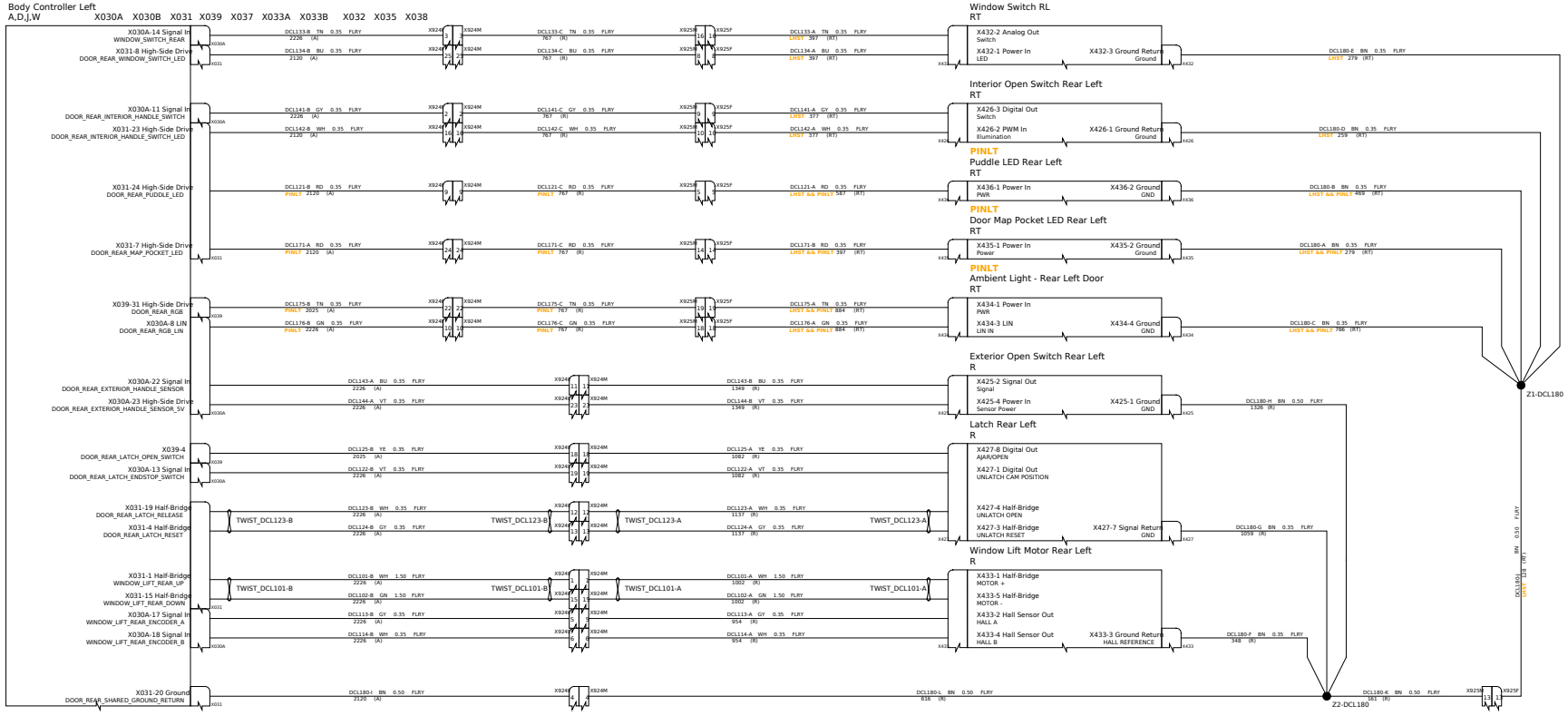

TESLA

THE INFORMATION CONTAINED HEREIN IS DEEMED TO BE CONFIDENTIAL, PROPRIETARY, AND A TRADE SECRET OF TESLA MOTORS. T
NOT BE USED, REPRODUCED, OR DISCLOSED AS THE DIRECT OR INDIRECT BASIS FOR THE DEVELOPMENT, MANUFACTURE, OR SALE
PRODUCTS WITHOUT THE EXPRESSO WRITTEN CONSENT OF TESLA MOTORS.

PROGRAM Model 3 SOP9	RELEASED Oct 2025
NAME Door - Rear Left	SHEET 18 OF 57

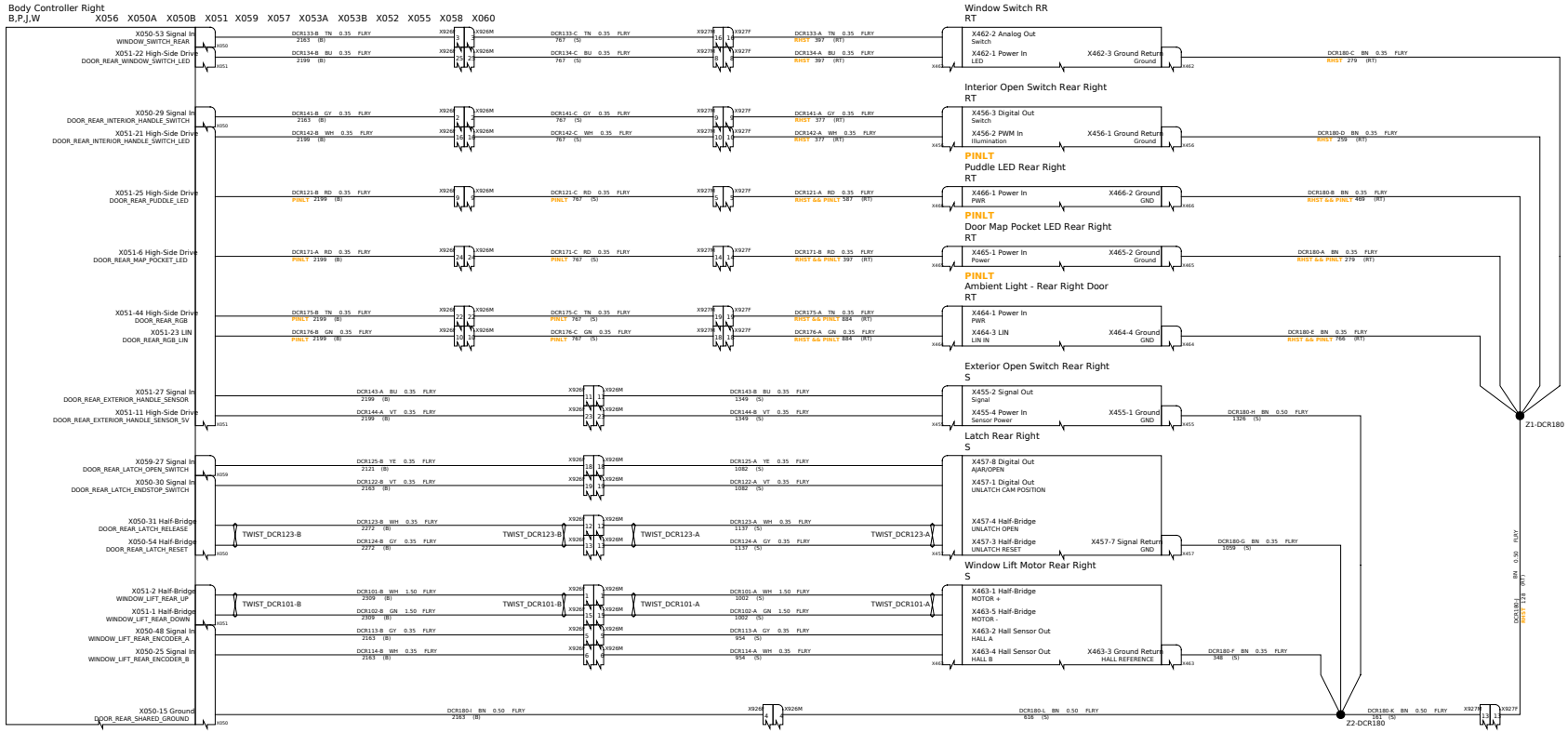

TESLA

THE INFORMATION CONTAINED HEREIN IS DEEMED TO BE CONFIDENTIAL, PROPRIETARY, AND A TRADE SECRET OF TESLA MOTORS. T
NOT BE USED, REPRODUCED, OR DISCLOSED AS THE DIRECT OR INDIRECT BASIS FOR THE DEVELOPMENT, MANUFACTURE, OR SALE
PRODUCTS WITHOUT THE EXPRESSO WRITTEN CONSENT OF TESLA MOTORS.

PROGRAM Model 3 SOP9	RELEASED Oct 2025
NAME Door - Rear Right	SHEET 19 OF 57

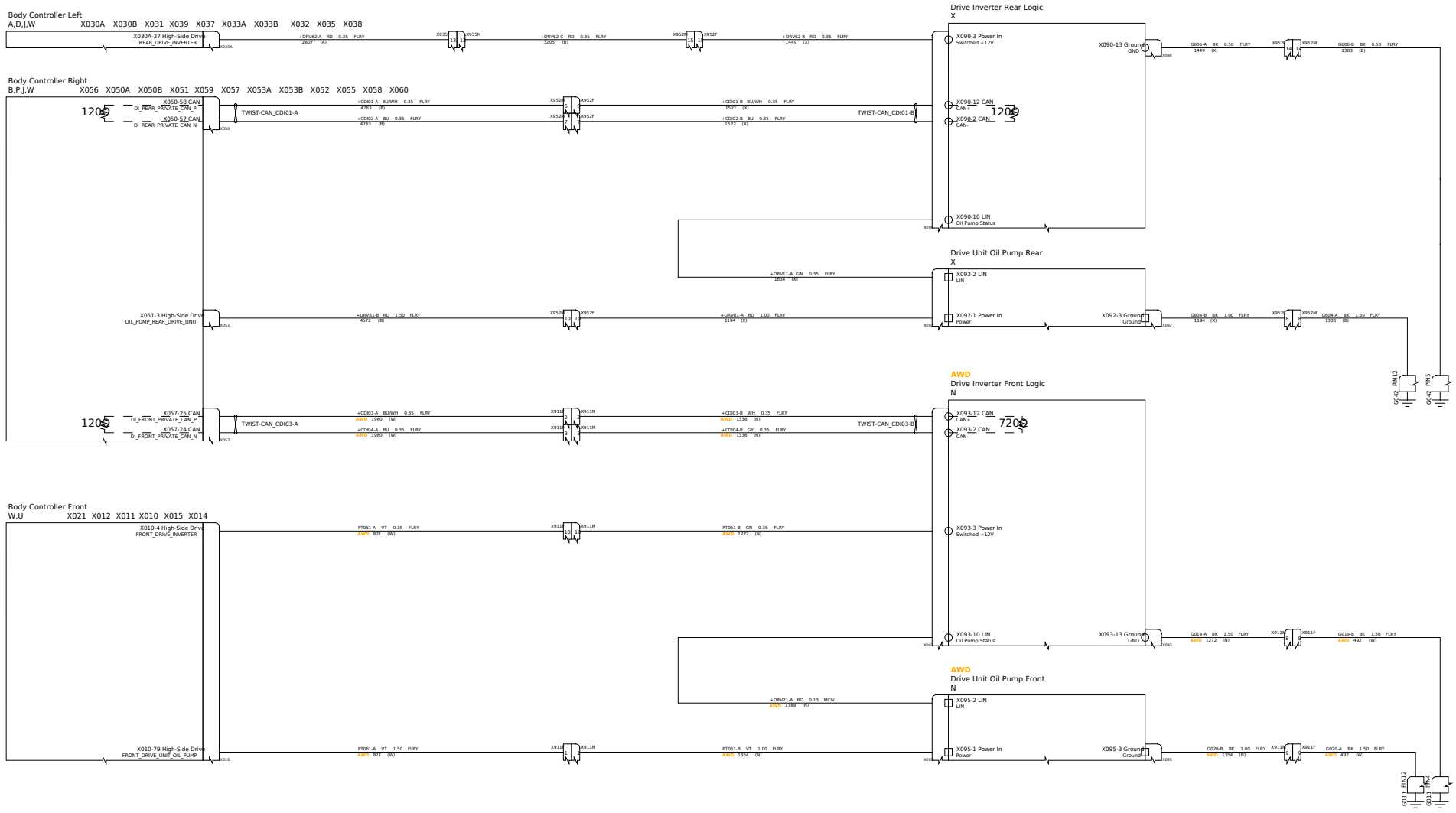

TESLA

THE INFORMATION CONTAINED HEREIN IS DEEMED TO BE CONFIDENTIAL, PROPRIETARY, AND A TRADE SECRET OF TESLA MOTORS. T
NOT BE USED, REPRODUCED, OR DISCLOSED AS THE DIRECT OR INDIRECT BASIS FOR THE DEVELOPMENT, MANUFACTURE, OR SALE
PRODUCTS WITHOUT THE EXPRESSO WRITTEN CONSENT OF TESLA MOTORS.

PROGRAM Model 3 SOP9	RELEASED Oct 2025
NAME Drive Inverters - Power and Comms	SHEET 20 OF 57

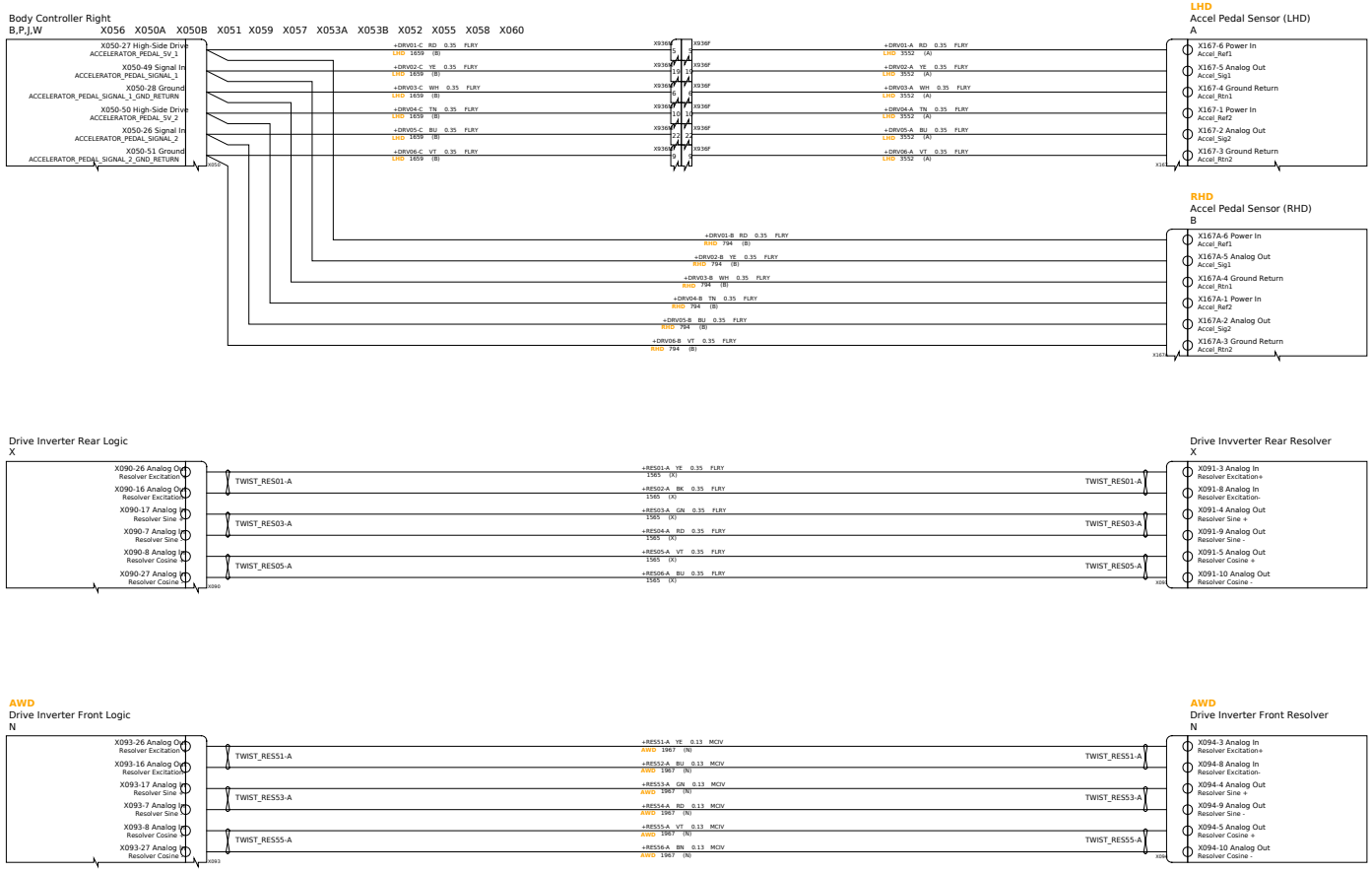

THE INFORMATION CONTAINED HEREIN IS DEEMED TO BE CONFIDENTIAL, PROPRIETARY, AND A TRADE SECRET OF TESLA MOTORS. T
NOT BE USED, REPRODUCED, OR DISCLOSED AS THE DIRECT OR INDIRECT BASIS FOR THE DEVELOPMENT, MANUFACTURE, OR SALE
PRODUCTS WITHOUT THE EXPRESSO WRITTEN CONSENT OF TESLA MOTORS.

PROGRAM	RELEASED
Model 3 SOP9	Oct 2025
NAME	SHEET
Drive Inverters - Resolvers and Pedals	21 OF 57

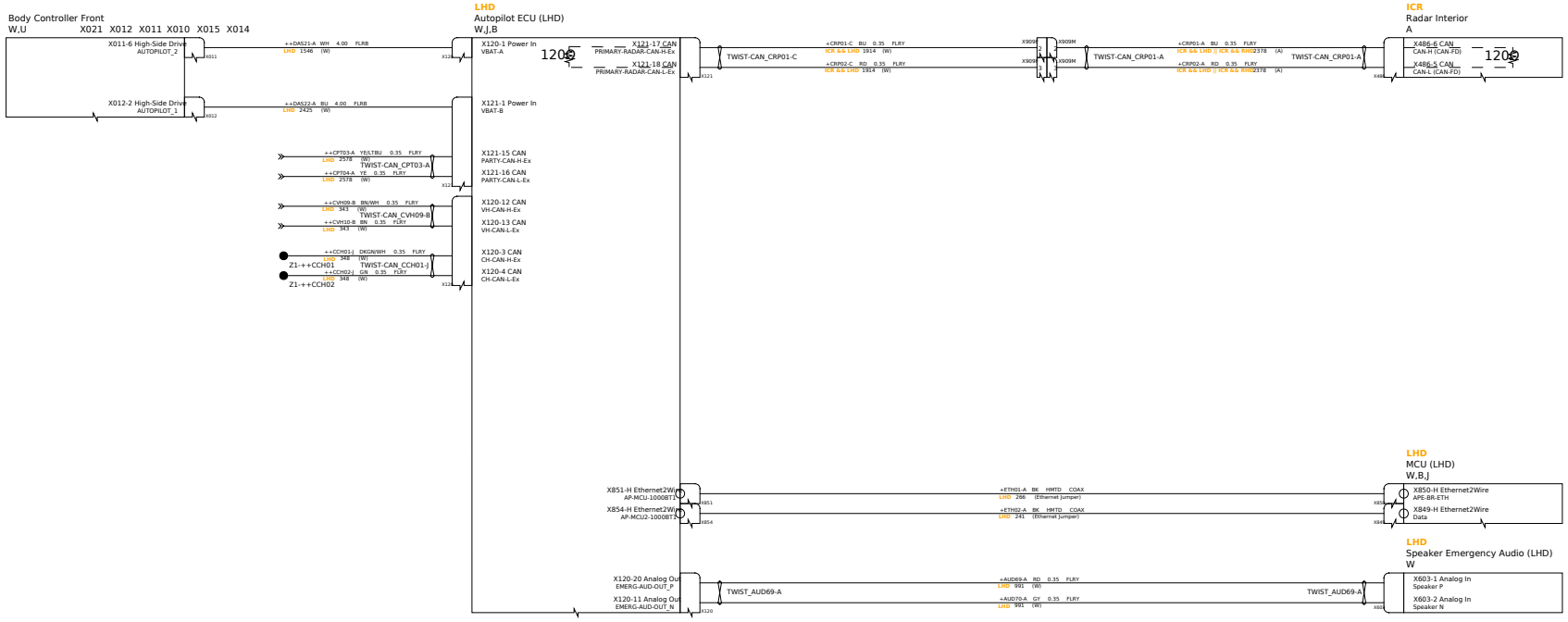

TESLA

THE INFORMATION CONTAINED HEREIN IS DEEMED TO BE CONFIDENTIAL, PROPRIETARY, AND A TRADE SECRET OF TESLA MOTORS. T
NOT BE USED, REPRODUCED, OR DISCLOSED AS THE DIRECT OR INDIRECT BASIS FOR THE DEVELOPMENT, MANUFACTURE, OR SALE
PRODUCTS WITHOUT THE EXPRESSO WRITTEN CONSENT OF TESLA MOTORS.

PROGRAM	RELEASED
Model 3 SOP9	Oct 2025
NAME	SHEET
Driver Assistance - LHD	22 OF 57

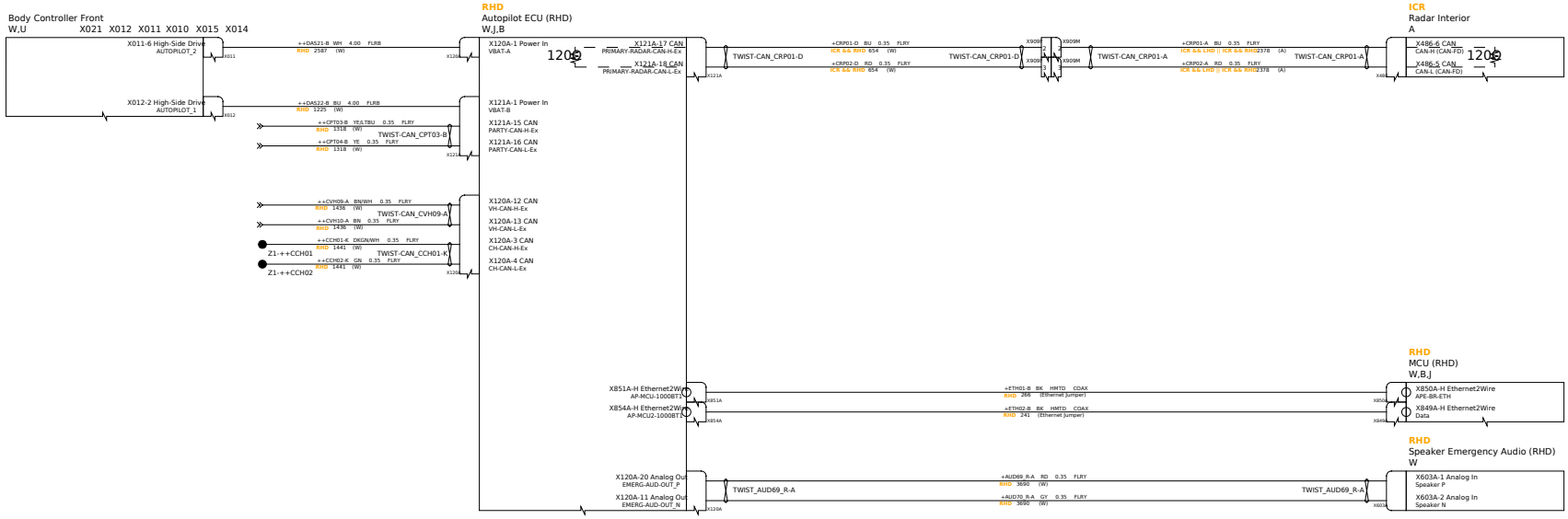

TESLA

THE INFORMATION CONTAINED HEREIN IS DEEMED TO BE CONFIDENTIAL, PROPRIETARY, AND A TRADE SECRET OF TESLA MOTORS. T
NOT BE USED, REPRODUCED, OR DISCLOSED AS THE DIRECT OR INDIRECT BASIS FOR THE DEVELOPMENT, MANUFACTURE, OR SALE
PRODUCTS WITHOUT THE EXPRESSO WRITTEN CONSENT OF TESLA MOTORS.

PROGRAM	RELEASED
Model 3 SOP9	Oct 2025
NAME	SHEET
Driver Assistance - RHD	23 OF 57

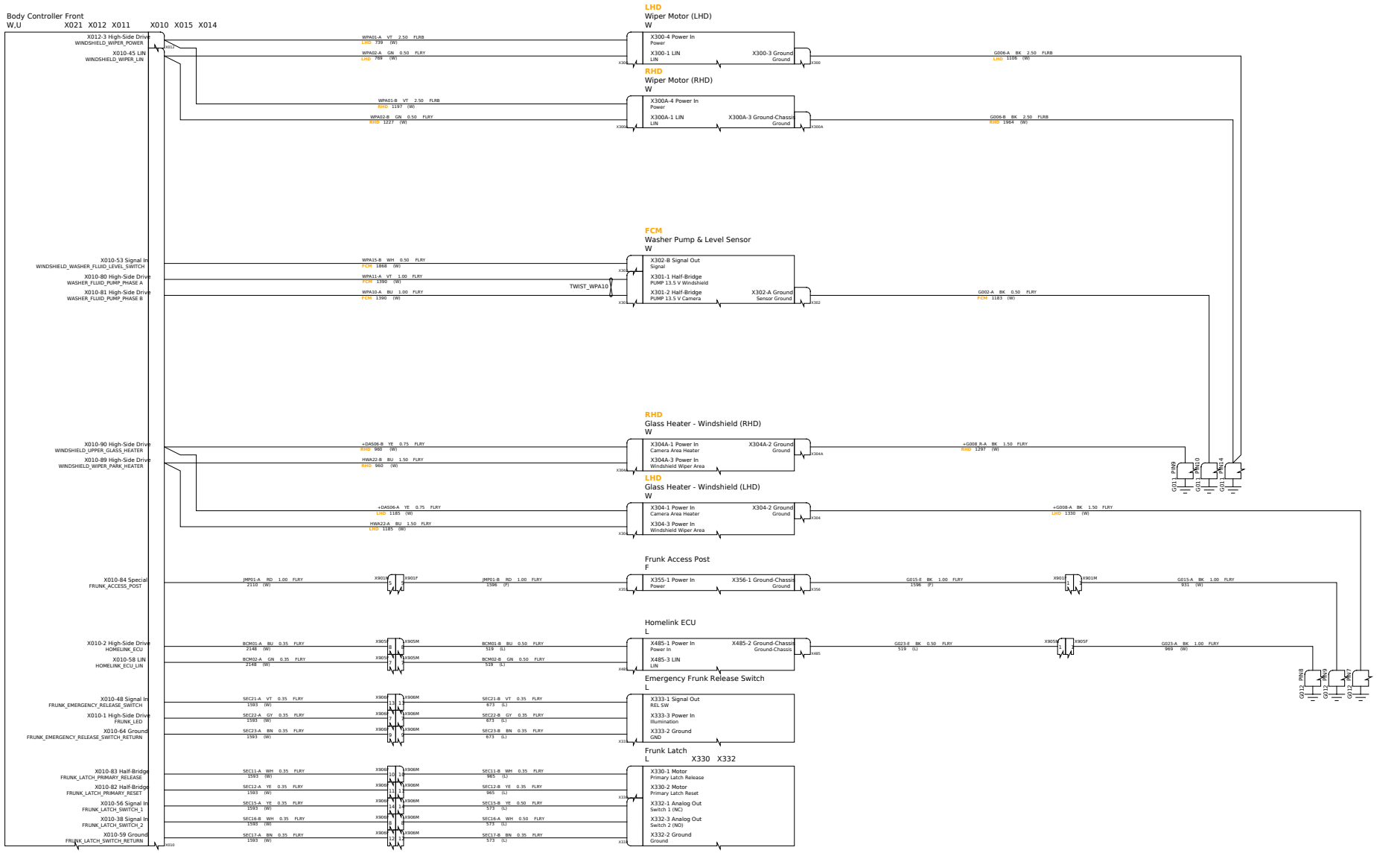

TESLA

THE INFORMATION CONTAINED HEREIN IS DEEMED TO BE CONFIDENTIAL, PROPRIETARY, AND A TRADE SECRET OF TESLA MOTORS. T
NOT BE USED, REPRODUCED, OR DISCLOSED AS THE DIRECT OR INDIRECT BASIS FOR THE DEVELOPMENT, MANUFACTURE, OR SALE
PRODUCTS WITHOUT THE EXPRESSO WRITTEN CONSENT OF TESLA MOTORS.

PROGRAM	RELEASED
Model 3 SOP9	Oct 2025
NAME	SHEET
Frunk Actuators / Sensors	24 OF 57

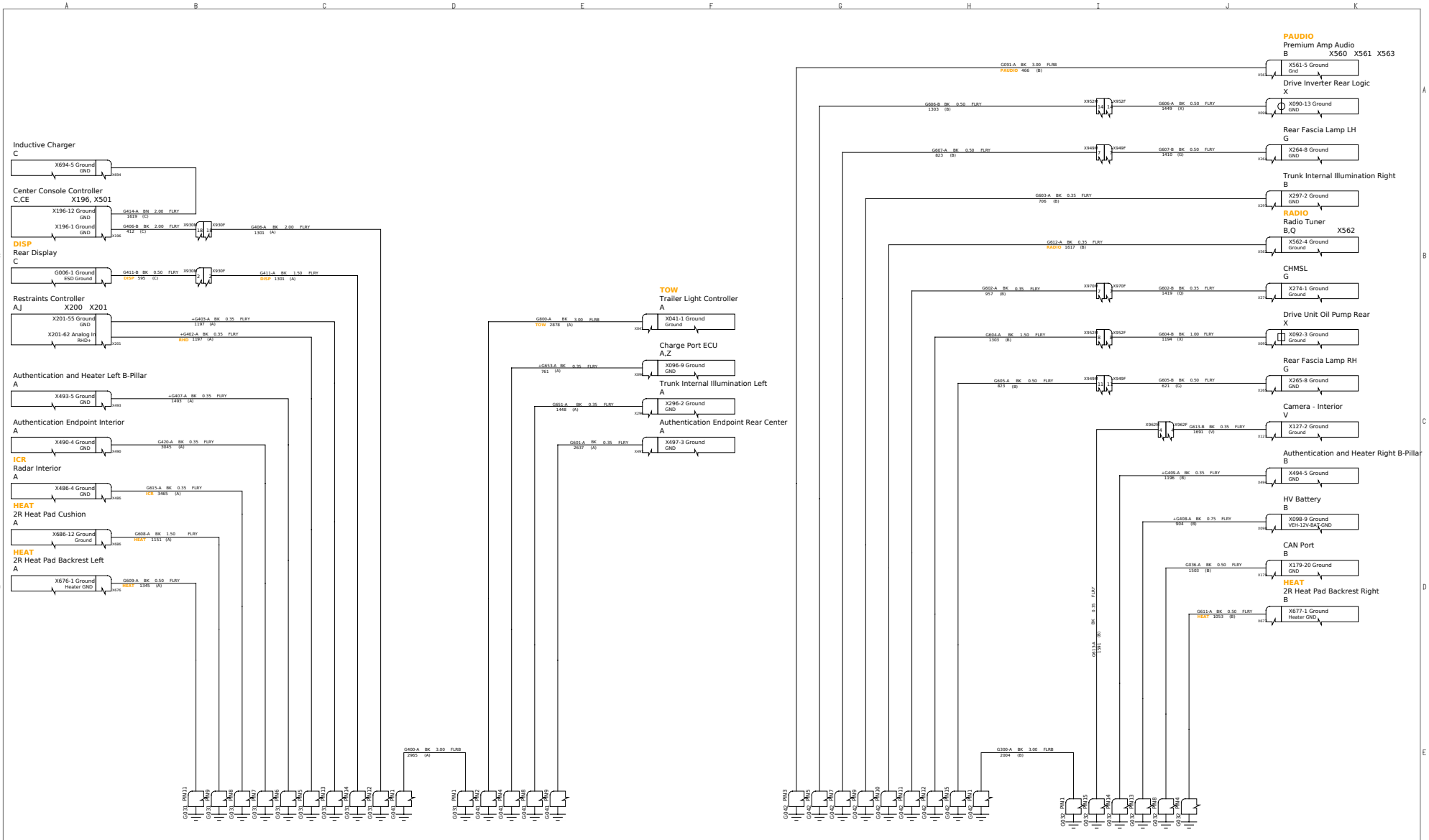

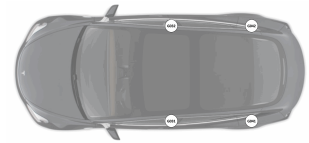

TESLA

THE INFORMATION CONTAINED HEREIN IS DEEMED TO BE CONFIDENTIAL, PROPRIETARY, AND A TRADE SECRET OF TESLA MOTORS. T
NOT BE USED, REPRODUCED, OR DISCLOSED AS THE DIRECT OR INDIRECT BASIS FOR THE DEVELOPMENT, MANUFACTURE, OR SALE
PRODUCTS WITHOUT THE EXPRESSO WRITTEN CONSENT OF TESLA MOTORS.

PROGRAM Model 3 SOP9	RELEASED Oct 2025
NAME Grounding - Cabin	SHEET 25 OF 57

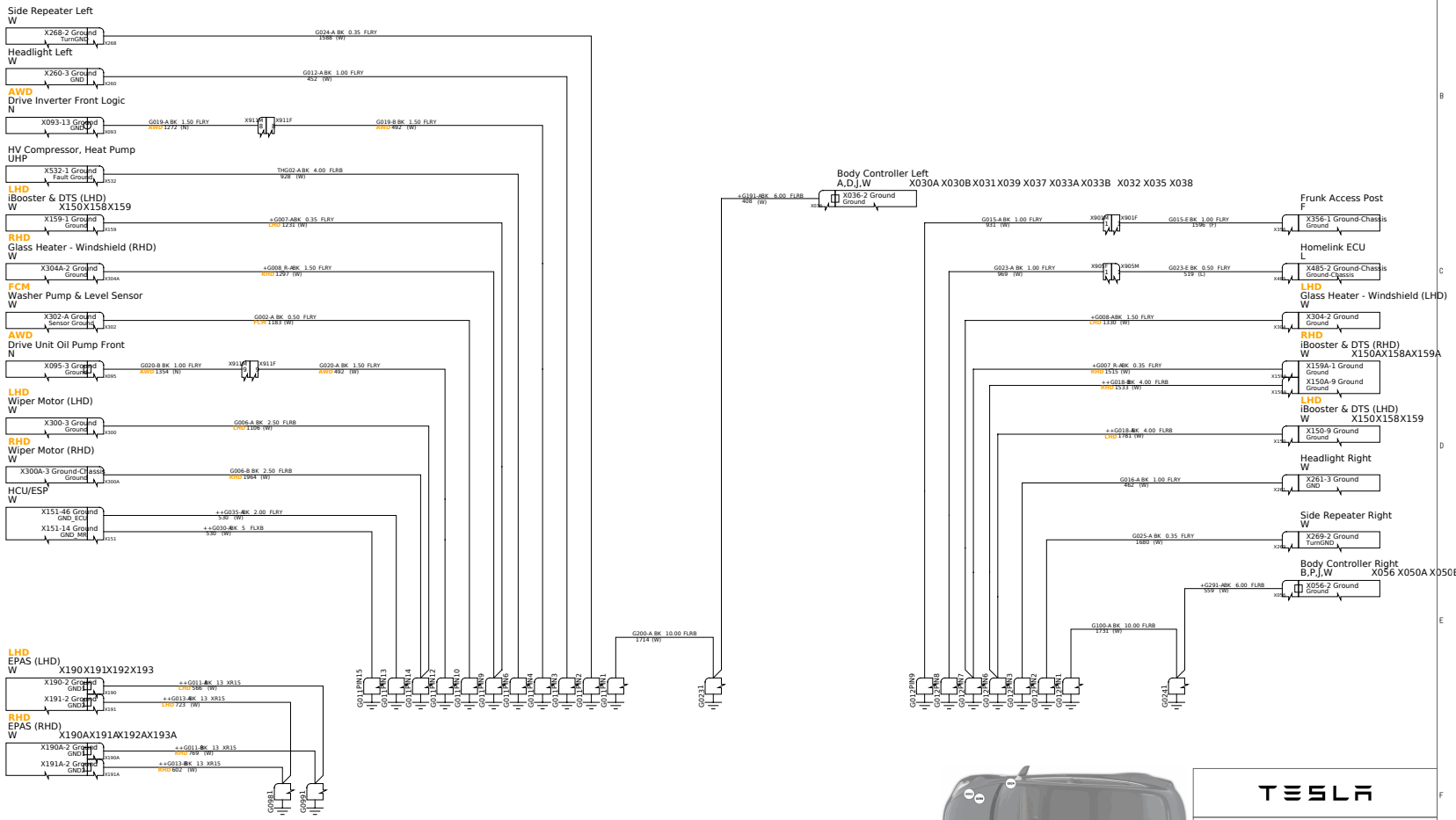

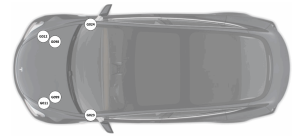

TESLA

THE INFORMATION CONTAINED HEREIN IS DEEMED TO BE CONFIDENTIAL, PROPRIETARY, AND A TRADE SECRET OF TESLA MOTORS. THIS INFORMATION MAY NOT BE USED, REPRODUCED, OR DISCLOSED AS THE DIRECT OR INDIRECT BASIS FOR THE DEVELOPMENT, MANUFACTURE, OR SALE OF PROCESSES OR PRODUCTS WITHOUT THE EXPRESSED WRITTEN CONSENT OF TESLA MOTORS.

PROGRAM Model 3 SOP9	RELEASED Oct 2025
NAME Grounding - Frunk	SHEET 26 OF 57

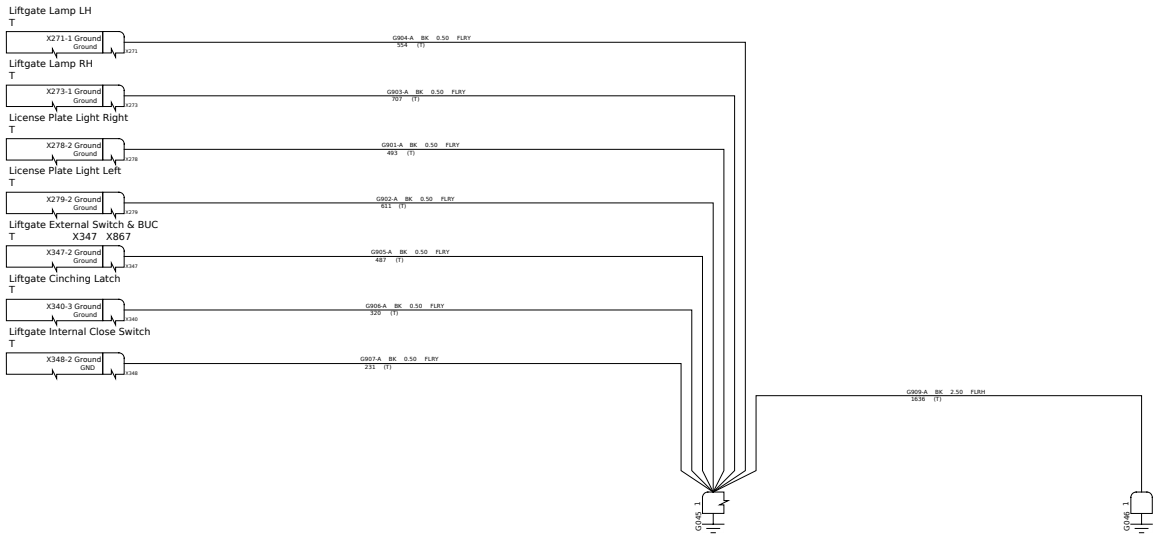

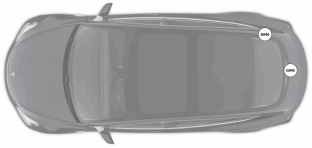

TESLA

THE INFORMATION CONTAINED HEREIN IS DEEMED TO BE CONFIDENTIAL, PROPRIETARY, AND A TRADE SECRET OF TESLA MOTORS. T
NOT BE USED, REPRODUCED, OR DISCLOSED AS THE DIRECT OR INDIRECT BASIS FOR THE DEVELOPMENT, MANUFACTURE, OR SALE
PRODUCTS WITHOUT THE EXPRESSO WRITTEN CONSENT OF TESLA MOTORS.

PROGRAM Model 3 SOP9	RELEASED Oct 2025
NAME Grounding - Trunk	SHEET 27 OF 57

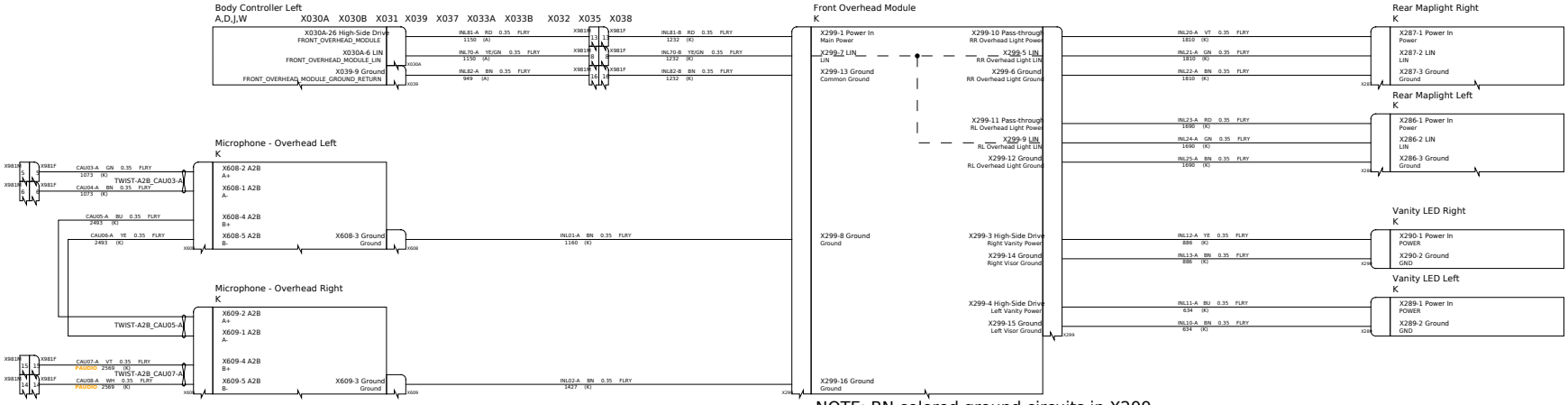

NOTE: BN colored ground circuits in X299 may be interchanged.

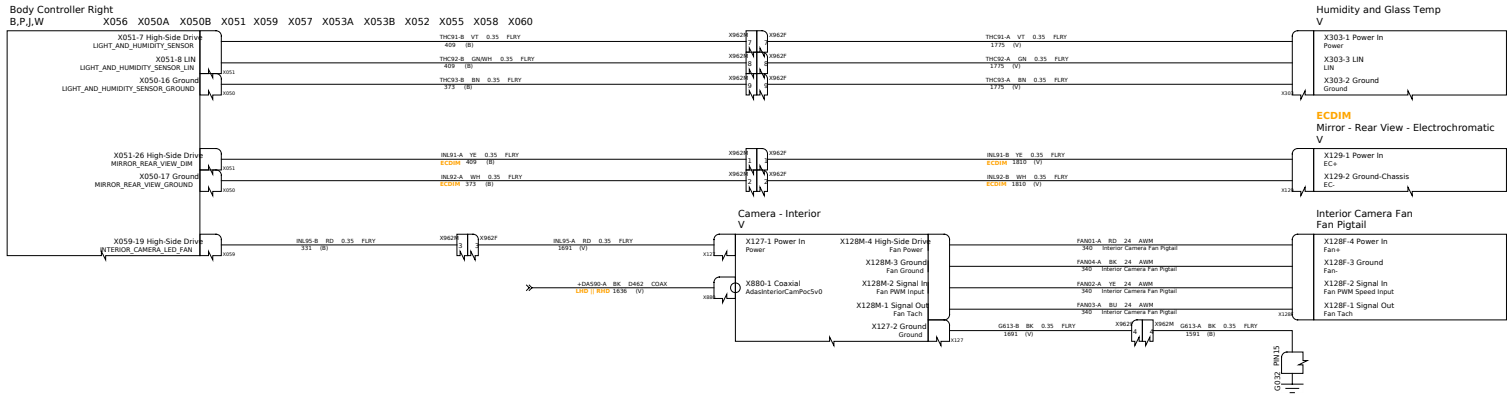

TESLA

THE INFORMATION CONTAINED HEREIN IS DEEMED TO BE CONFIDENTIAL, PROPRIETARY, AND A TRADE SECRET OF TESLA MOTORS. T
NOT BE USED, REPRODUCED, OR DISCLOSED AS THE DIRECT OR INDIRECT BASIS FOR THE DEVELOPMENT, MANUFACTURE, OR SALE
PRODUCTS WITHOUT THE EXPRESSO WRITTEN CONSENT OF TESLA MOTORS.

PROGRAM	RELEASED
Model 3 SOP9	Oct 2025
NAME	SHEET
Headliner	28 OF 57

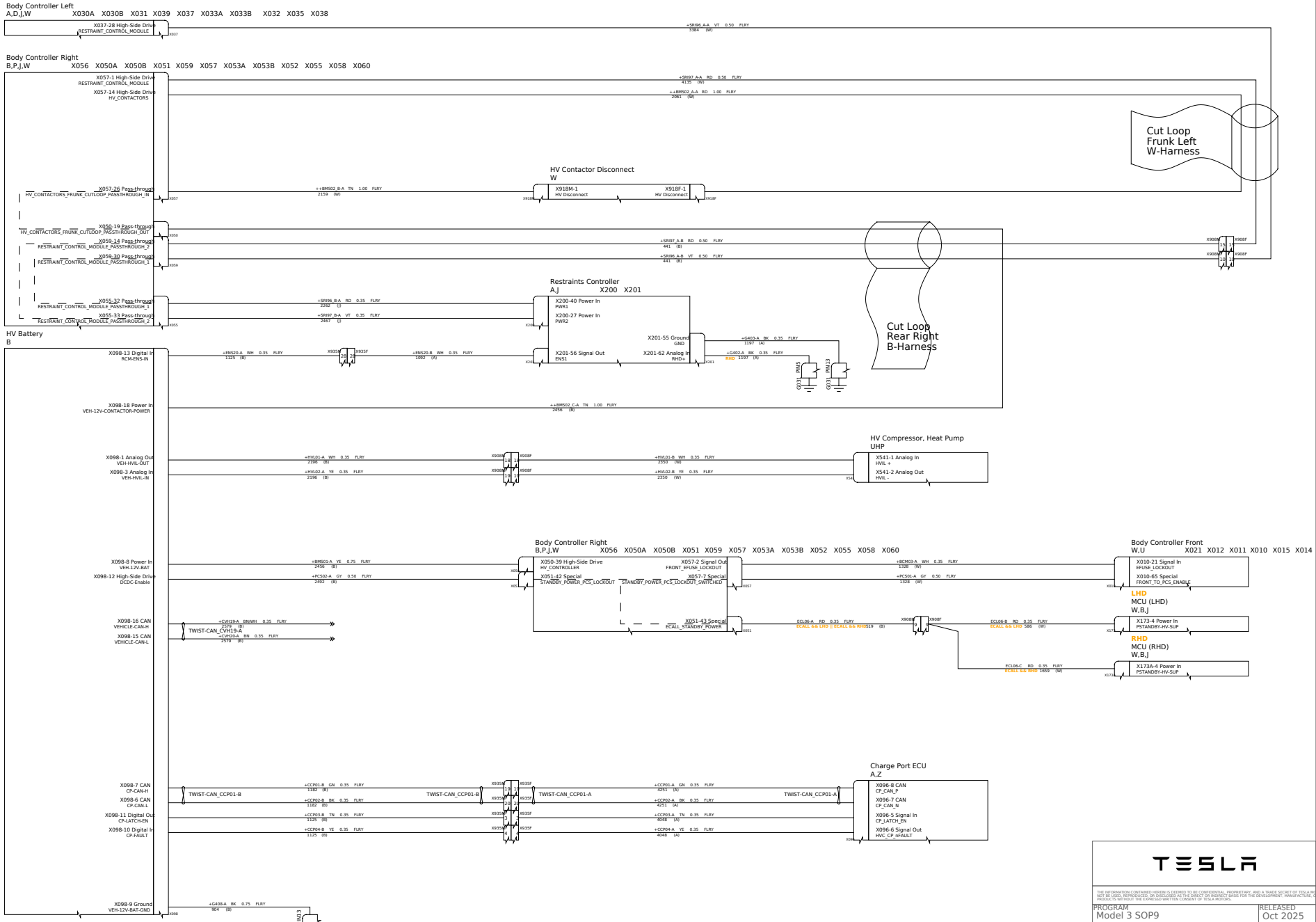

TESLA

THE INFORMATION CONTAINED HEREIN IS DEEMED TO BE CONFIDENTIAL, PROPRIETARY, AND A TRADE SECRET OF TESLA MOTORS. T
NOT BE USED, REPRODUCED, OR DISCLOSED AS THE DIRECT OR INDIRECT BASIS FOR THE DEVELOPMENT, MANUFACTURE, OR SALE
PRODUCTS WITHOUT THE EXPRESSO WRITTEN CONSENT OF TESLA MOTORS.

PROGRAM	RELEASED
Model 3 SOP9	Oct 2025
NAME	SHEET
HV Battery and HVIL	29 OF 57

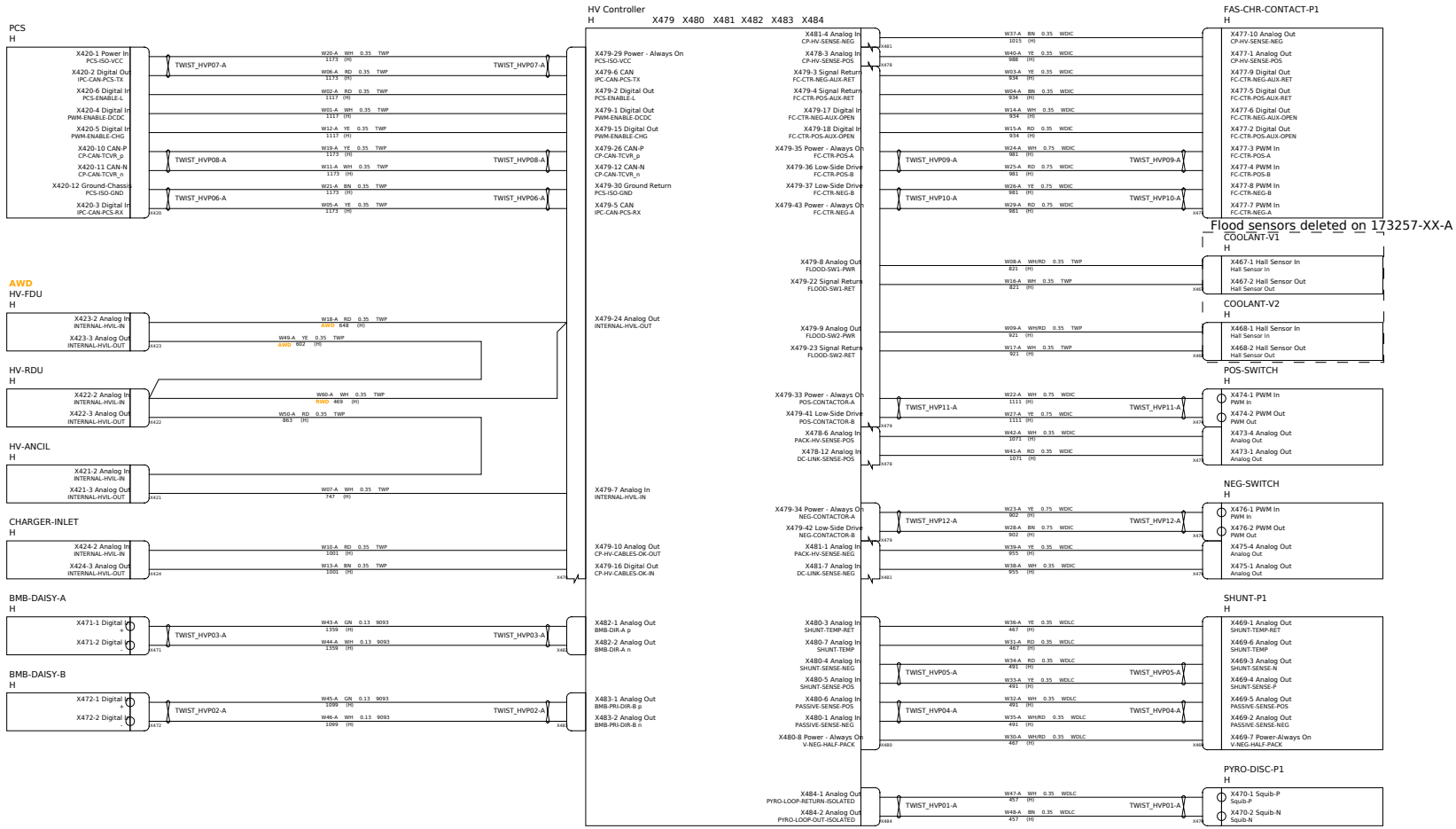

TESLA

THE INFORMATION CONTAINED HEREIN IS DEEMED TO BE CONFIDENTIAL, PROPRIETARY, AND A TRADE SECRET OF TESLA MOTORS. T
NOT BE USED, REPRODUCED, OR DISCLOSED AS THE DIRECT OR INDIRECT BASIS FOR THE DEVELOPMENT, MANUFACTURE, OR SALE
PRODUCTS WITHOUT THE EXPRESSO WRITTEN CONSENT OF TESLA MOTORS.

PROGRAM	RELEASED
Model 3 SOP9	Oct 2025
NAME	SHEET
HV Penthouse - PCS	30 OF 57

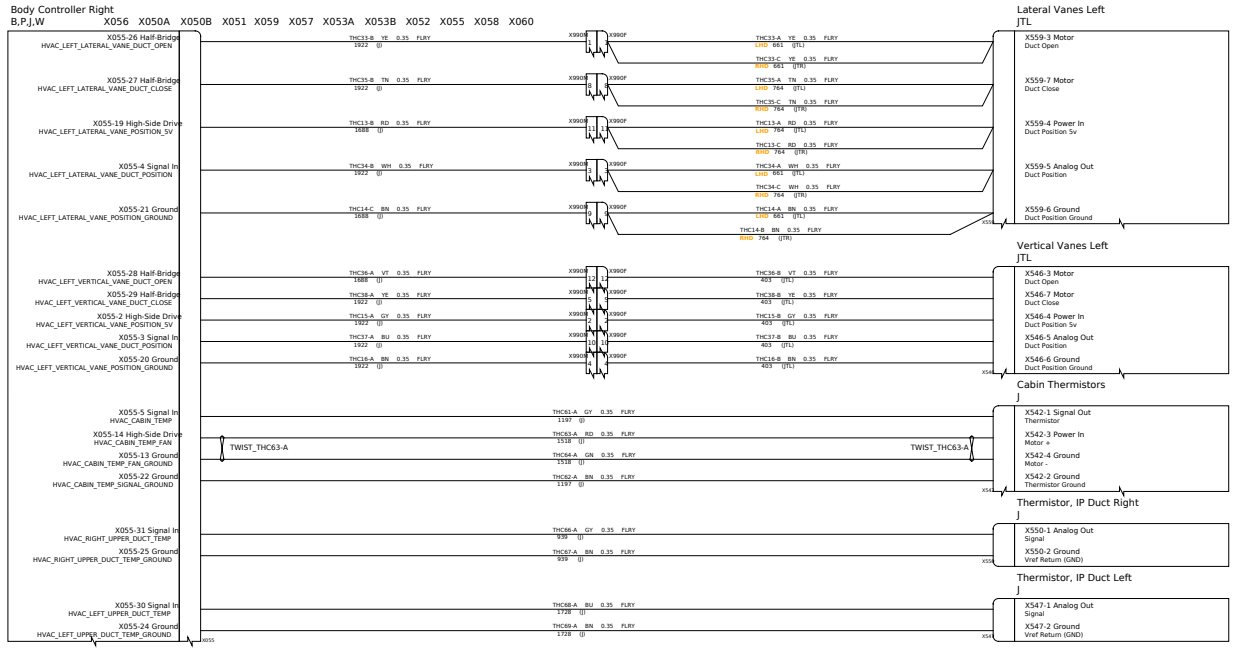

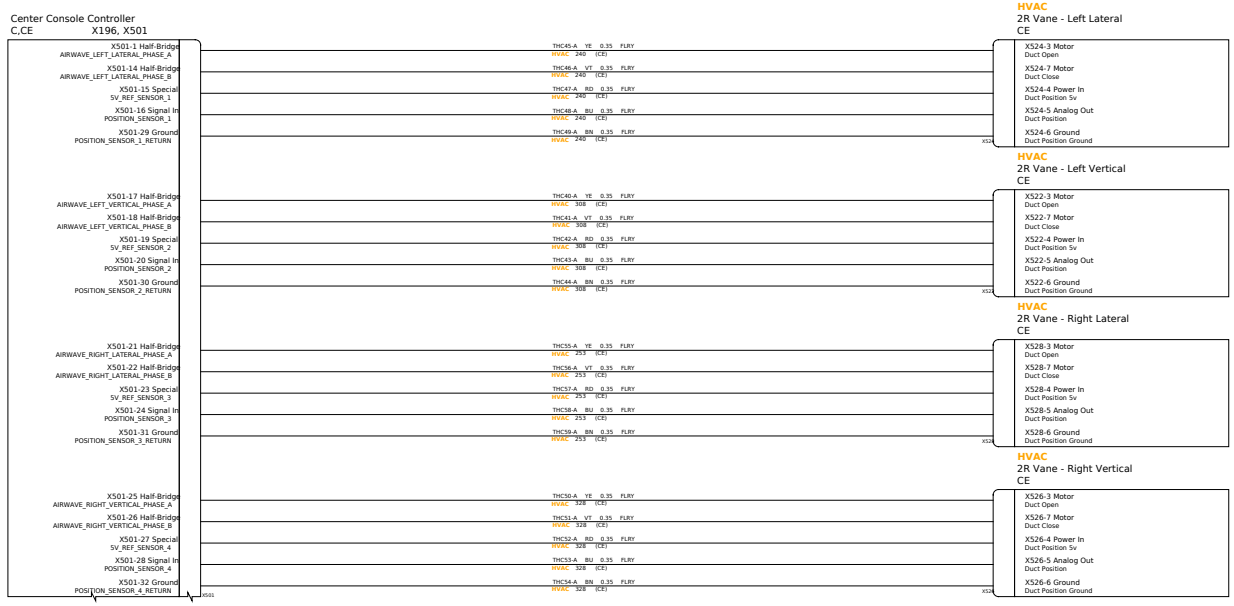

NOTE: BN colored ground circuits in X501
may be interchanged.

TESLA

THE INFORMATION CONTAINED HEREIN IS DEEMED TO BE CONFIDENTIAL, PROPRIETARY, AND A TRADE SECRET OF TESLA MOTORS. T
NOT BE USED, REPRODUCED, OR DISCLOSED AS THE DIRECT OR INDIRECT BASIS FOR THE DEVELOPMENT, MANUFACTURE, OR SALE
PRODUCTS WITHOUT THE EXPRESSO WRITTEN CONSENT OF TESLA MOTORS.

PROGRAM Model 3 SOP9	RELEASED Oct 2025
NAME HVAC - Cabin	SHEET 31 OF 57

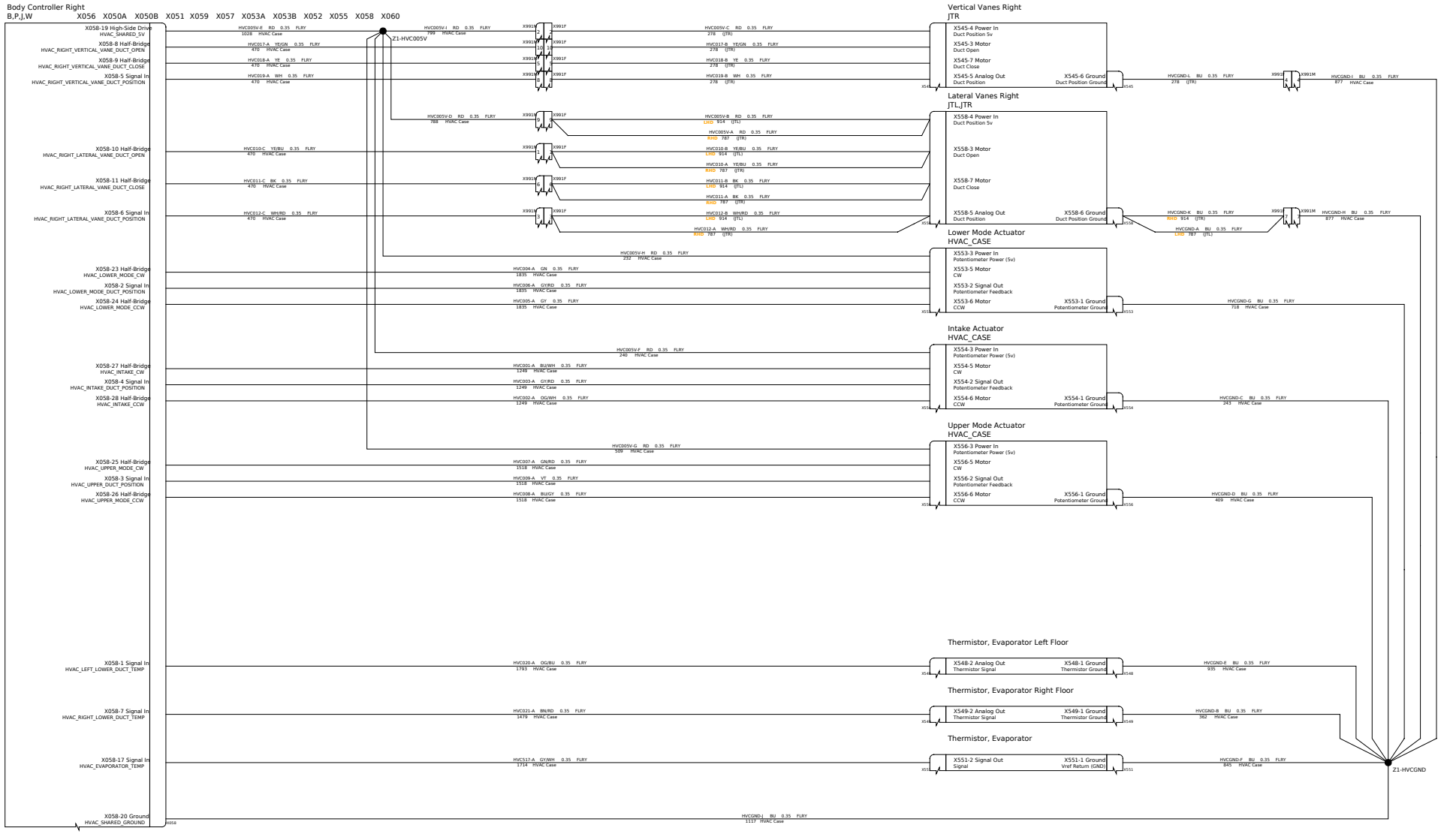

THE INFORMATION CONTAINED HEREIN IS DEEMED TO BE CONFIDENTIAL, PROPRIETARY, AND A TRADE SECRET OF TESLA MOTORS. T
NOT BE USED, REPRODUCED, OR DISCLOSED AS THE DIRECT OR INDIRECT BASIS FOR THE DEVELOPMENT, MANUFACTURE, OR SALE
PRODUCTS WITHOUT THE EXPRESSO WRITTEN CONSENT OF TESLA MOTORS.

PROGRAM	RELEASED
Model 3 SOP9	Oct 2025
NAME	SHEET
HVAC - Case Subassembly	32 OF 57

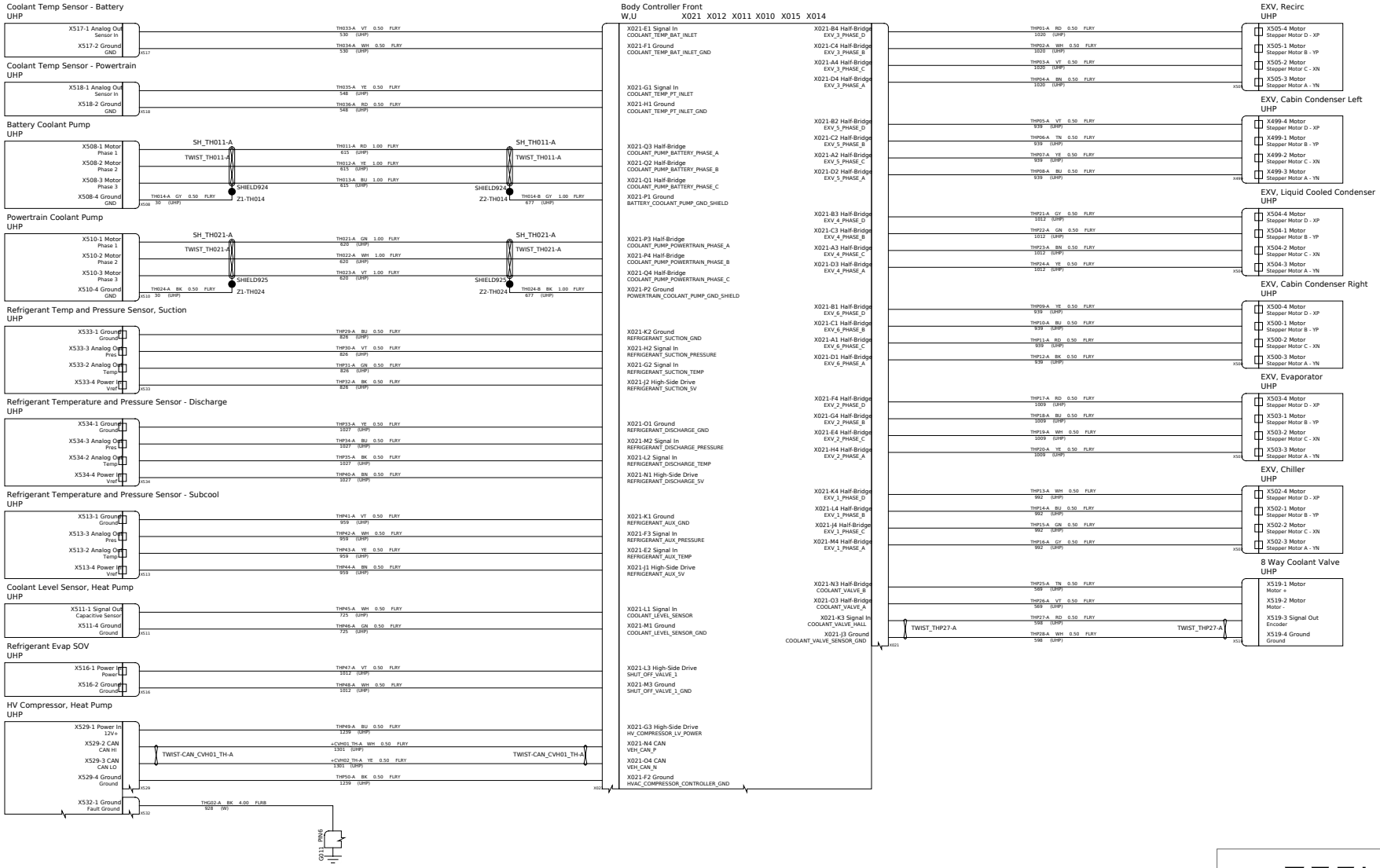

TESLA

THE INFORMATION CONTAINED HEREIN IS DEEMED TO BE CONFIDENTIAL, PROPRIETARY, AND A TRADE SECRET OF TESLA MOTORS. T
NOT BE USED, REPRODUCED, OR DISCLOSED AS THE DIRECT OR INDIRECT BASIS FOR THE DEVELOPMENT, MANUFACTURE, OR SALE
PRODUCTS WITHOUT THE EXPRESSO WRITTEN CONSENT OF TESLA MOTORS.

PROGRAM Model 3 SOP9	RELEASED Oct 2025
NAME HVAC - Heat Pump	SHEET 33 OF 57

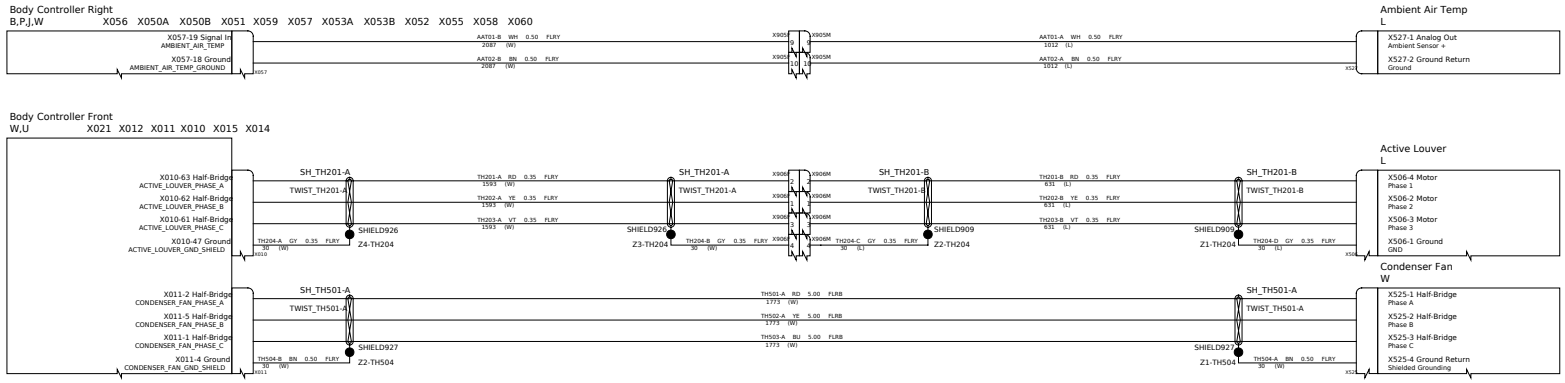

TESLA

THE INFORMATION CONTAINED HEREIN IS DEEMED TO BE CONFIDENTIAL, PROPRIETARY, AND A TRADE SECRET OF TESLA MOTORS. T
NOT BE USED, REPRODUCED, OR DISCLOSED AS THE DIRECT OR INDIRECT BASIS FOR THE DEVELOPMENT, MANUFACTURE, OR SALE
PRODUCTS WITHOUT THE EXPRESSO WRITTEN CONSENT OF TESLA MOTORS.

PROGRAM	RELEASED
Model 3 SOP9	Oct 2025
NAME	SHEET
HVAC - Powertrain	34 OF 57

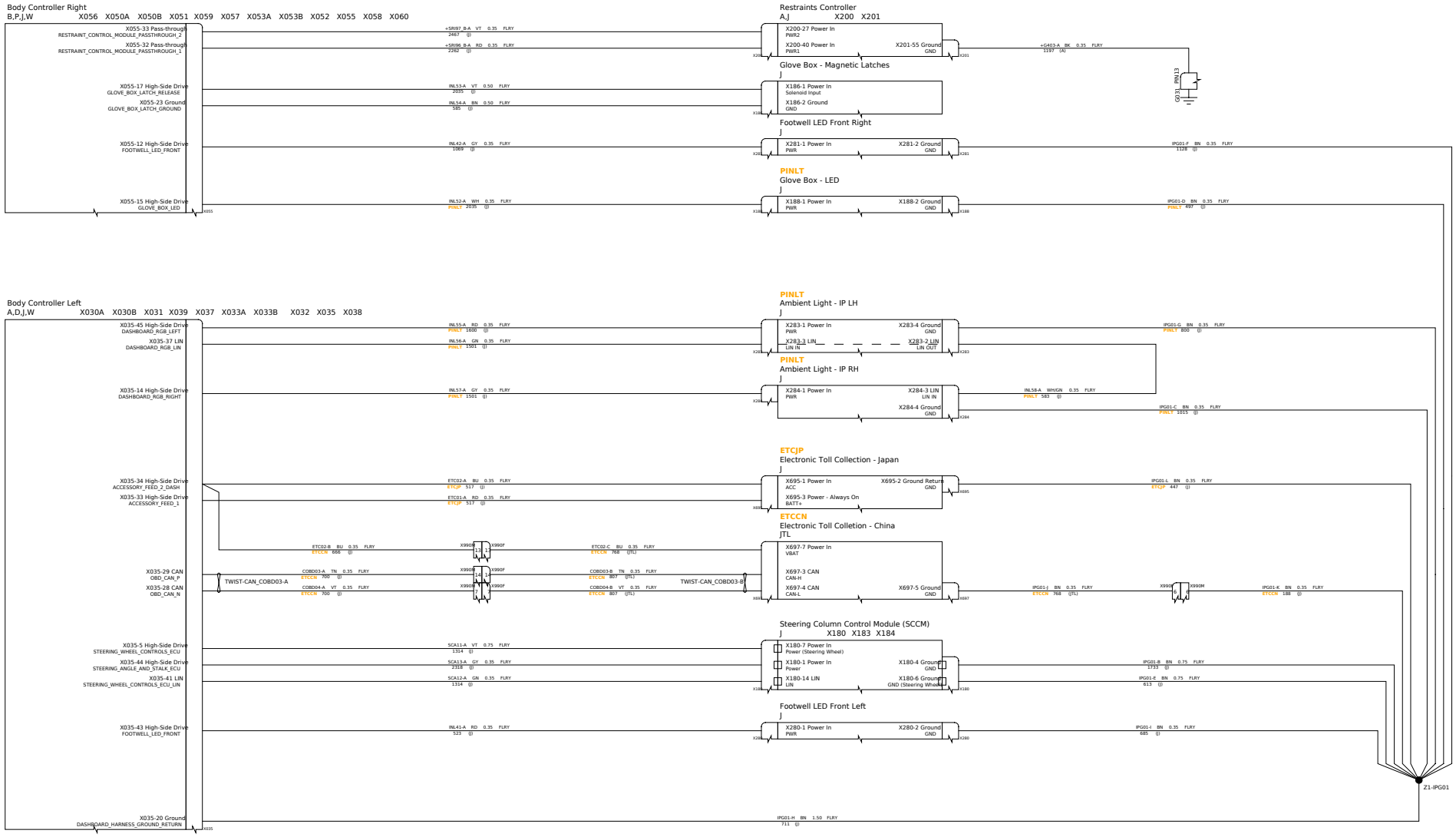

TESLA

THE INFORMATION CONTAINED HEREIN IS DEEMED TO BE CONFIDENTIAL, PROPRIETARY, AND A TRADE SECRET OF TESLA MOTORS. T
NOT BE USED, REPRODUCED, OR DISCLOSED AS THE DIRECT OR INDIRECT BASIS FOR THE DEVELOPMENT, MANUFACTURE, OR SALE
PRODUCTS WITHOUT THE EXPRESSO WRITTEN CONSENT OF TESLA MOTORS.

PROGRAM	RELEASED
Model 3 SOP9	Oct 2025
NAME	SHEET
Instrument Panel	35 OF 57

THE INFORMATION CONTAINED HEREIN IS DEEMED TO BE CONFIDENTIAL, PROPRIETARY, AND A TRADE SECRET OF TESLA MOTORS. T
NOT BE USED, REPRODUCED, OR DISCLOSED AS THE DIRECT OR INDIRECT BASIS FOR THE DEVELOPMENT, MANUFACTURE, OR SALE
PRODUCTS WITHOUT THE EXPRESSO WRITTEN CONSENT OF TESLA MOTORS.

PROGRAM	RELEASED
Model 3 SOP9	Oct 2025
NAME	SHEET
Liftgate Actuators / Sensors	36 OF 57

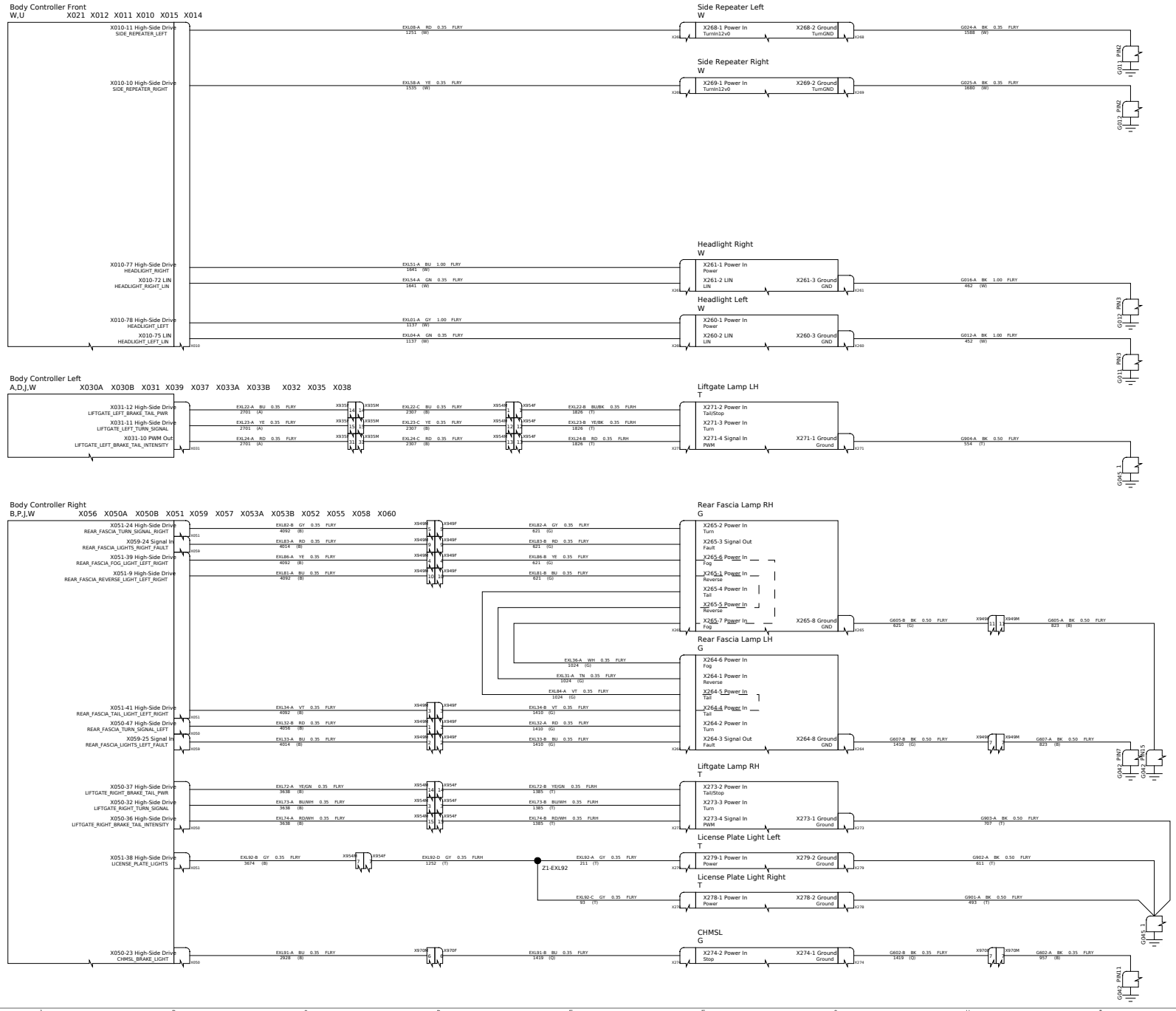

TESLA

THE INFORMATION CONTAINED HEREIN IS DEEMED TO BE CONFIDENTIAL, PROPRIETARY, AND A TRADE SECRET OF TESLA MOTORS. T
NOT BE USED, REPRODUCED, OR DISCLOSED AS THE DIRECT OR INDIRECT BASIS FOR THE DEVELOPMENT, MANUFACTURE, OR SALE
PRODUCTS WITHOUT THE EXPRESSO WRITTEN CONSENT OF TESLA MOTORS.

PROGRAM Model 3 SOP9	RELEASED Oct 2025
NAME Lights Exterior	SHEET 37 OF 57

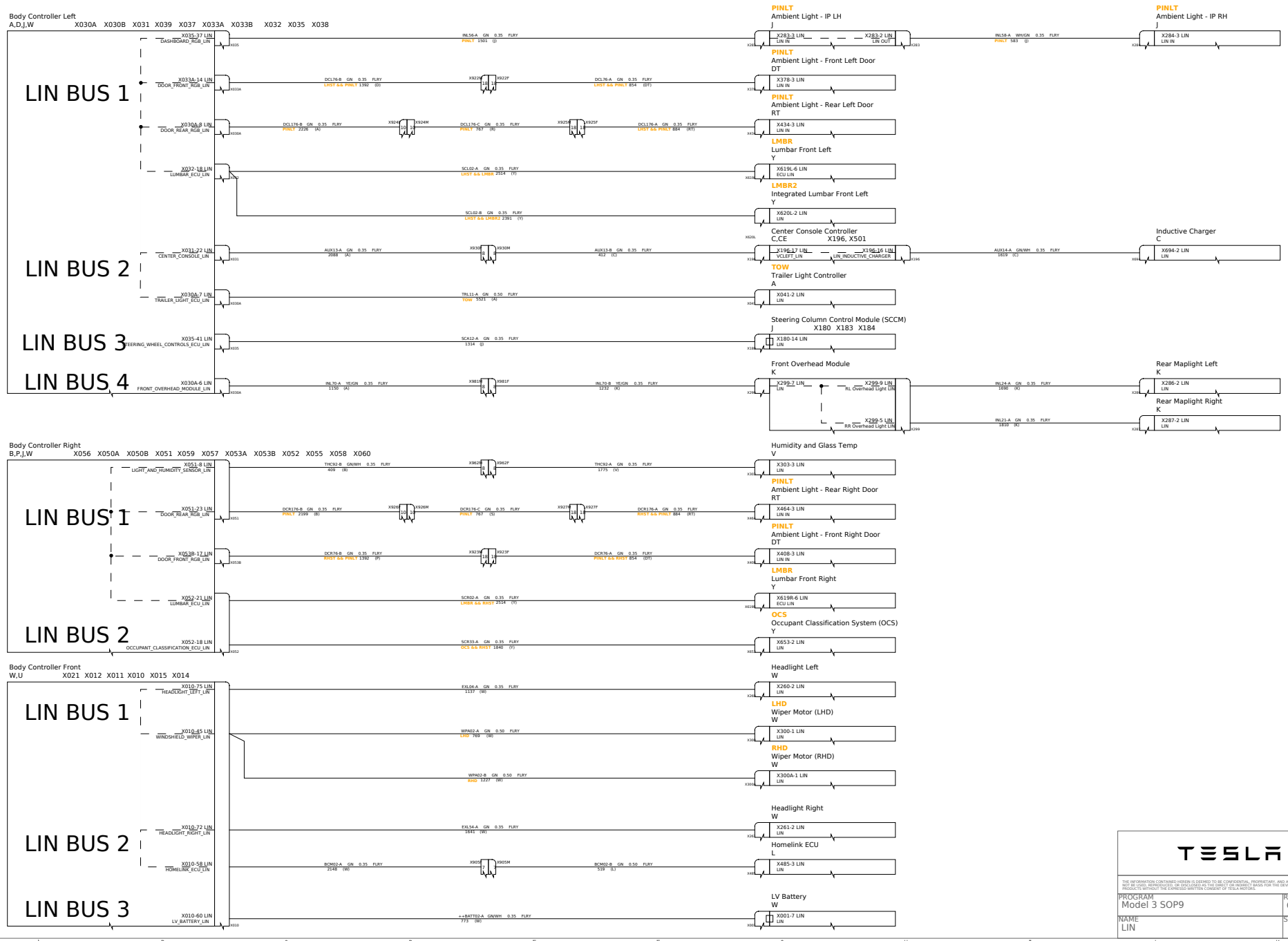

TESLA

THE INFORMATION CONTAINED HEREIN IS DEEMED TO BE CONFIDENTIAL, PROPRIETARY, AND A TRADE SECRET OF TESLA MOTORS. T
NOT BE USED, REPRODUCED, OR DISCLOSED AS THE DIRECT OR INDIRECT BASIS FOR THE DEVELOPMENT, MANUFACTURE, OR SALE
PRODUCTS WITHOUT THE EXPRESSO WRITTEN CONSENT OF TESLA MOTORS.

PROGRAM Model 3 SOP9	RELEASED Oct 2025
NAME LIN	SHEET 38 OF 57

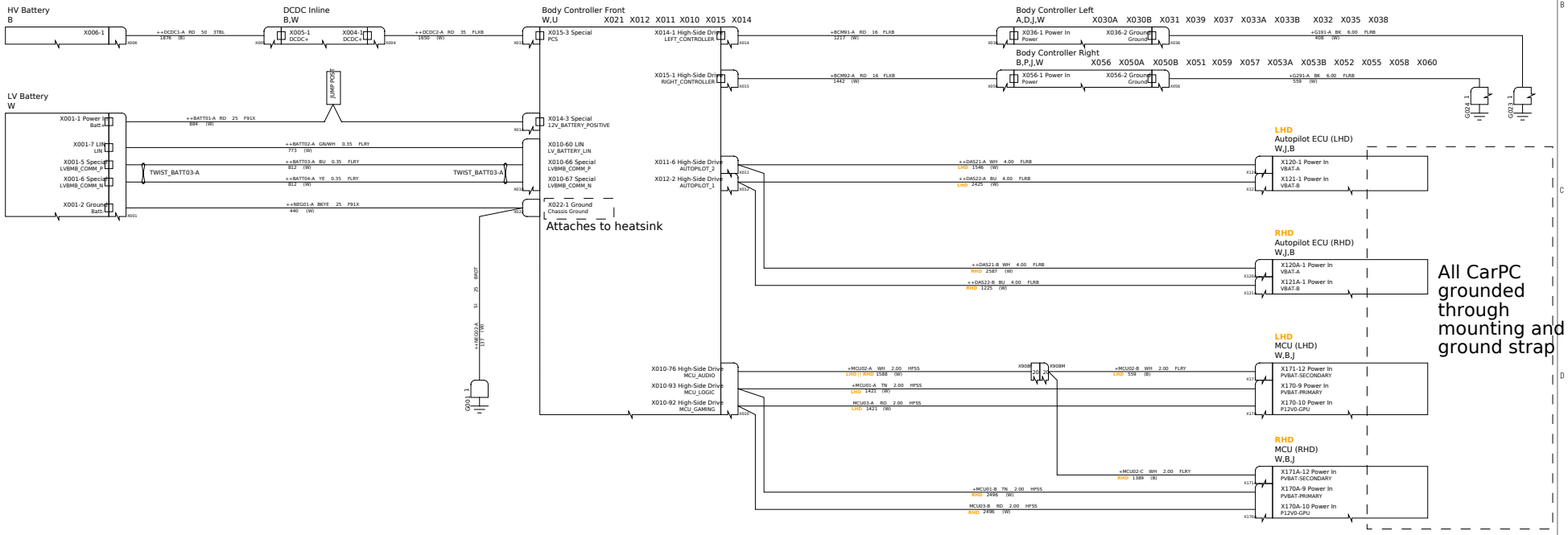

TESLA

THE INFORMATION CONTAINED HEREIN IS DEEMED TO BE CONFIDENTIAL, PROPRIETARY, AND A TRADE SECRET OF TESLA MOTORS. T
NOT BE USED, REPRODUCED, OR DISCLOSED AS THE DIRECT OR INDIRECT BASIS FOR THE DEVELOPMENT, MANUFACTURE, OR SALE
PRODUCTS WITHOUT THE EXPRESSO WRITTEN CONSENT OF TESLA MOTORS.

PROGRAM Model 3 SOP9	RELEASED Oct 2025
NAME Power Distribution - Main	SHEET 39 OF 57

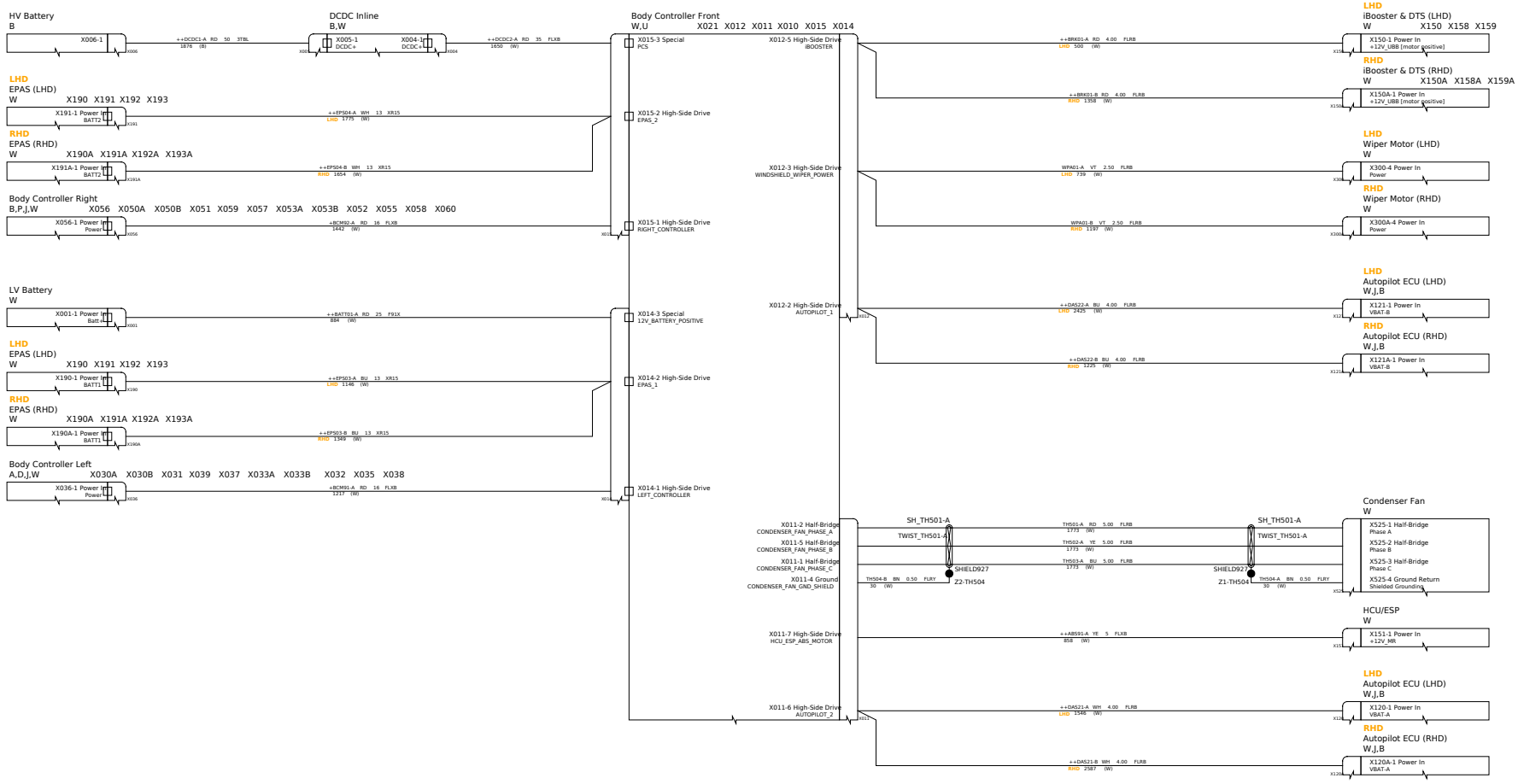

TESLA

THE INFORMATION CONTAINED HEREIN IS DEEMED TO BE CONFIDENTIAL, PROPRIETARY, AND A TRADE SECRET OF TESLA MOTORS. T
NOT BE USED, REPRODUCED, OR DISCLOSED AS THE DIRECT OR INDIRECT BASIS FOR THE DEVELOPMENT, MANUFACTURE, OR SALE
PRODUCTS WITHOUT THE EXPRESSO WRITTEN CONSENT OF TESLA MOTORS.

PROGRAM	RELEASED
Model 3 SOP9	Oct 2025
NAME	SHEET
Power Distribution - VCFront 1/2	40 OF 57

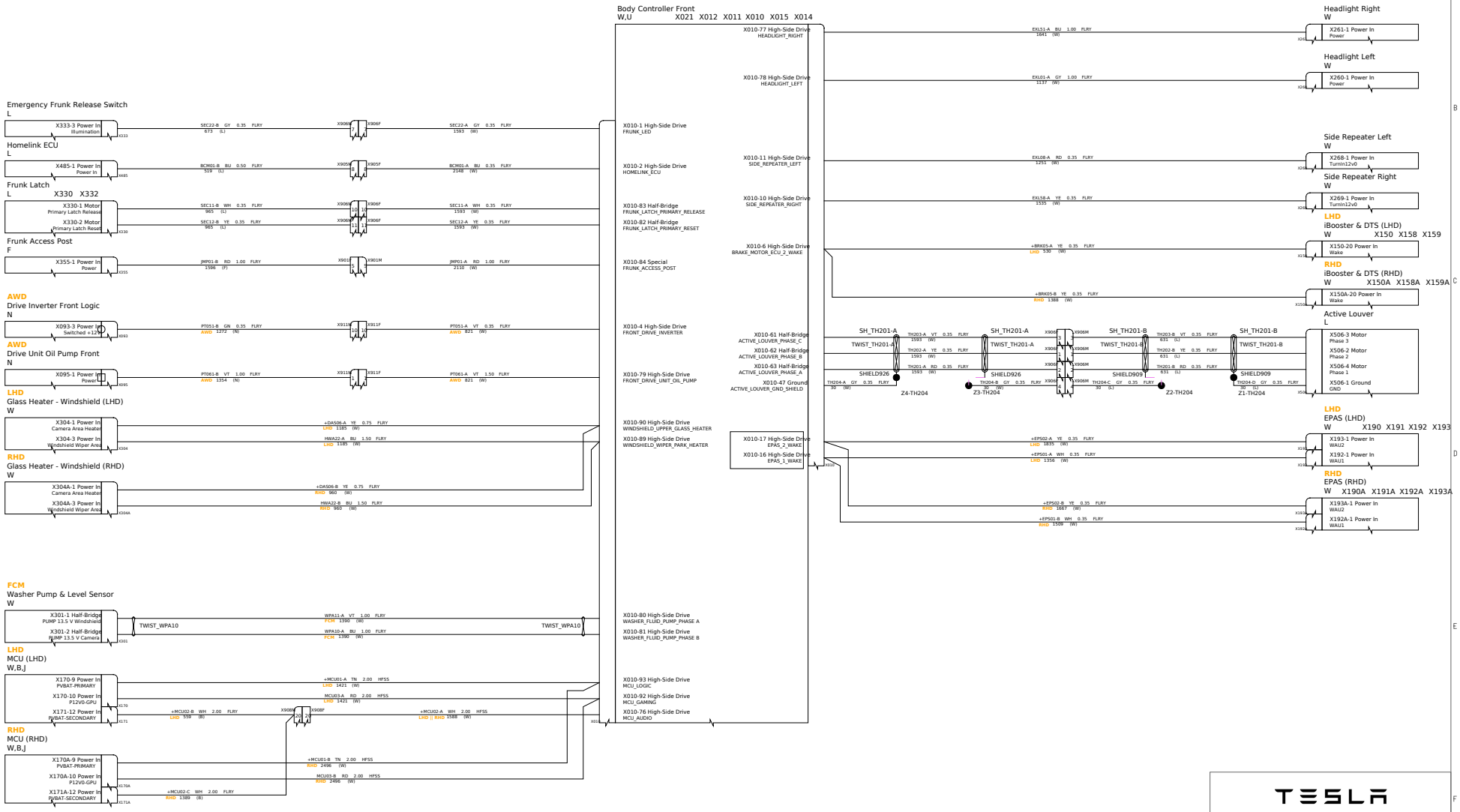

TESLA

THE INFORMATION CONTAINED HEREIN IS DEEMED TO BE CONFIDENTIAL, PROPRIETARY, AND A TRADE SECRET OF TESLA MOTORS. T
NOT BE USED, REPRODUCED, OR DISCLOSED AS THE DIRECT OR INDIRECT BASIS FOR THE DEVELOPMENT, MANUFACTURE, OR SALE
PRODUCTS WITHOUT THE EXPRESSO WRITTEN CONSENT OF TESLA MOTORS.

PROGRAM Model 3 SOP9	RELEASED Oct 2025
NAME Power Distribution - VCFront 2/2	SHEET 41 OF 57

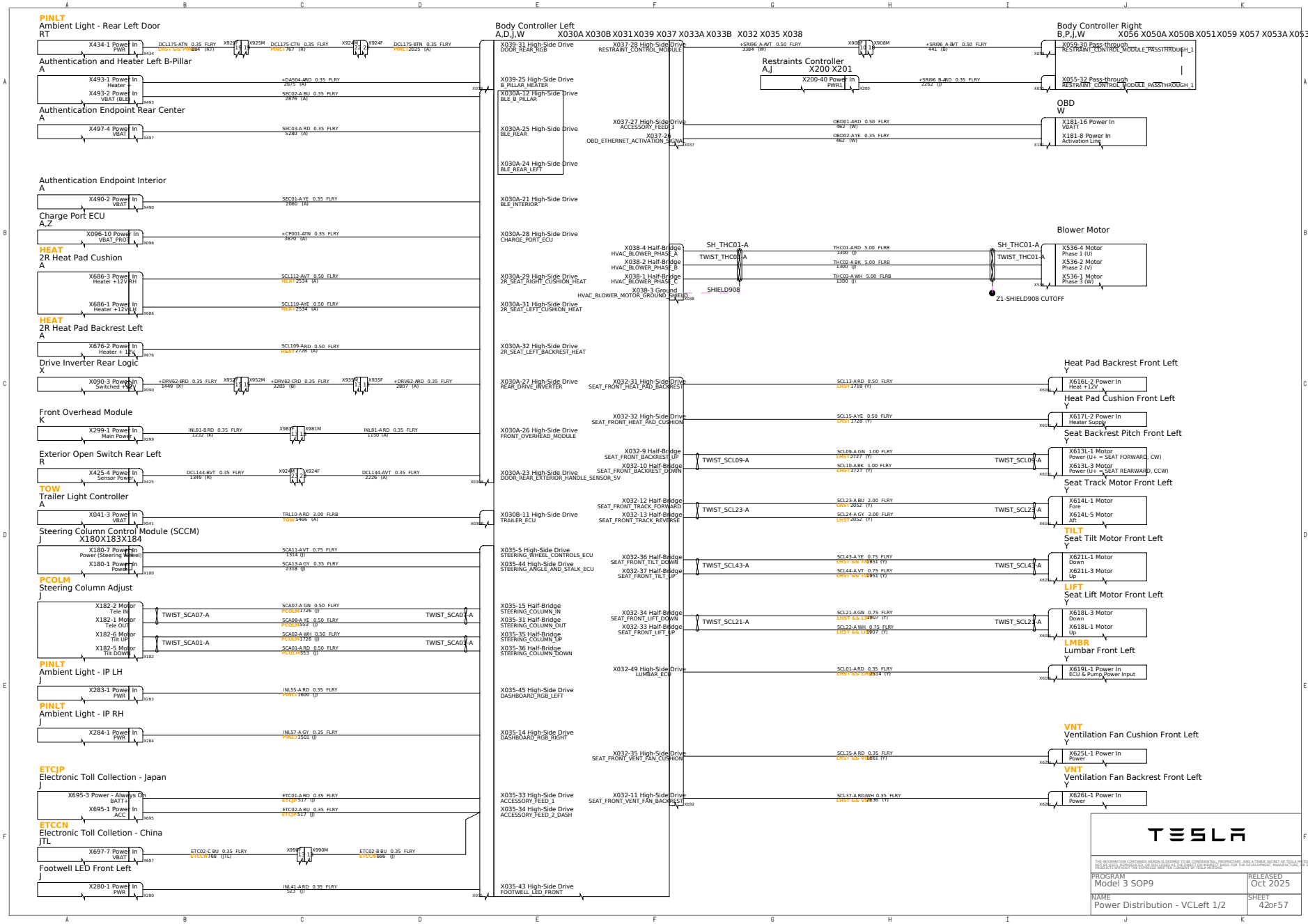
Body Controller Left
A,D,J,W
X030A X030B X031 X039 X037 X033A X033B X032 X035 X038
Body Controller Right
B,P,J,W
X056 X050A X050B X051 X059 X057 X053A X053B
PINLT
Ambient Light - Rear Left Door
RT
X434-1 Power In
PWR
DCL175-ATN 0.35 FLRY
DCL175-CTN 0.35 FLRY
DCL175-BTN 0.35 FLRY
X939-31 High-Side Drive
DOOR_REAR_RGB
X037-28 High-Side Drive
RESTRAINT_CONTROL_MODULE
+SR96 A-AVT 0.50 FLRY
+SR96 A-BVT 0.50 FLRY
X059-30 Pass-through
RESTRAINT_CONTROL_MODULE_PASSTHROUGH_1
Authentication and Heater Left B-Pillar
A
X493-1 Power In
Heater +
X493-2 Power In
VBAT (BLE)
+DAS04-ARD 0.35 FLRY
SEC02-A BU 0.35 FLRY
X039-25 High-Side Drive
B_PILLAR_HEATER
X030A-12 High-Side Drive
BLE_B_PILLAR
Restraints Controller
A,J
X200 X201
X200-40 Power In
PWR1
+SR96 B-ARD 0.35 FLRY
X055-32 Pass-through
RESTRAINT_CONTROL_MODULE_PASSTHROUGH_1
Authentication Endpoint Rear Center
A
X497-4 Power In
VBAT
SEC03-A RD 0.35 FLRY
X030A-25 High-Side Drive
BLE_REAR
X037-27 High-Side Drive
ACCESSORY_FEED_3
X037-26
OBD_ETHERNET_ACTIVATION_SIGNAL
OBD01-ARD 0.50 FLRY
OBD02-AYE 0.35 FLRY
OBD
W
X181-16 Power In
VBATT
X181-8 Power In
Activation Line
X030A-24 High-Side Drive
BLE_REAR_LEFT
Authentication Endpoint Interior
A
X490-2 Power In
VBAT
SEC01-A YE 0.35 FLRY
X030A-21 High-Side Drive
BLE_INTERIOR
Charge Port ECU
A,Z
X096-10 Power In
VBAT_PROT
+CP001-ATN 0.35 FLRY
X030A-28 High-Side Drive
CHARGE_PORT_ECU
HEAT
2R Heat Pad Cushion
A
X686-3 Power In
Heater +12V RH
SCL112-AVT 0.50 FLRY
X686-1 Power In
Heater +12V LH
SCL110-AYE 0.50 FLRY
X030A-29 High-Side Drive
2R_SEAT_RIGHT_CUSHION_HEAT
X030A-31 High-Side Drive
2R_SEAT_LEFT_CUSHION_HEAT
X038-4 Half-Bridge
HVAC_BLOWER_PHASE_A
X038-2 Half-Bridge
HVAC_BLOWER_PHASE_B
X038-1 Half-Bridge
HVAC_BLOWER_PHASE_C
X038-3 Ground
HVAC_BLOWER_MOTOR_GROUND_SHIELD
SH_THC01-A
TWIST_THC01-A
SHIELD908
THC01-ARD 5.00 FLRB
THC02-A BK 5.00 FLRB
THC03-A WH 5.00 FLRB
Blower Motor
X536-4 Motor
Phase 1 (U)
X536-2 Motor
Phase 2 (V)
X536-1 Motor
Phase 3 (W)
Z1-SHIELD908 CUTOFF
HEAT
2R Heat Pad Backrest Left
A
X676-2 Power In
Heater + 12V
SCL109-ARD 0.50 FLRY
X030A-32 High-Side Drive
2R_SEAT_LEFT_BACKREST_HEAT
Drive Inverter Rear Logic
X
X090-3 Power In
Switched +12V
+DRV62-ARD 0.35 FLRY
+DRV62-CRD 0.35 FLRY
X030A-27 High-Side Drive
REAR_DRIVE_INVERTER
X032-31 High-Side Drive
SEAT_FRONT_HEAT_PAD_BACKREST
SCL13-A RD 0.50 FLRY
Heat Pad Backrest Front Left
Y
X616L-2 Power In
Heat +12V
Front Overhead Module
K
X299-1 Power In
Main Power
INL81-B RD 0.35 FLRY
INL81-A RD 0.35 FLRY
X030A-26 High-Side Drive
FRONT_OVERHEAD_MODULE
X032-32 High-Side Drive
SEAT_FRONT_HEAT_PAD_CUSHION
SCL15-A YE 0.50 FLRY
Heat Pad Cushion Front Left
Y
X617L-2 Power In
Heater Supply
Exterior Open Switch Rear Left
R
X425-4 Power In
Sensor Power
DCL144-BVT 0.35 FLRY
DCL144-AVT 0.35 FLRY
X030A-23 High-Side Drive
DOOR_REAR_EXTERIOR_HANDLE_SENSOR_5V
X032-9 Half-Bridge
SEAT_FRONT_BACKREST_UP
X032-10 Half-Bridge
SEAT_FRONT_BACKREST_DOWN
TWIST_SCL09-A
SCL09-A GN 1.00 FLRY
SCL10-A BK 1.00 FLRY
Seat Backrest Pitch Front Left
Y
X613L-1 Motor
Power (U+ = SEAT FORWARD, CW)
X613L-3 Motor
Power (U+ = SEAT REARWARD, CCW)
TOW
Trailer Light Controller
A
X041-3 Power In
VBAT
TRL10-A RD 3.00 FLRB
X030B-11 High-Side Drive
TRAILER_ECU
X032-12 Half-Bridge
SEAT_FRONT_TRACK_FORWARD
X032-13 Half-Bridge
SEAT_FRONT_TRACK_REVERSE
TWIST_SCL23-A
SCL23-A BU 2.00 FLRY
SCL24-A GY 2.00 FLRY
Seat Track Motor Front Left
Y
X614L-1 Motor
Fore
X614L-5 Motor
Aft
Steering Column Control Module (SCCM)
J
X180 X183 X184
X180-7 Power In
Power (Steering Wheel)
X180-1 Power In
Power
SCA11-AVT 0.75 FLRY
SCA13-A GY 0.35 FLRY
X035-5 High-Side Drive
STEERING_WHEEL_CONTROLS_ECU
X035-44 High-Side Drive
STEERING_ANGLE_AND_STALK_ECU
X032-36 Half-Bridge
SEAT_FRONT_TILT_DOWN
X032-37 Half-Bridge
SEAT_FRONT_TILT_UP
TWIST_SCL43-A
SCL43-A YE 0.75 FLRY
SCL44-A VT 0.75 FLRY
TILT
Seat Tilt Motor Front Left
Y
X621L-1 Motor
Down
X621L-3 Motor
Up
PCOLM
Steering Column Adjust
J
X182-2 Motor
Tele IN
X182-1 Motor
Tele OUT
X182-6 Motor
Tilt UP
X182-5 Motor
Tilt DOWN
TWIST_SCA07-A
TWIST_SCA01-A
SCA07-A GN 0.50 FLRY
SCA08-A YE 0.50 FLRY
SCA02-A WH 0.50 FLRY
SCA01-A RD 0.50 FLRY
X035-15 Half-Bridge
STEERING_COLUMN_IN
X035-31 Half-Bridge
STEERING_COLUMN_OUT
X035-35 Half-Bridge
STEERING_COLUMN_UP
X035-36 Half-Bridge
STEERING_COLUMN_DOWN
X032-34 Half-Bridge
SEAT_FRONT_LIFT_DOWN
X032-33 Half-Bridge
SEAT_FRONT_LIFT_UP
TWIST_SCL21-A
SCL21-A GN 0.75 FLRY
SCL22-A WH 0.75 FLRY
LIFT
Seat Lift Motor Front Left
Y
X618L-3 Motor
Down
X618L-1 Motor
Up
LMBR
Lumbar Front Left
Y
X032-49 High-Side Drive
LUMBAR_ECU
SCL01-A RD 0.35 FLRY
X619L-1 Power In
ECU & Pump Power Input
PINLT
Ambient Light - IP LH
J
X283-1 Power In
PWR
INL55-A RD 0.35 FLRY
X035-45 High-Side Drive
DASHBOARD_RGB_LEFT
PINLT
Ambient Light - IP RH
J
X284-1 Power In
PWR
INL57-A GY 0.35 FLRY
X035-14 High-Side Drive
DASHBOARD_RGB_RIGHT
VNT
Ventilation Fan Cushion Front Left
Y
X032-35 High-Side Drive
SEAT_FRONT_VENT_FAN_CUSHION
SCL35-A RD 0.35 FLRY
X625L-1 Power In
Power
ETCJP
Electronic Toll Collection - Japan
J
X695-3 Power - Always On
BATT+
X695-1 Power In
ACC
ETC01-A RD 0.35 FLRY
ETC02-A BU 0.35 FLRY
X035-33 High-Side Drive
ACCESSORY_FEED_1
X035-34 High-Side Drive
ACCESSORY_FEED_2_DASH
X032-11 High-Side Drive
SEAT_FRONT_VENT_FAN_BACKREST
SCL37-A RD/WH 0.35 FLRY
VNT
Ventilation Fan Backrest Front Left
Y
X626L-1 Power In
Power
ETCCN
Electronic Toll Colletion - China
JTL
X697-7 Power In
VBAT
ETC02-C BU 0.35 FLRY
ETC02-B BU 0.35 FLRY
Footwell LED Front Left
J
X280-1 Power In
PWR
INL41-A RD 0.35 FLRY
X035-43 High-Side Drive
FOOTWELL_LED_FRONT
TESLA
THE INFORMATION CONTAINED HEREIN IS DEEMED TO BE CONFIDENTIAL, PROPRIETARY, AND A TRADE SECRET OF TESLA MOTORS. THIS INFORMATION MAY NOT BE USED, REPRODUCED, OR DISCLOSED IN THE DIRECT OR INDIRECT BASIS FOR THE DEVELOPMENT, MANUFACTURE, OR SALE OF PROCESSES OR PRODUCTS WITHOUT THE EXPRESSO WRITTEN CONSENT OF TESLA MOTORS.
PROGRAM
Model 3 SOP9
RELEASED
Oct 2025
NAME
Power Distribution - VCLeft 1/2
SHEET
42 OF 57

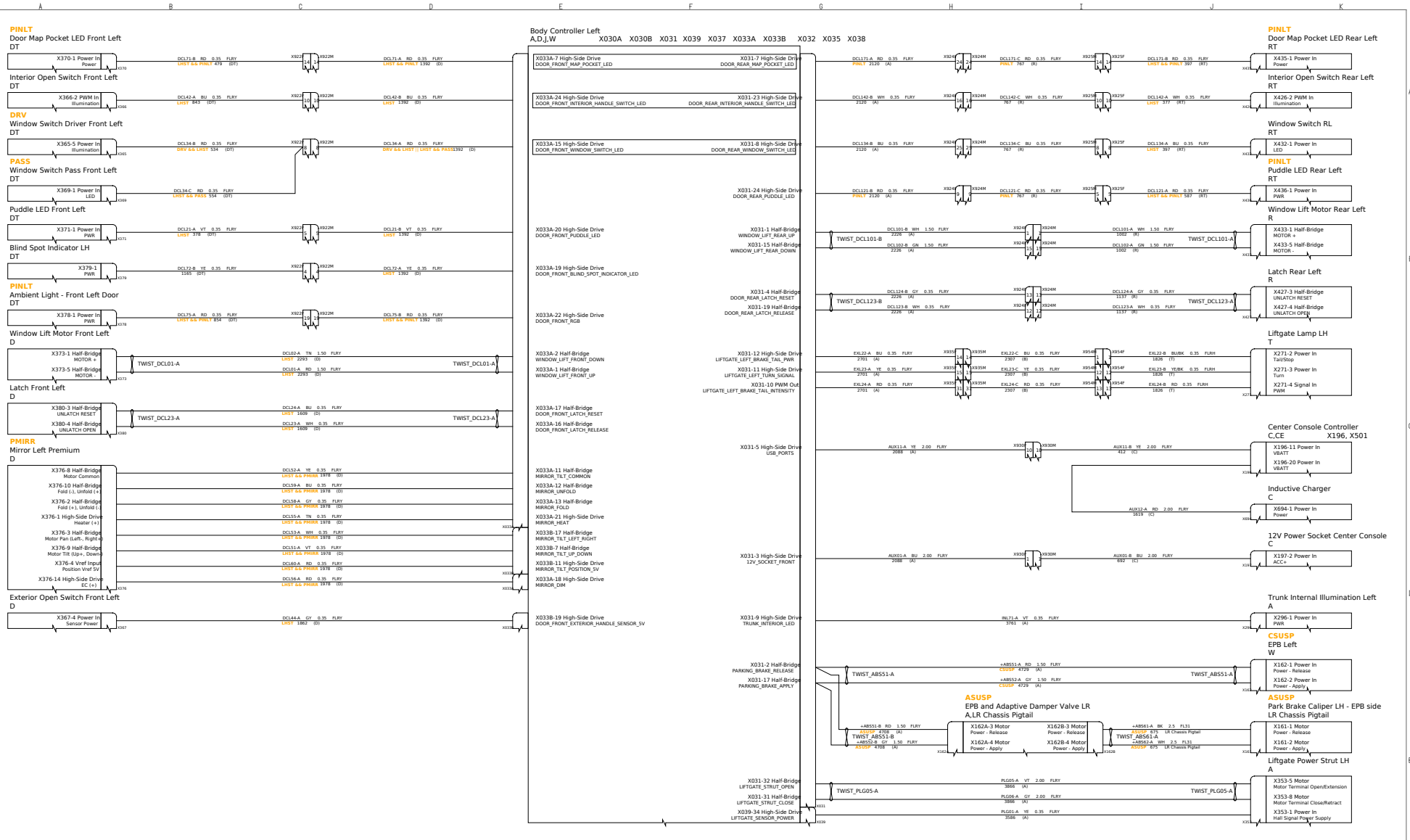

TESLA

THE INFORMATION CONTAINED HEREIN IS DEEMED TO BE CONFIDENTIAL, PROPRIETARY, AND A TRADE SECRET OF TESLA MOTORS. T
NOT BE USED, REPRODUCED, OR DISCLOSED AS THE DIRECT OR INDIRECT BASIS FOR THE DEVELOPMENT, MANUFACTURE, OR SALE
PRODUCTS WITHOUT THE EXPRESSO WRITTEN CONSENT OF TESLA MOTORS.

PROGRAM	RELEASED
Model 3 SOP9	Oct 2025
NAME	SHEET
Power Distribution - VCLeft 2/2	43 OF 57

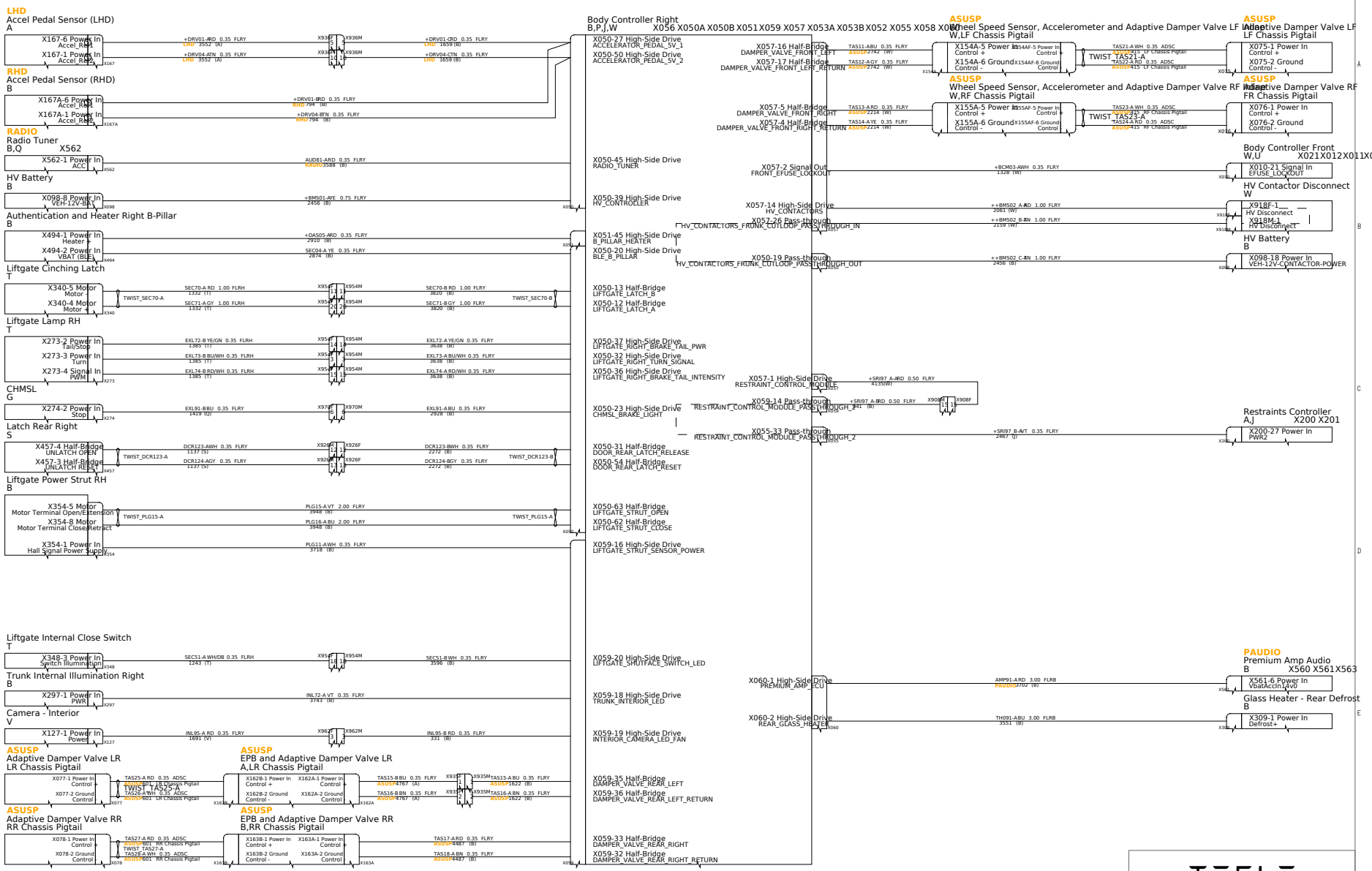

TESLA

THE INFORMATION CONTAINED HEREIN IS DEEMED TO BE CONFIDENTIAL, PROPRIETARY, AND A TRADE SECRET OF TESLA MOTORS. THIS INFORMATION MAY NOT BE USED, REPRODUCED, OR DISCLOSED AS THE DIRECT OR INDIRECT BASIS FOR THE DEVELOPMENT, MANUFACTURE, OR SALE OF PROCESSES OR PRODUCTS WITHOUT THE EXPRESSED WRITTEN CONSENT OF TESLA MOTORS.

PROGRAM	RELEASED
Model 3 SOP9	Oct 2025
NAME	SHEET
Power Distribution - VCRight 1/3	44 OF 57

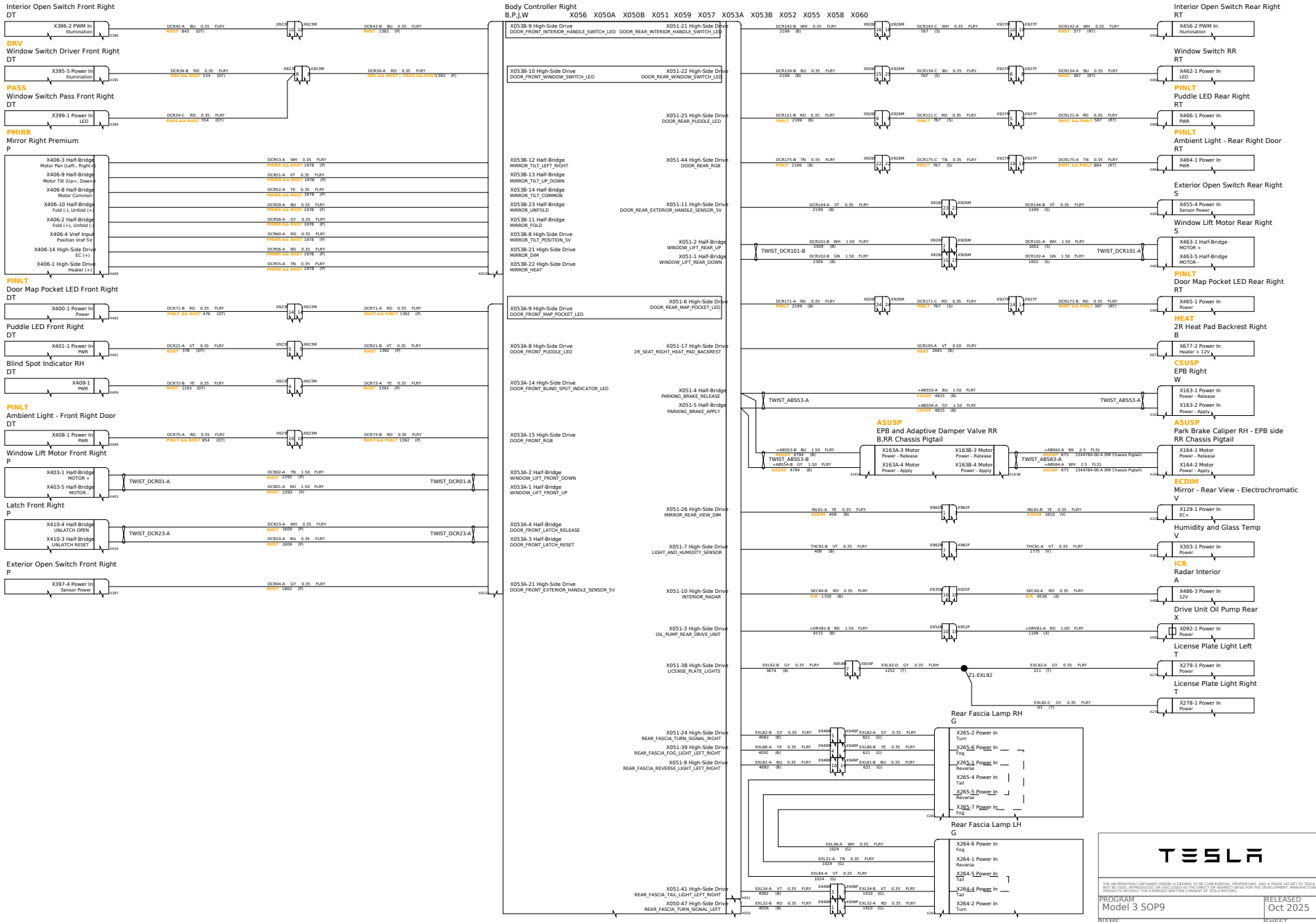

TESLA

THE INFORMATION CONTAINED HEREIN IS DEEMED TO BE CONFIDENTIAL, PROPRIETARY, AND A TRADE SECRET OF TESLA MOTORS. T
NOT BE USED, REPRODUCED, OR DISCLOSED AS THE DIRECT OR INDIRECT BASIS FOR THE DEVELOPMENT, MANUFACTURE, OR SALE
PRODUCTS WITHOUT THE EXPRESSO WRITTEN CONSENT OF TESLA MOTORS.

PROGRAM Model 3 SOP9	RELEASED Oct 2025
NAME Power Distribution - VCRight 2/3	SHEET 45 OF 57

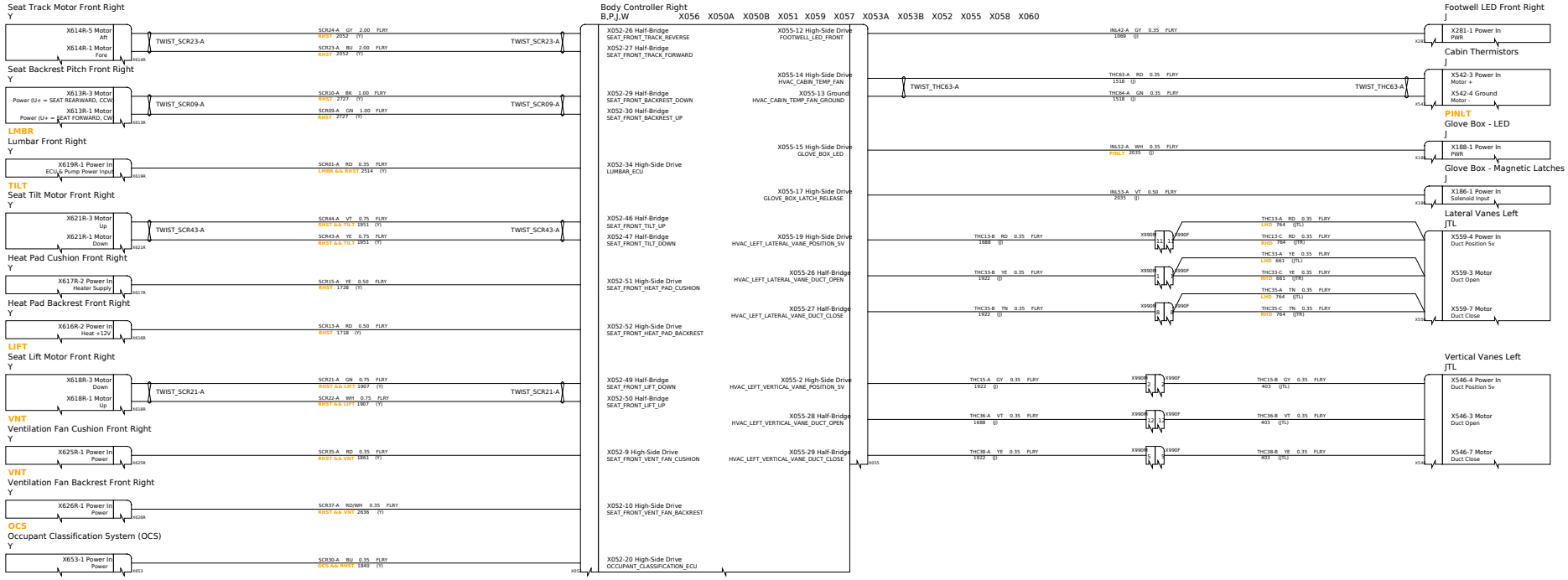

TESLA

THE INFORMATION CONTAINED HEREIN IS DEEMED TO BE CONFIDENTIAL, PROPRIETARY, AND A TRADE SECRET OF TESLA MOTORS. T
NOT BE USED, REPRODUCED, OR DISCLOSED AS THE DIRECT OR INDIRECT BASIS FOR THE DEVELOPMENT, MANUFACTURE, OR SALE
PRODUCTS WITHOUT THE EXPRESSO WRITTEN CONSENT OF TESLA MOTORS.

PROGRAM Model 3 SOP9	RELEASED Oct 2025
NAME Power Distribution - VCRight 3/3	SHEET 46 OF 57

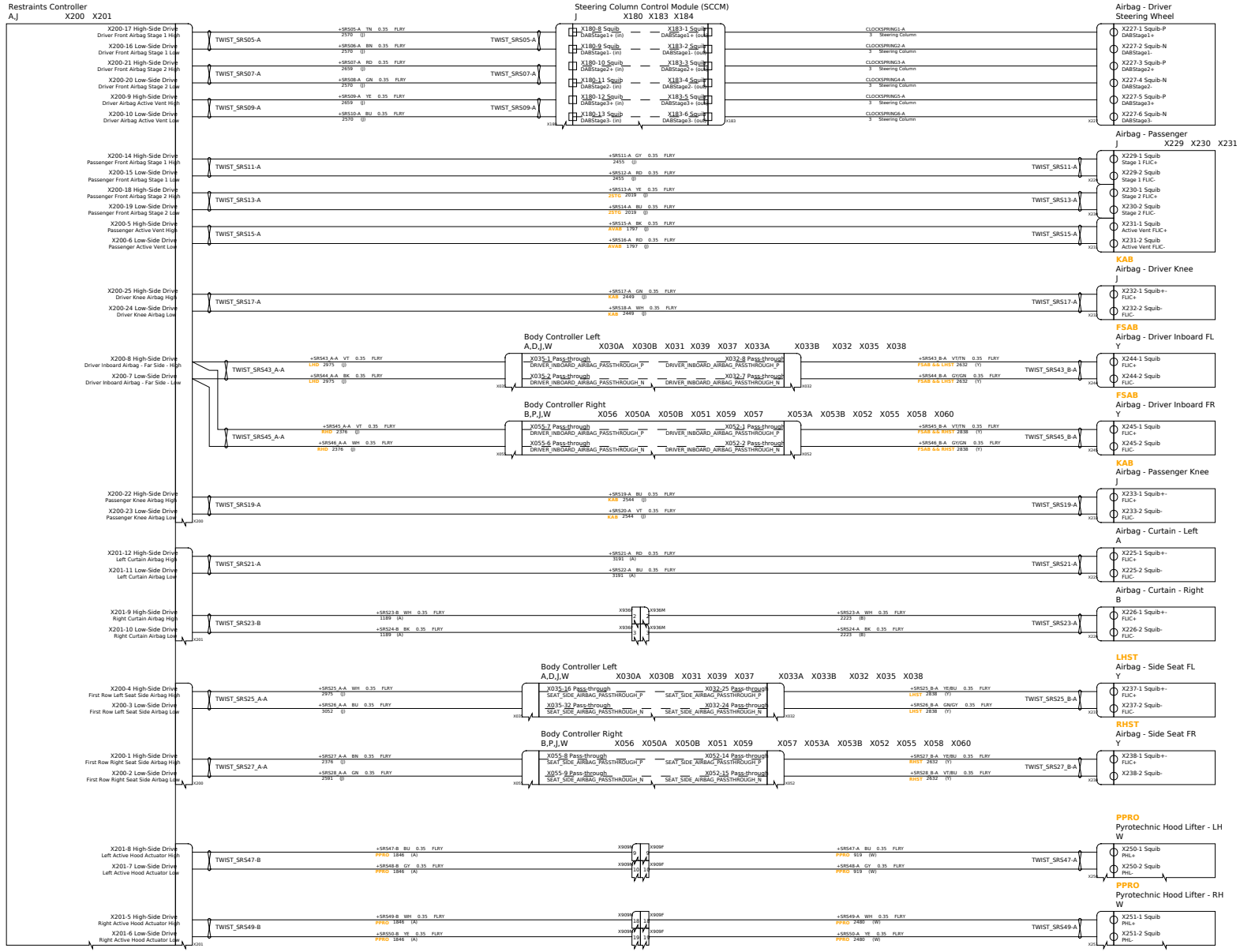

TESLA

THE INFORMATION CONTAINED HEREIN IS DEEMED TO BE CONFIDENTIAL, PROPRIETARY, AND A TRADE SECRET OF TESLA MOTORS. T
NOT BE USED, REPRODUCED, OR DISCLOSED AS THE DIRECT OR INDIRECT BASIS FOR THE DEVELOPMENT, MANUFACTURE, OR SALE
PRODUCTS WITHOUT THE EXPRESSO WRITTEN CONSENT OF TESLA MOTORS.

PROGRAM Model 3 SOP9	RELEASED Oct 2025
NAME Restraints Control Module - Airbags	SHEET 47 OF 57

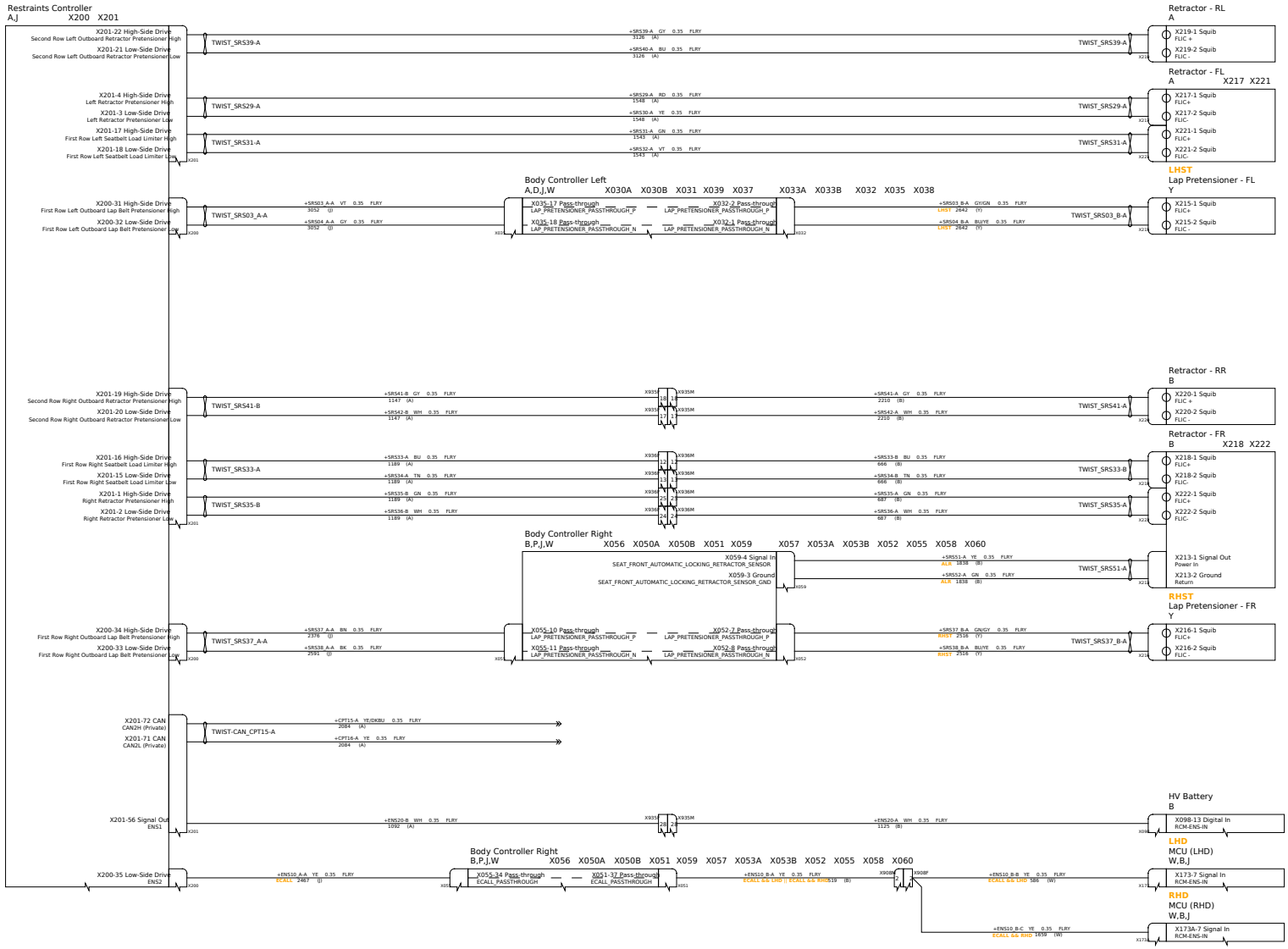

TESLA

THE INFORMATION CONTAINED HEREIN IS DEEMED TO BE CONFIDENTIAL, PROPRIETARY, AND A TRADE SECRET OF TESLA MOTORS. T
NOT BE USED, REPRODUCED, OR DISCLOSED AS THE DIRECT OR INDIRECT BASIS FOR THE DEVELOPMENT, MANUFACTURE, OR SALE
PRODUCTS WITHOUT THE EXPRESSO WRITTEN CONSENT OF TESLA MOTORS.

PROGRAM Model 3 SOP9	RELEASED Oct 2025
NAME Restraints Control Module - Seatbelts	SHEET 48 OF 57

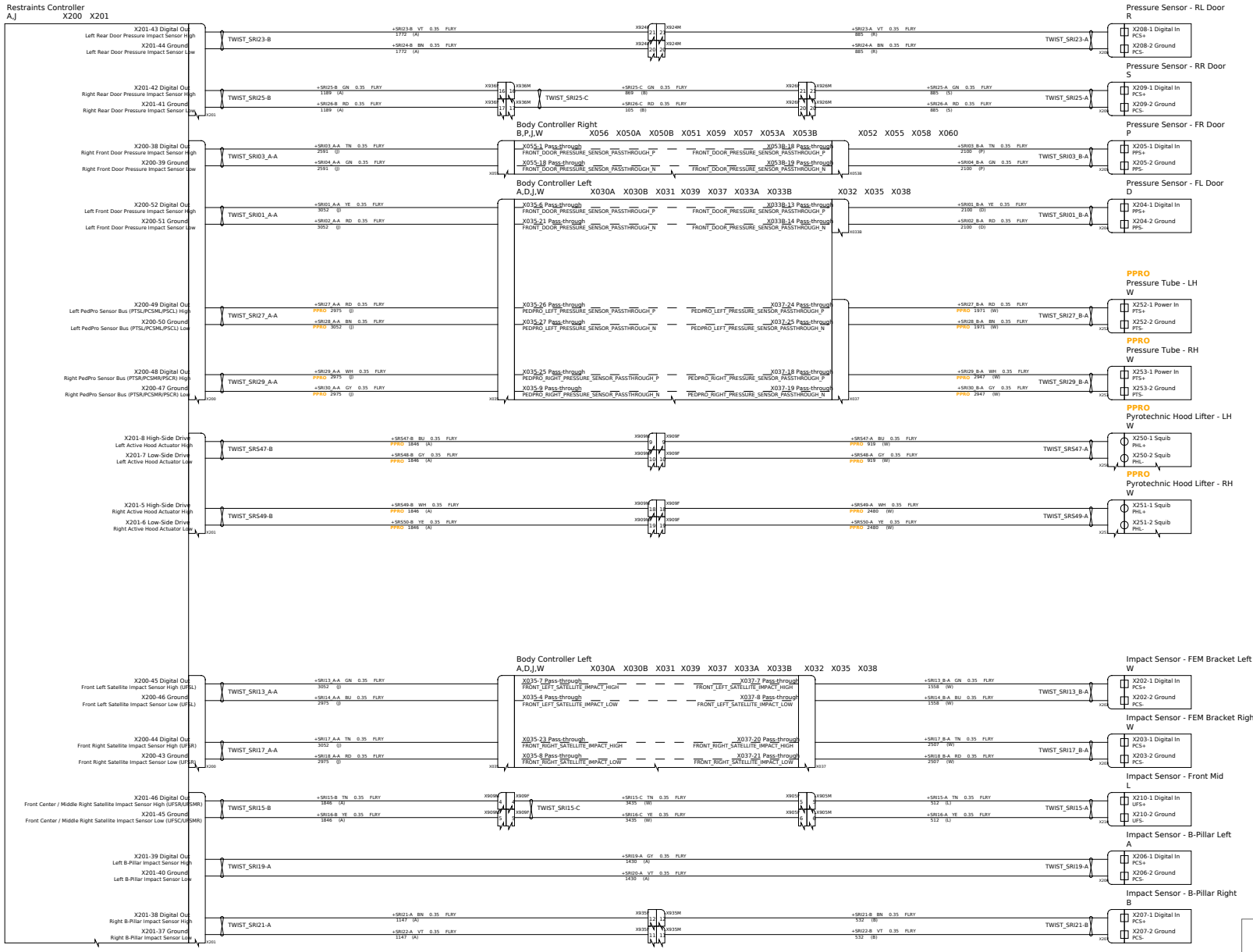

TESLA

THE INFORMATION CONTAINED HEREIN IS DEEMED TO BE CONFIDENTIAL, PROPRIETARY, AND A TRADE SECRET OF TESLA MOTORS. T
NOT BE USED, REPRODUCED, OR DISCLOSED AS THE DIRECT OR INDIRECT BASIS FOR THE DEVELOPMENT, MANUFACTURE, OR SALE
PRODUCTS WITHOUT THE EXPRESSO WRITTEN CONSENT OF TESLA MOTORS.

PROGRAM	RELEASED
Model 3 SOP9	Oct 2025
NAME	SHEET
Restraints Control Module - Sensors	49 OF 57

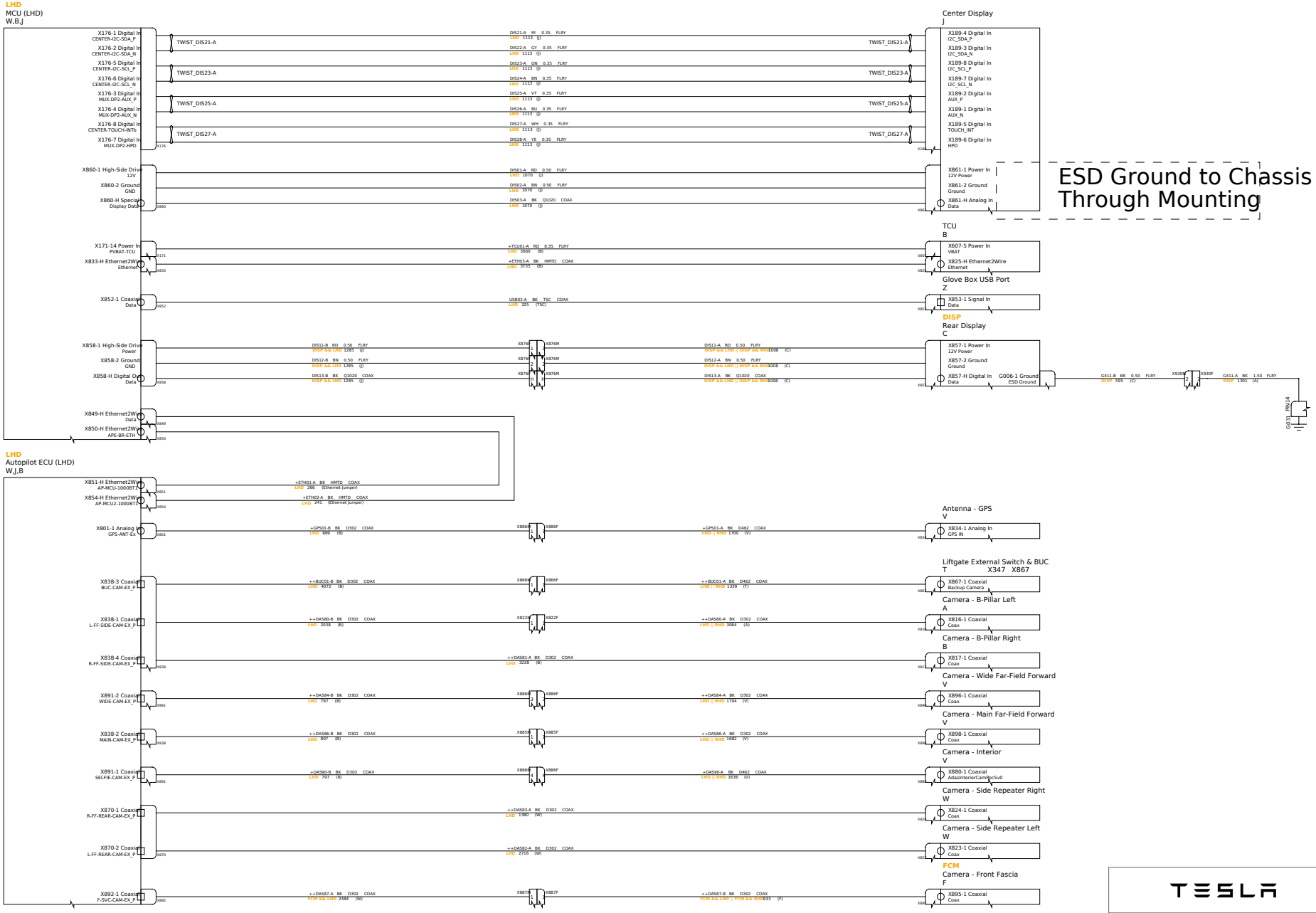

TESLA

THE INFORMATION CONTAINED HEREIN IS DEEMED TO BE CONFIDENTIAL, PROPRIETARY, AND A TRADE SECRET OF TESLA MOTORS. T
NOT BE USED, REPRODUCED, OR DISCLOSED AS THE DIRECT OR INDIRECT BASIS FOR THE DEVELOPMENT, MANUFACTURE, OR SALE
PRODUCTS WITHOUT THE EXPRESSO WRITTEN CONSENT OF TESLA MOTORS.

PROGRAM Model 3 SOP9	RELEASED Oct 2025
NAME RF/Special Cables - LHD	SHEET 50 OF 57

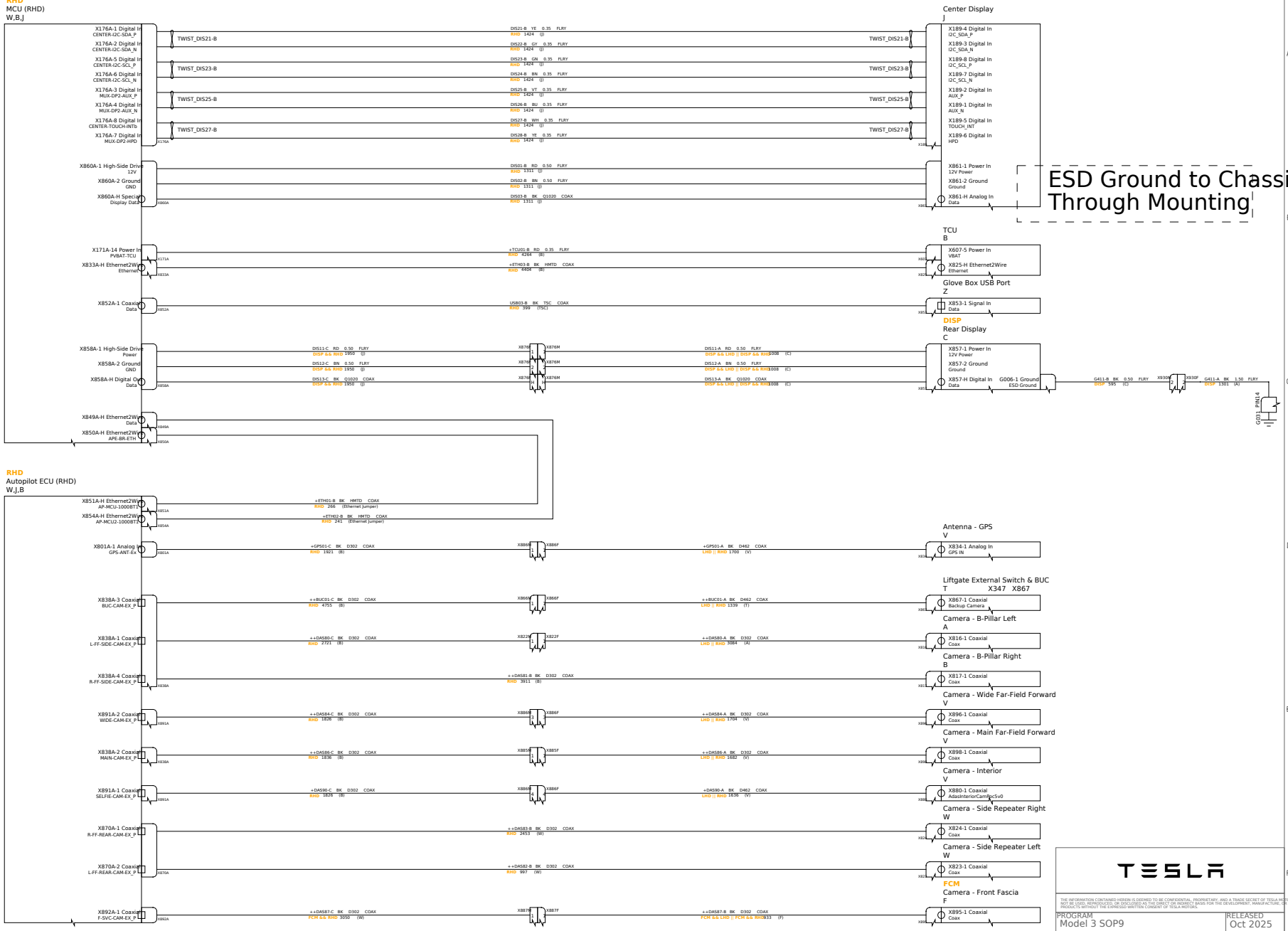

THE INFORMATION CONTAINED HEREIN IS DEEMED TO BE CONFIDENTIAL, PROPRIETARY, AND A TRADE SECRET OF TESLA MOTORS. T
NOT BE USED, REPRODUCED, OR DISCLOSED AS THE DIRECT OR INDIRECT BASIS FOR THE DEVELOPMENT, MANUFACTURE, OR SALE
PRODUCTS WITHOUT THE EXPRESSO WRITTEN CONSENT OF TESLA MOTORS.

PROGRAM	RELEASED
Model 3 SOP9	Oct 2025
NAME	SHEET
RF/Special Cables - RHD	51 OF 57

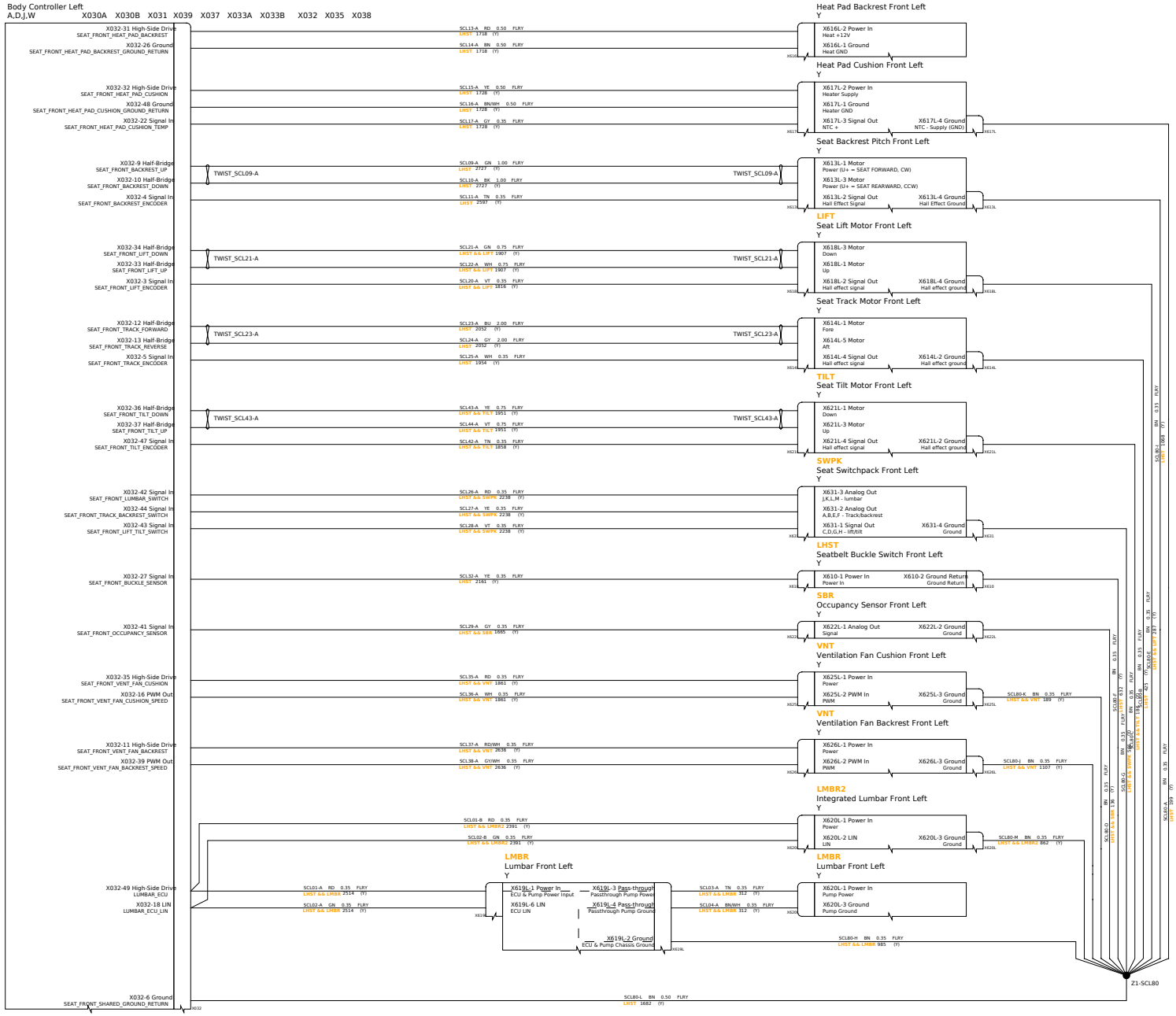

TESLA

THE INFORMATION CONTAINED HEREIN IS DEEMED TO BE CONFIDENTIAL, PROPRIETARY, AND A TRADE SECRET OF TESLA MOTORS. T
NOT BE USED, REPRODUCED, OR DISCLOSED AS THE DIRECT OR INDIRECT BASIS FOR THE DEVELOPMENT, MANUFACTURE, OR SALE
PRODUCTS WITHOUT THE EXPRESSO WRITTEN CONSENT OF TESLA MOTORS.

PROGRAM Model 3 SOP9	RELEASED Oct 2025
NAME Seats - 1R Left	SHEET 52 OF 57

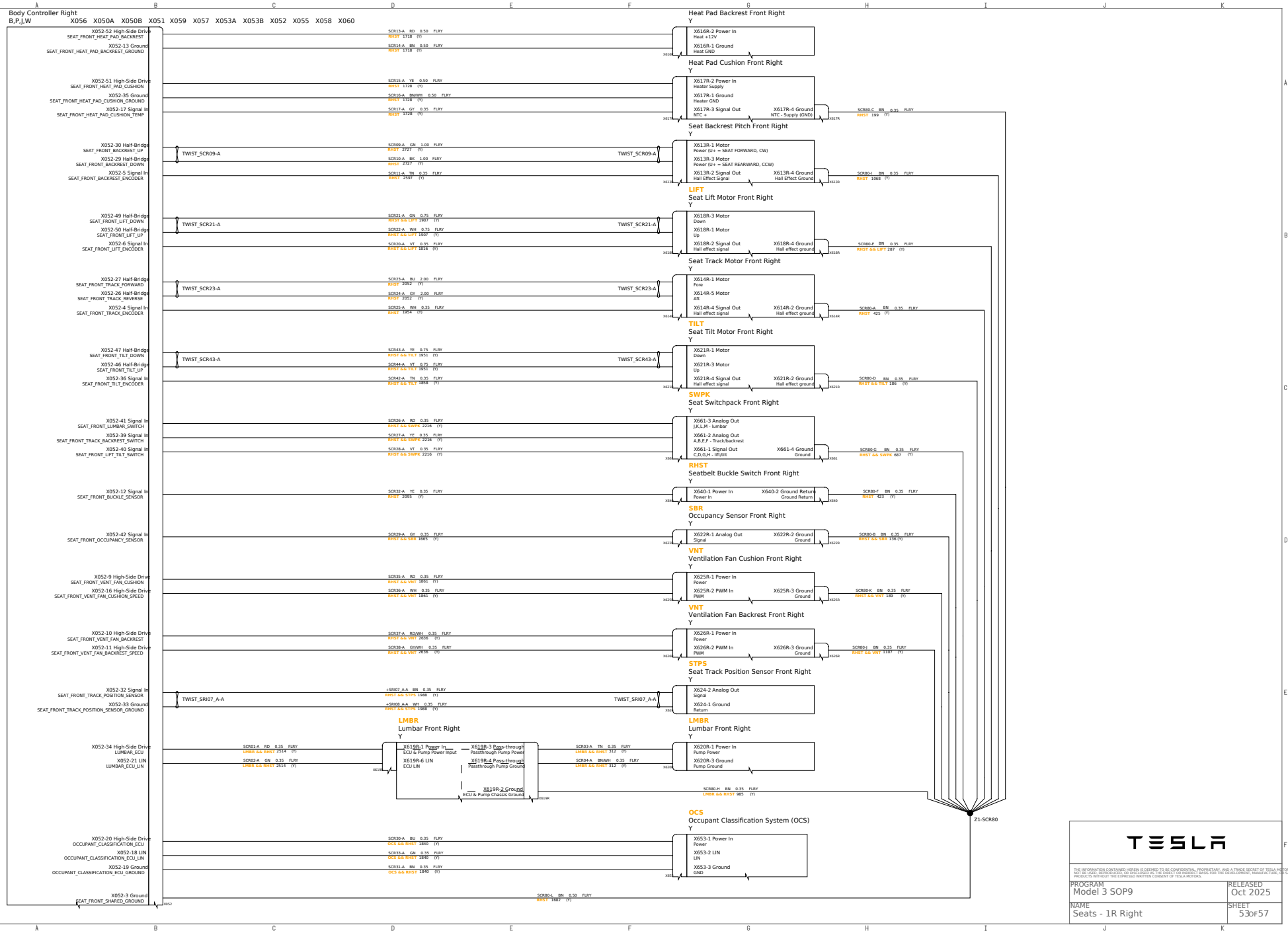
Body Controller Right
B,P,J,W
X056 X050A X050B X051 X059 X057 X053A X053B X052 X055 X058 X060
X052-52 High-Side Drive
SEAT_FRONT_HEAT_PAD_BACKREST
X052-13 Ground
SEAT_FRONT_HEAT_PAD_BACKREST_GROUND
Heat Pad Backrest Front Right
Y
X616R-2 Power In
Heat +12V
X616R-1 Ground
Heat GND
Heat Pad Cushion Front Right
Y
X052-51 High-Side Drive
SEAT_FRONT_HEAT_PAD_CUSHION
X052-35 Ground
SEAT_FRONT_HEAT_PAD_CUSHION_GROUND
X052-17 Signal In
SEAT_FRONT_HEAT_PAD_CUSHION_TEMP
X617R-2 Power In
Heater Supply
X617R-1 Ground
Heater GND
X617R-3 Signal Out
NTC +
X617R-4 Ground
NTC - Supply (GND)
Seat Backrest Pitch Front Right
Y
X052-30 Half-Bridge
SEAT_FRONT_BACKREST_UP
X052-29 Half-Bridge
SEAT_FRONT_BACKREST_DOWN
X052-5 Signal In
SEAT_FRONT_BACKREST_ENCODER
TWIST_SCR09-A
X613R-1 Motor
Power (U+ = SEAT FORWARD, CW)
X613R-3 Motor
Power (U+ = SEAT REARWARD, CCW)
X613R-2 Signal Out
Hall Effect Signal
X613R-4 Ground
Hall Effect Ground
LIFT
Seat Lift Motor Front Right
Y
X052-49 Half-Bridge
SEAT_FRONT_LIFT_DOWN
X052-50 Half-Bridge
SEAT_FRONT_LIFT_UP
X052-6 Signal In
SEAT_FRONT_LIFT_ENCODER
TWIST_SCR21-A
X618R-3 Motor
Down
X618R-1 Motor
Up
X618R-2 Signal Out
Hall effect signal
X618R-4 Ground
Hall effect ground
Seat Track Motor Front Right
Y
X052-27 Half-Bridge
SEAT_FRONT_TRACK_FORWARD
X052-26 Half-Bridge
SEAT_FRONT_TRACK_REVERSE
X052-4 Signal In
SEAT_FRONT_TRACK_ENCODER
TWIST_SCR23-A
X614R-1 Motor
Fore
X614R-5 Motor
Aft
X614R-4 Signal Out
Hall effect signal
X614R-2 Ground
Hall effect ground
TILT
Seat Tilt Motor Front Right
Y
X052-47 Half-Bridge
SEAT_FRONT_TILT_DOWN
X052-46 Half-Bridge
SEAT_FRONT_TILT_UP
X052-36 Signal In
SEAT_FRONT_TILT_ENCODER
TWIST_SCR43-A
X621R-1 Motor
Down
X621R-3 Motor
Up
X621R-4 Signal Out
Hall effect signal
X621R-2 Ground
Hall effect ground
SWPK
Seat Switchpack Front Right
Y
X052-41 Signal In
SEAT_FRONT_LUMBAR_SWITCH
X052-39 Signal In
SEAT_FRONT_TRACK_BACKREST_SWITCH
X052-40 Signal In
SEAT_FRONT_LIFT_TILT_SWITCH
X661-3 Analog Out
J,K,L,M - lumbar
X661-2 Analog Out
A,B,E,F - Track/backrest
X661-1 Signal Out
C,D,G,H - lift/tilt
X661-4 Ground
Ground
RHST
Seatbelt Buckle Switch Front Right
Y
X052-12 Signal In
SEAT_FRONT_BUCKLE_SENSOR
X640-1 Power In
Power In
X640-2 Ground Return
Ground Return
SBR
Occupancy Sensor Front Right
Y
X052-42 Signal In
SEAT_FRONT_OCCUPANCY_SENSOR
X622R-1 Analog Out
Signal
X622R-2 Ground
Ground
VNT
Ventilation Fan Cushion Front Right
Y
X052-9 High-Side Drive
SEAT_FRONT_VENT_FAN_CUSHION
X052-16 High-Side Drive
SEAT_FRONT_VENT_FAN_CUSHION_SPEED
X625R-1 Power In
Power
X625R-2 PWM In
PWM
X625R-3 Ground
Ground
VNT
Ventilation Fan Backrest Front Right
Y
X052-10 High-Side Drive
SEAT_FRONT_VENT_FAN_BACKREST
X052-11 High-Side Drive
SEAT_FRONT_VENT_FAN_BACKREST_SPEED
X626R-1 Power In
Power
X626R-2 PWM In
PWM
X626R-3 Ground
Ground
STPS
Seat Track Position Sensor Front Right
Y
X052-32 Signal In
SEAT_FRONT_TRACK_POSITION_SENSOR
X052-33 Ground
SEAT_FRONT_TRACK_POSITION_SENSOR_GROUND
TWIST_SRI07_A-A
X624-2 Analog Out
Signal
X624-1 Ground
Return
LMBR
Lumbar Front Right
Y
X052-34 High-Side Drive
LUMBAR_ECU
X052-21 LIN
LUMBAR_ECU_LIN
X619R-1 Power In
ECU & Pump Power Input
X619R-6 LIN
ECU LIN
X619R-3 Pass-through
Passthrough Pump Power
X619R-4 Pass-through
Passthrough Pump Ground
X619R-2 Ground
ECU & Pump Chassis Ground
LMBR
Lumbar Front Right
Y
X620R-1 Power In
Pump Power
X620R-3 Ground
Pump Ground
Z1-SCR80
OCS
Occupant Classification System (OCS)
Y
X052-20 High-Side Drive
OCCUPANT_CLASSIFICATION_ECU
X052-18 LIN
OCCUPANT_CLASSIFICATION_ECU_LIN
X052-19 Ground
OCCUPANT_CLASSIFICATION_ECU_GROUND
X653-1 Power In
Power
X653-2 LIN
LIN
X653-3 Ground
GND
X052-3 Ground
SEAT_FRONT_SHARED_GROUND
TESLA
THE INFORMATION CONTAINED HEREIN IS DEEMED TO BE CONFIDENTIAL, PROPRIETARY, AND A TRADE SECRET OF TESLA MOTORS. T
NOT BE USED, REPRODUCED, OR DISCLOSED AS THE DIRECT OR INDIRECT BASIS FOR THE DEVELOPMENT, MANUFACTURE, OR SALE
PRODUCTS WITHOUT THE EXPRESSO WRITTEN CONSENT OF TESLA MOTORS.
PROGRAM
Model 3 SOP9
RELEASED
Oct 2025
NAME
Seats - 1R Right
SHEET
53 OF 57

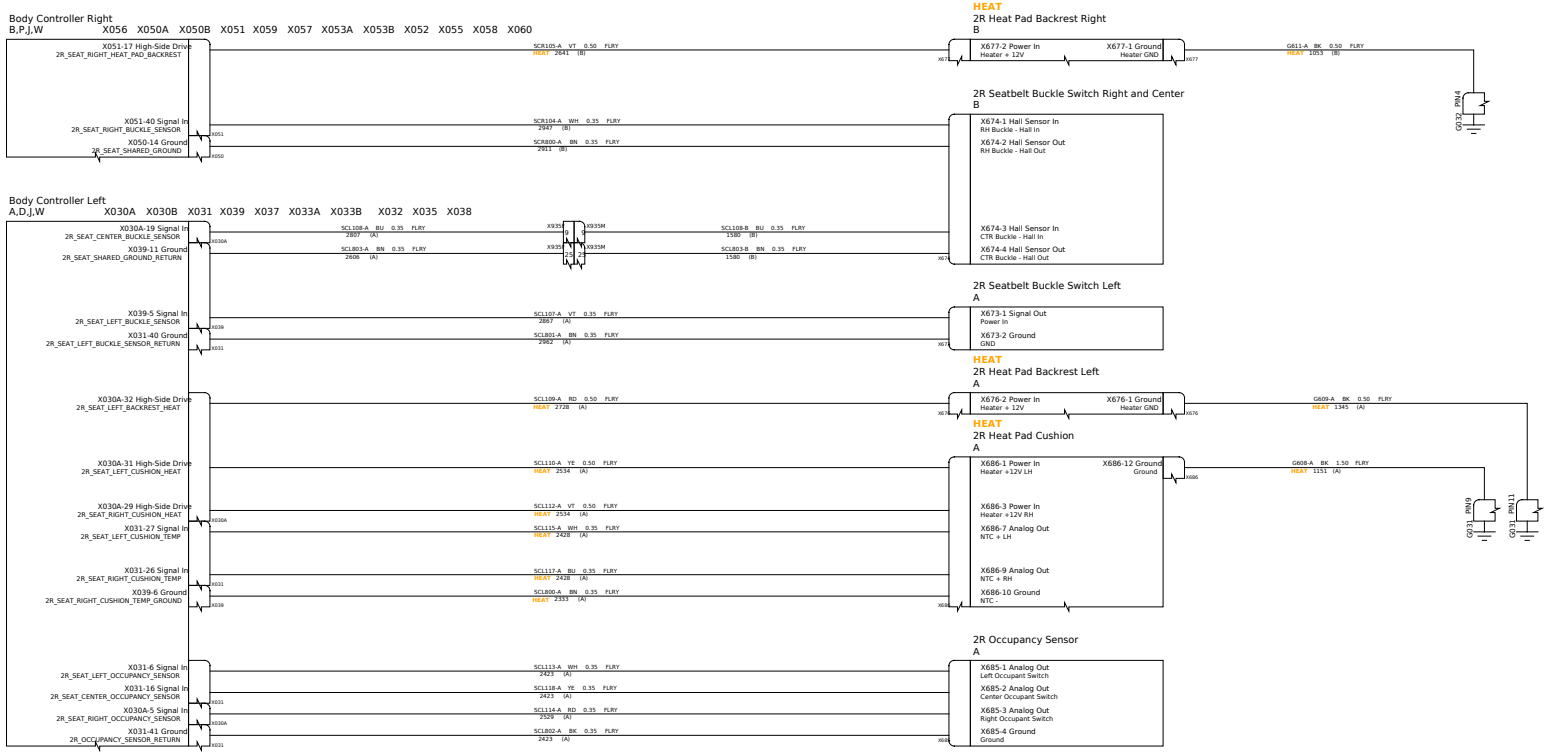

TESLA

THE INFORMATION CONTAINED HEREIN IS DEEMED TO BE CONFIDENTIAL, PROPRIETARY, AND A TRADE SECRET OF TESLA MOTORS. T
NOT BE USED, REPRODUCED, OR DISCLOSED AS THE DIRECT OR INDIRECT BASIS FOR THE DEVELOPMENT, MANUFACTURE, OR SALE
PRODUCTS WITHOUT THE EXPRESSO WRITTEN CONSENT OF TESLA MOTORS.

PROGRAM	RELEASED
Model 3 SOP9	Oct 2025
NAME	SHEET
Seats - 2R	54 OF 57

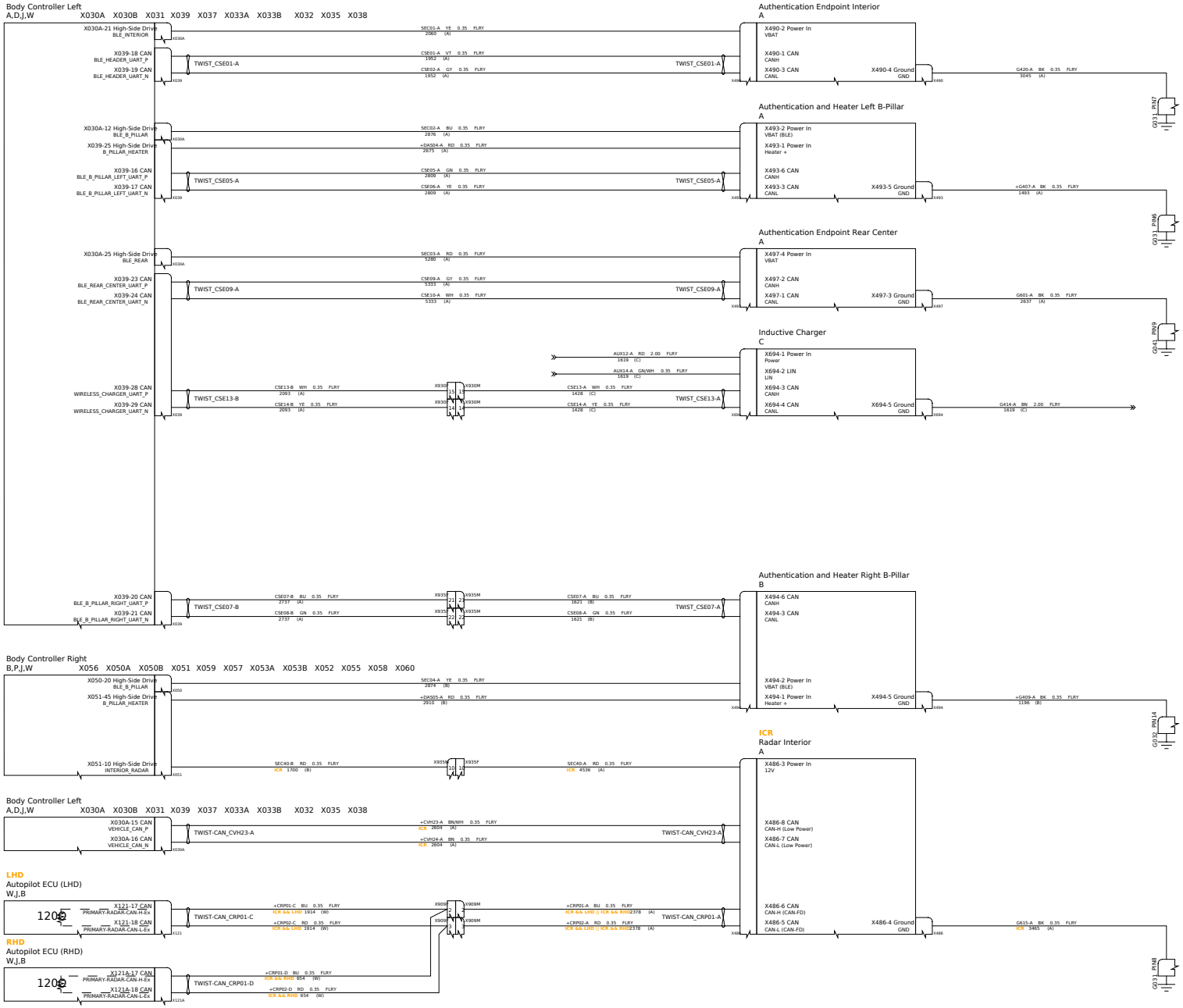

TESLA

THE INFORMATION CONTAINED HEREIN IS DEEMED TO BE CONFIDENTIAL, PROPRIETARY, AND A TRADE SECRET OF TESLA MOTORS. T
NOT BE USED, REPRODUCED, OR DISCLOSED AS THE DIRECT OR INDIRECT BASIS FOR THE DEVELOPMENT, MANUFACTURE, OR SALE
PRODUCTS WITHOUT THE EXPRESSO WRITTEN CONSENT OF TESLA MOTORS.

PROGRAM Model 3 SOP9	RELEASED Oct 2025
NAME Security Controls	SHEET 55 OF 57

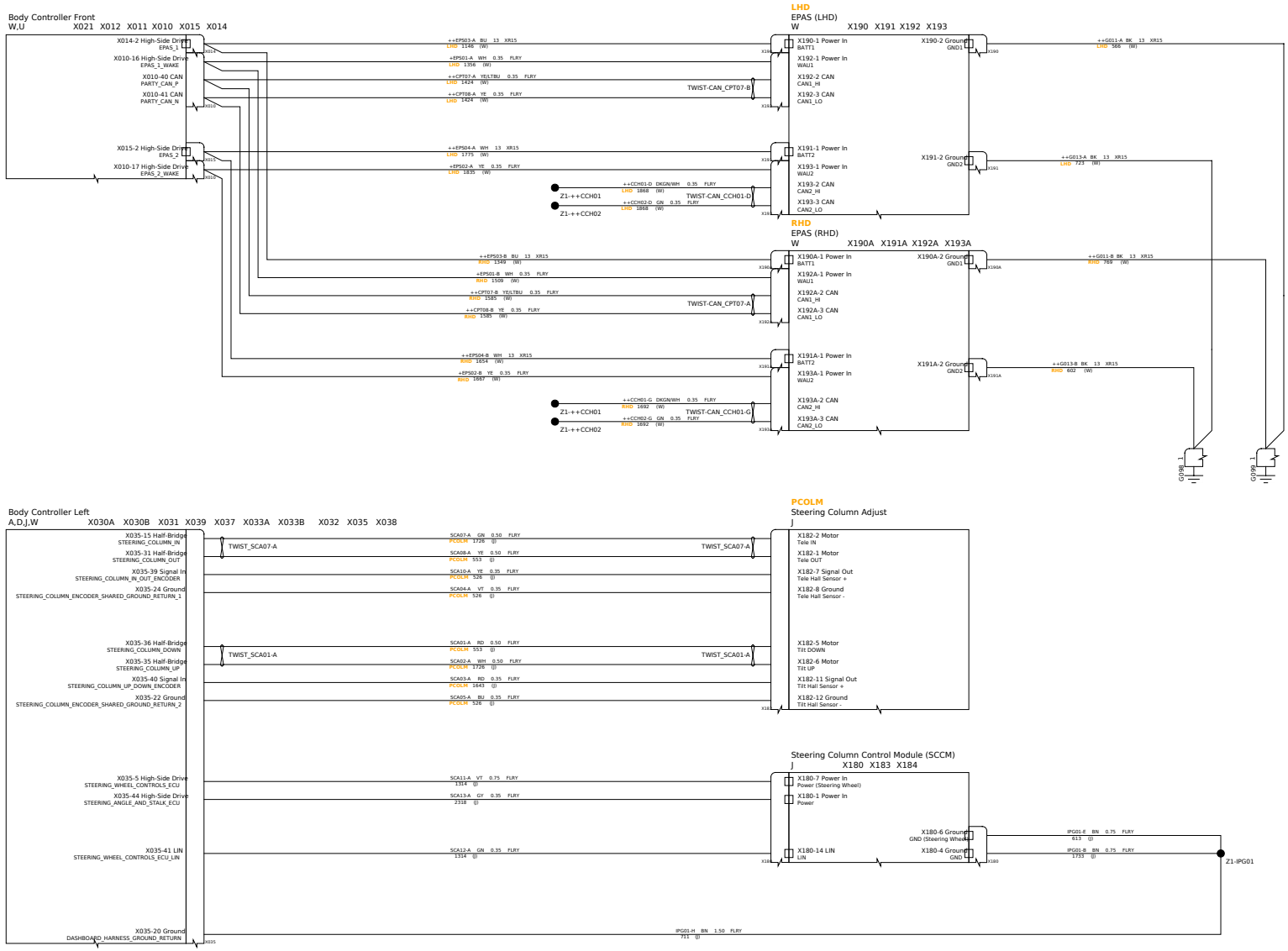

TESLA

THE INFORMATION CONTAINED HEREIN IS DEEMED TO BE CONFIDENTIAL, PROPRIETARY, AND A TRADE SECRET OF TESLA MOTORS. T
NOT BE USED, REPRODUCED, OR DISCLOSED AS THE DIRECT OR INDIRECT BASIS FOR THE DEVELOPMENT, MANUFACTURE, OR SALE
PRODUCTS WITHOUT THE EXPRESSO WRITTEN CONSENT OF TESLA MOTORS.

PROGRAM Model 3 SOP9	RELEASED Oct 2025
NAME Steering	SHEET 56 OF 57

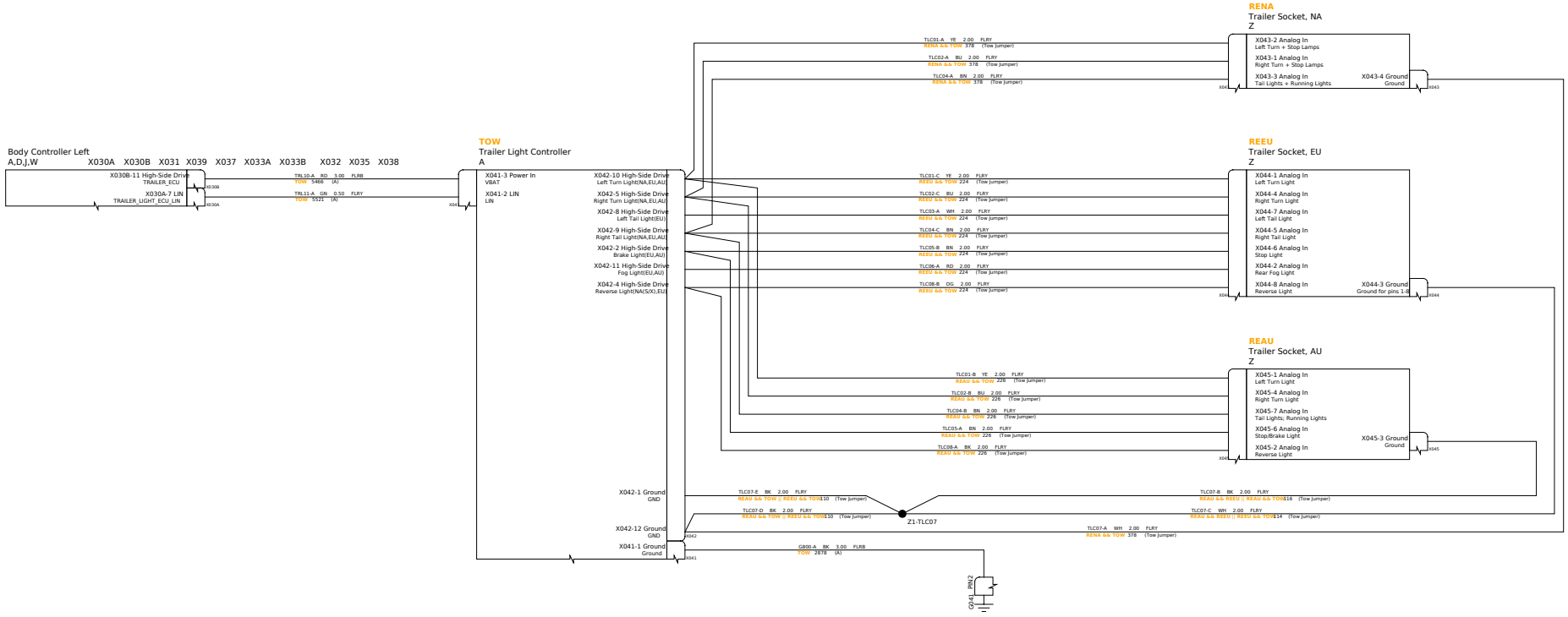

THE INFORMATION CONTAINED HEREIN IS DEEMED TO BE CONFIDENTIAL, PROPRIETARY, AND A TRADE SECRET OF TESLA MOTORS. T
NOT BE USED, REPRODUCED, OR DISCLOSED AS THE DIRECT OR INDIRECT BASIS FOR THE DEVELOPMENT, MANUFACTURE, OR SALE
PRODUCTS WITHOUT THE EXPRESSO WRITTEN CONSENT OF TESLA MOTORS.

PROGRAM	RELEASED
Model 3 SOP9	Oct 2025
NAME	SHEET
Towing Interface	57 OF 57