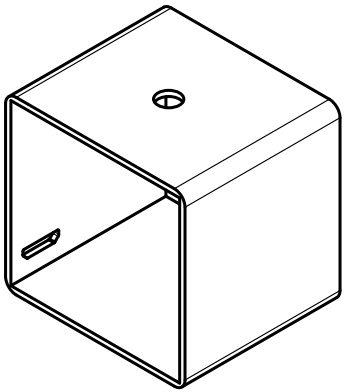

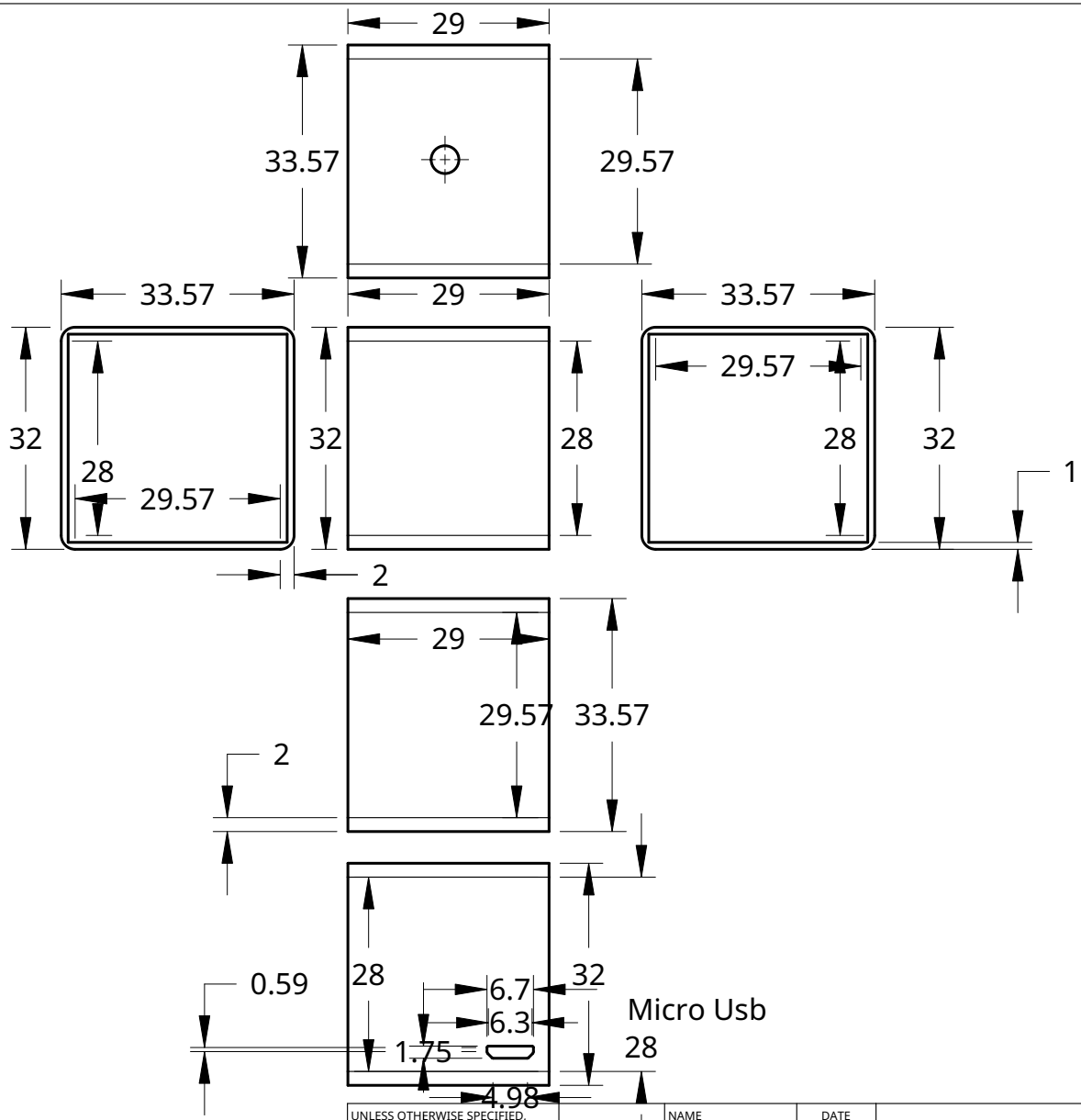

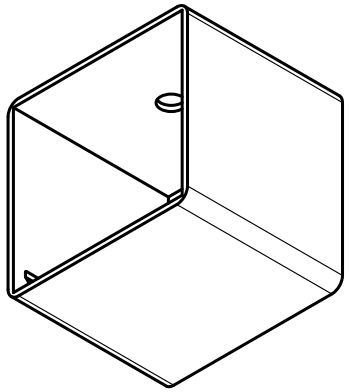

UNLESS OTHERWISE SPECIFIED, DIMENSIONS ARE IN MILLIMETERS		NAME	DATE
ANGULAR = ± °	DRAWN	RONIT DSILVA	01/12/2025
SURFACE FINISH	CHECKED		
	APPROVED		
DO NOT SCALE DRAWING			
BREAK ALL SHARP EDGES AND REMOVE BURRS			
THIRD ANGLE PROJECTION	MATERIAL: Aluminium Plastic	FINISH	

TITLE

Raspberry Pi Zero 2W Mini Case

SIZE	DWG NO.	REV.
A		1

SCALE	WEIGHT	SHEET
1:1		1 of 3

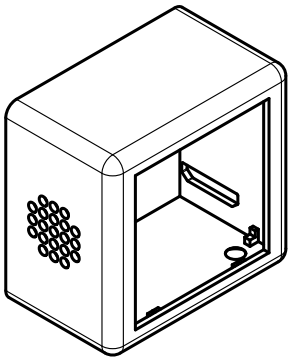

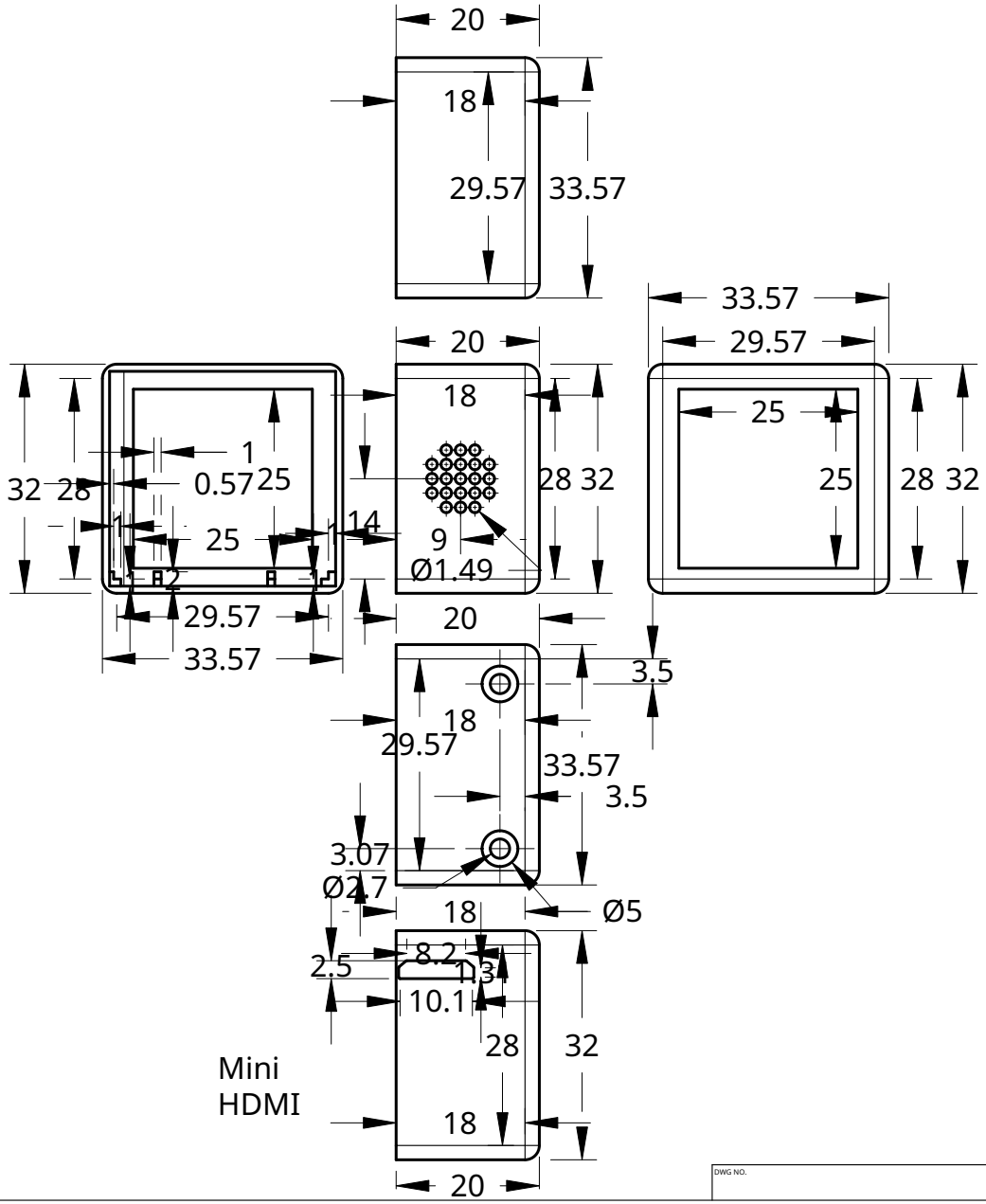

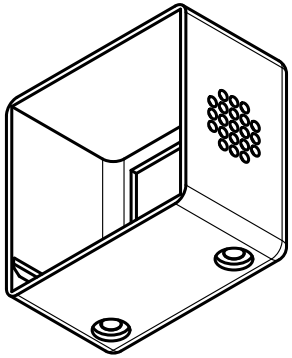

DWG NO.	SIZE	SCALE	SHEET	REV.
	A	1:1	2 of 3	1

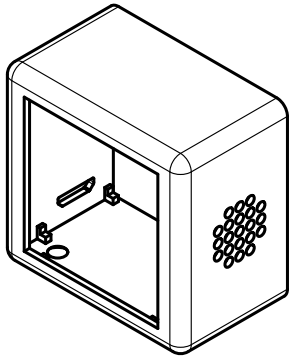

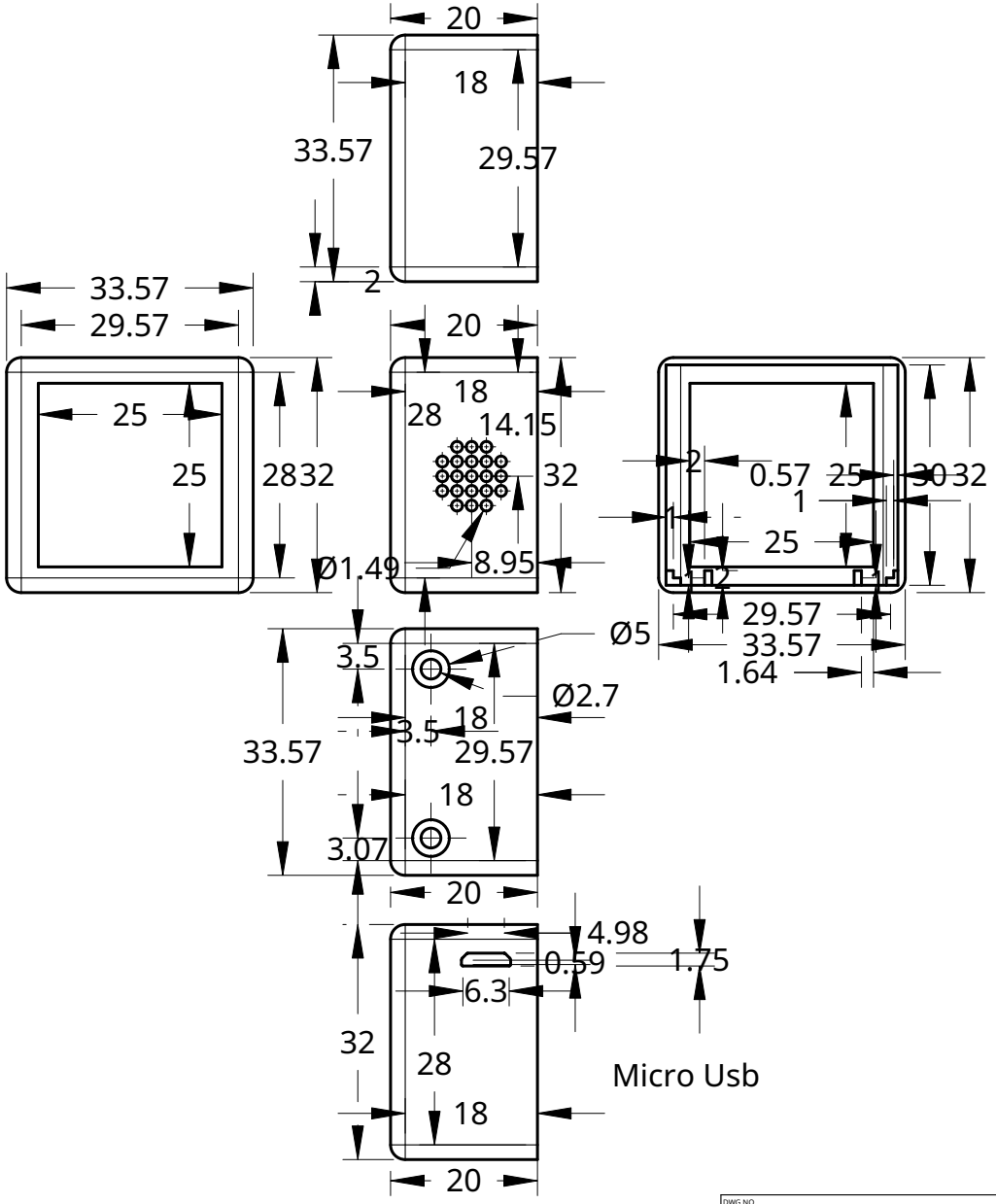

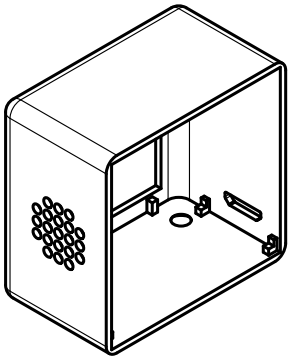

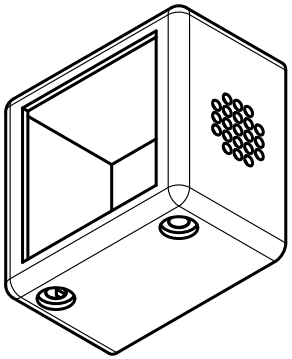

DWG NO.	SIZE	SCALE	SHEET	REV.
	A	1:1	3 of 3	1