WARWICK
THE UNIVERSITY OF WARWICK

High Performance Computing

Cluster Networking

Dr Ligang He

Communication Performance

- Communication has significant impact on application performance:
  - ❑ communication is the overhead in parallel computing
- An increase in compute power typically demands proportional increases in communication performance

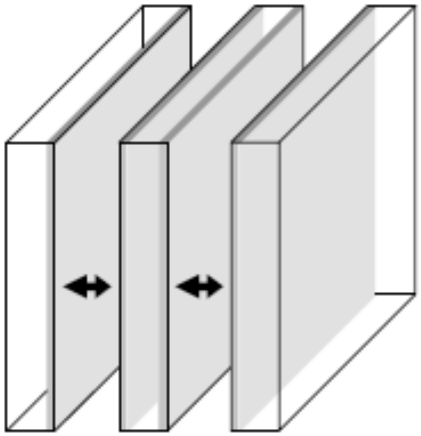

Improve communication performance from different perspectives

WARWICK
THE UNIVERSITY OF WARWICK

- Hardware
- Software
  - maintain data locality
  - overlap communication with computation
  - combine small messages to a large message
- Network topology
  - Interconnection networks have a vital role in cluster systems

Two general structures for LANs

WARWICK
THE UNIVERSITY OF WARWICK

- **Shared network (bus)**
  - All processors are connected to and share the bus… each processor listens to every message.
  - Collisions can occur: requires back-off policies and retransmissions.
  - Suitable when the communication load is low - inappropriate for high performance applications.
  - Very little reason to use this form of network today.

Two general structures for standard LANs

- Shared network (bus)
- Switched network
  - Permits point-to-point communications between sender & receiver.
  - Simultaneous internal transport provides high aggregate bandwidth.
  - Multiple messages are sent simultaneously.
  - We focus on switched network

BlueGene/L

No. 1 in Top 500 list from 2004 – 2007; Create a philosophy of interconnecting high density of low performance processors to construct a supercomputer

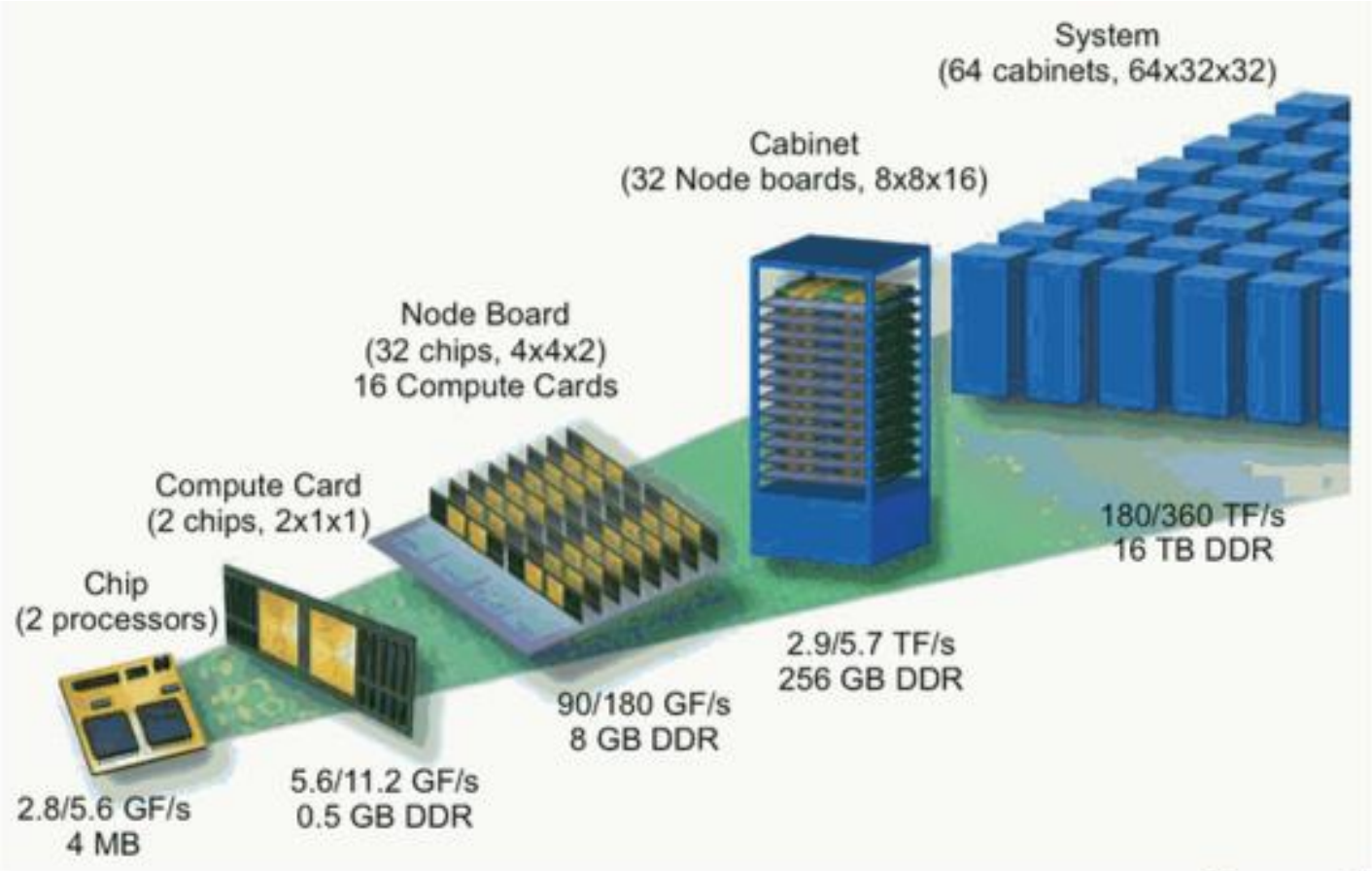

Source: IBM

BlueGene/L - networking

WARWICK
THE UNIVERSITY OF WARWICK

BlueGene system employs various network types.

Central is the torus interconnection network:

- **3D torus**
- **Each node connects to six neighbours (bidirectional).**
- **Each link with 1.4 Gbit/s.**
- **1.4 x 6 x 2= 16.8 Gbit/s aggregate bandwidth**

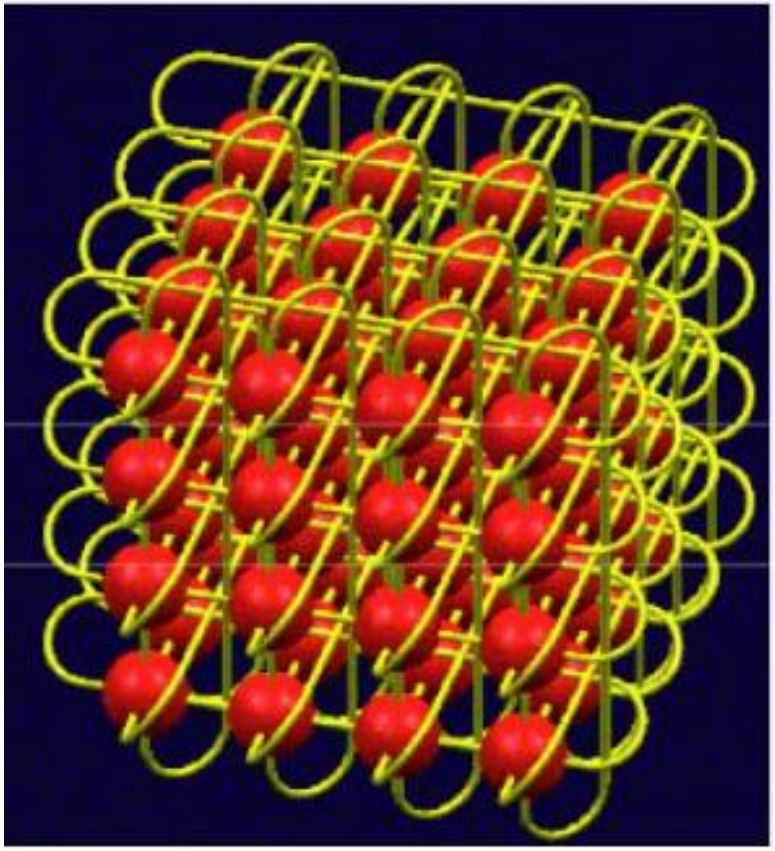

Fugaku

- Japan
- No. 7 in Top500
- 158,976 nodes
  - Each node (Fujitsu A64FX) has 48 cores and 32 GiB
- Uses a 6D torus topology
  - 12 nodes are interconnected to a 2x3x2 torus. These small toruses are further interconnected to a big 3D torus
- Another Japanese supercomputer – K computer also uses this topology
  - No. 1 in 2011

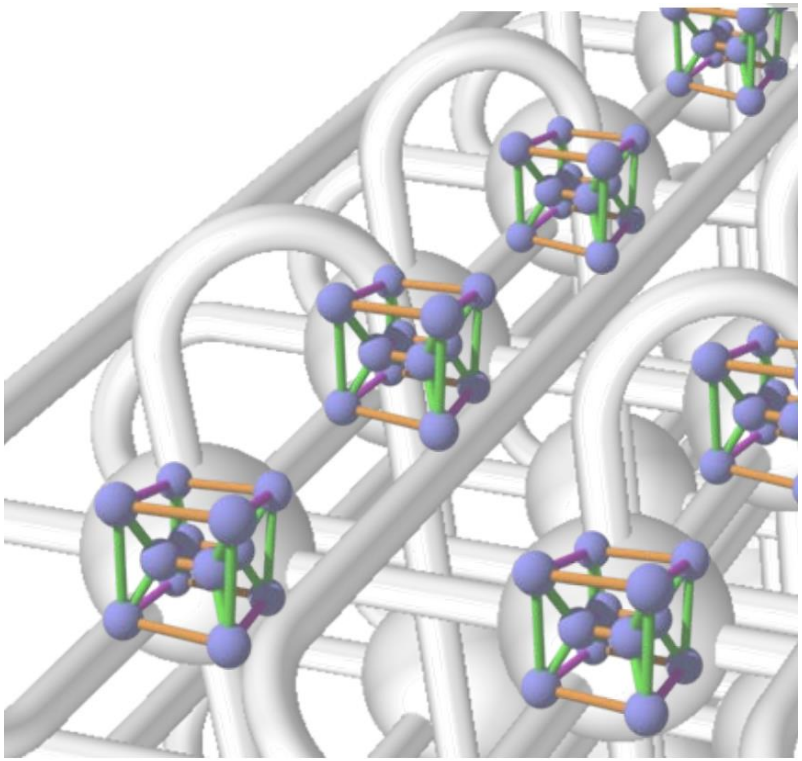

Submit

- ❑US
- ❑No. 9 in Top500 2024 June
- ❑4608 nodes
  - Each node has 2 CPUs (IBM Power9) and 6 GPUs (Nvidia V100)
  - Each node has 1600GB memory
- ❑Uses a fat tree topology

Pleiades

- US
- No. 3 in 2008
- 11,207 nodes
  - Each node has 2 Intel Xeon processors (each with 8-14 cores)
  - Each node has 2-5.3GB memory
- Uses 11D hypercube topology

Earth Simulator

- Japan
- No. 1 in Top500 from 2002-04
- 640 nodes
  - Each node has 8 vector processors and 16GB memory
- Use the crossbar topology

Metrics to evaluate network topology

WARWICK
THE UNIVERSITY OF WARWICK

- **Scalability: the number of switches needed to interconnect a given number of nodes**
  - ❑ **cost per node**
- **Degree: the number of links to / from a node**
  - ❑ **measure aggregate bandwidth**
- **Diameter: the shortest path between the furthest nodes.**
  - ❑ **measure latency**
- **Bisection width: the minimum number of links that must be cut in order to divide the topology into two independent networks of the same size (+/- one node).**
  - ❑ **measure bottleneck bandwidth - if higher, the network will perform better under heavy load.**

Graph 500 (revisit)

WARWICK
THE UNIVERSITY OF WARWICK

- Measure how fast a computer can traverse the edges of a graph
- Metrics: "gigateps"
  - Means “billions of traversed edges per second”
  - A node in the graph represents a data point
  - An edge is a connection between two data points.
  - Represent how fast a computer system accesses its global memory
  - Use the breadth-first search as the benchmark
- Using gigateps, supercomputers have been slowing down
  - “Over the past 15 years, each 1,000-fold increase in flops has resulted in a 10-fold decrease in accessible memory. ” - Prof. Peter Kogge, Notre Dame University
- http://www.graph500.org/

Crossbar

- Low resource contention
- Switch scalability is poor - $O(N^2)$
- Lots of wiring, cost is high

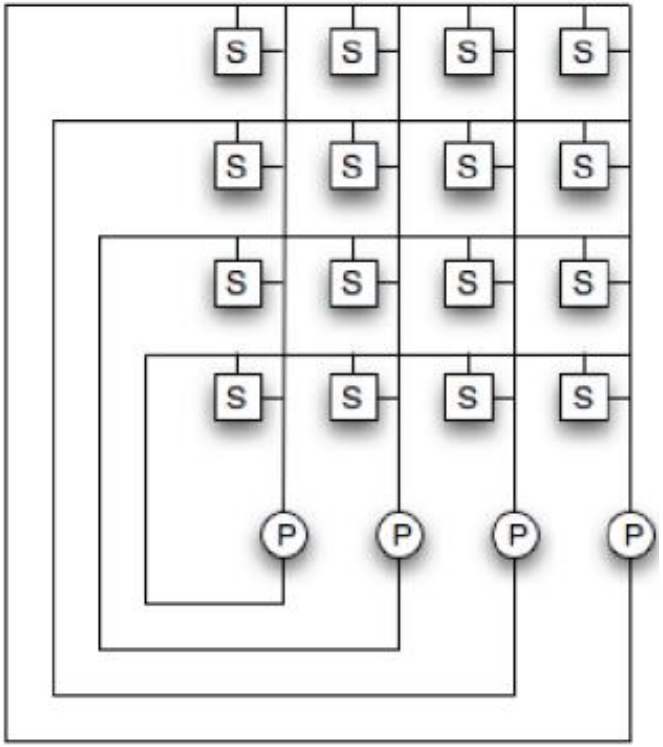

Earth Simulator

- No. 1 in Top500 from 2002-04
- 640 nodes
  - Each node has 8 vector processors and 16GB memory
- Use the crossbar topology

Linear Array and Ring

- We need networks with scaling better than $O(N^2)$.
- We can interconnect the nodes into a linear array.
- Switch scalability: O(N)
- Wrap around the end nodes to make a 1D torus (ring)
- Diameter for linear array: O(N) - latency is high

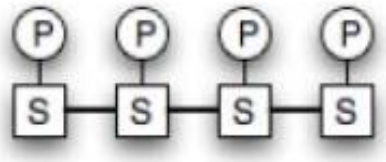

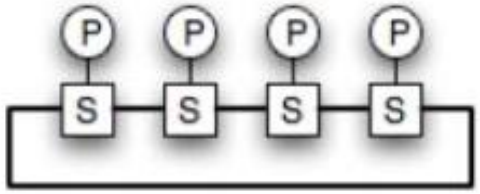

Linear Arrays and Rings

- Diameter for 1D array: O(N);
- Bisection width for 1D linear array: O(1);
- Diameter for 1D torus: ; Bisection width for 1D torus:

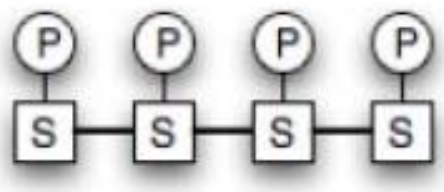

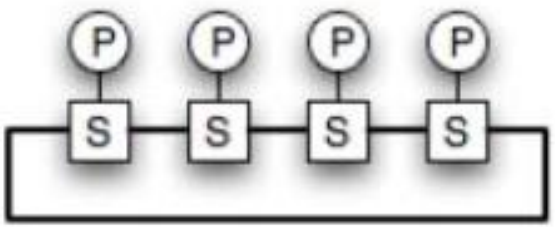

Linear Arrays and Rings

- Diameter for 1D array: O(N);
- Bisection width for 1D linear array: O(1);
- Diameter for 1D torus: O(N/2); Bisection width for 1D torus: O(2)

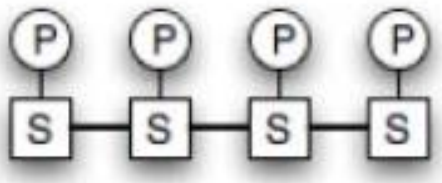

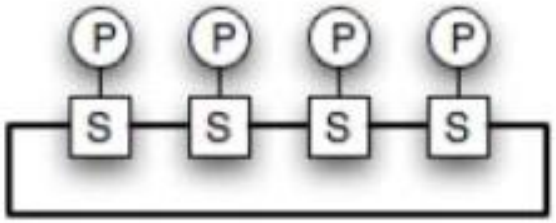

2D Mesh and Torus

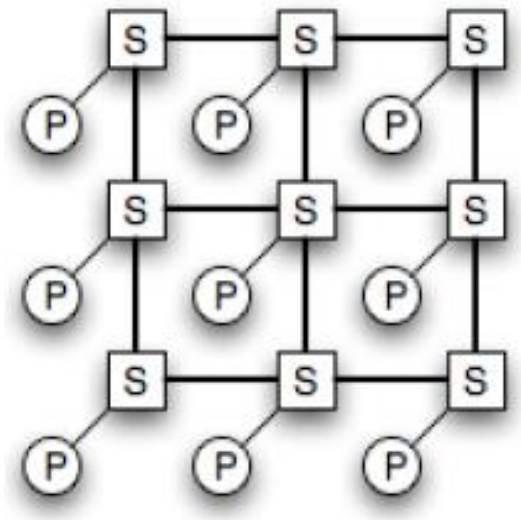

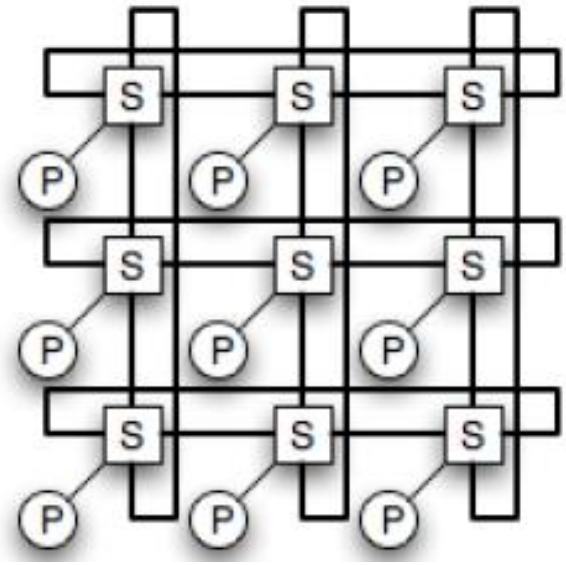

- Switch scaling:
- Average degree:
- Diameter for 2D mesh:

2D Mesh and Torus

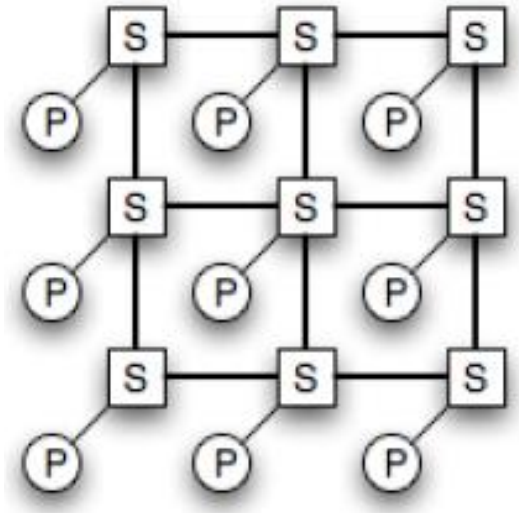

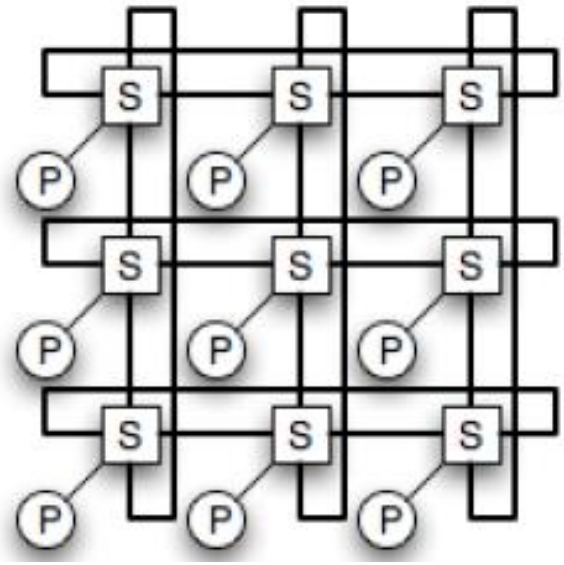

- Switch scaling: O(N)
- Average degree: 4
- Diameter for 2D mesh: $O(2N^{1/2})$

Bisection width for 2D mesh (N is an even number)

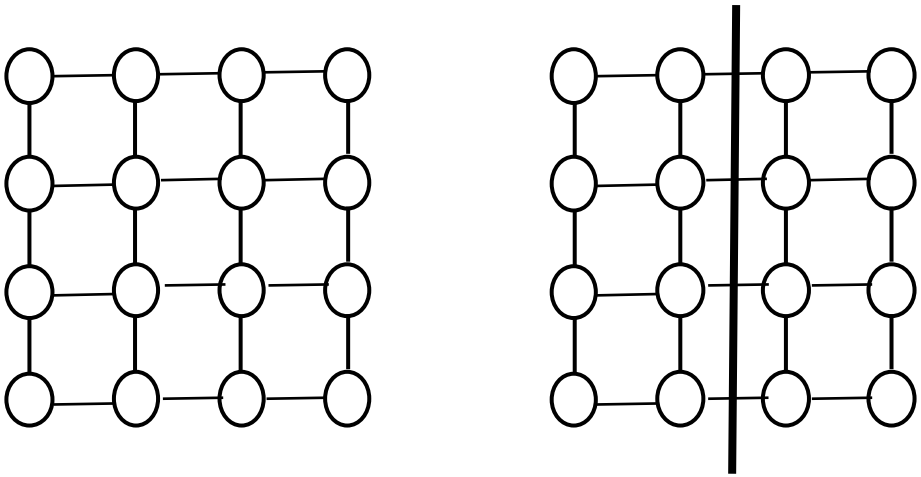

Bisection width for 2D mesh: $O(N^{1/2})$

Bisection width for 2D mesh (n is an odd number)

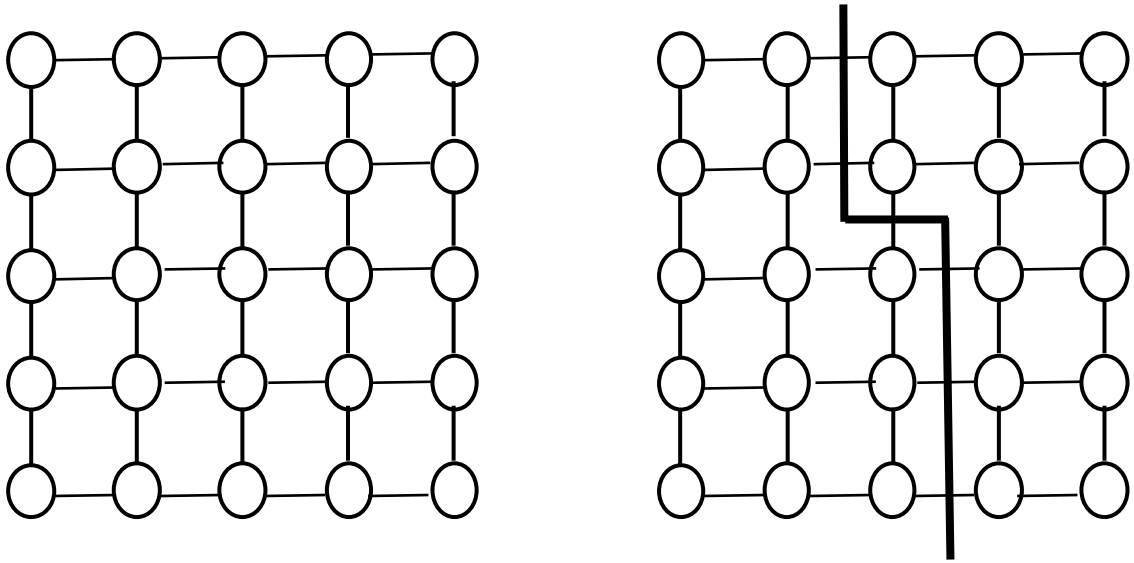

Bisection width for 2D mesh: $O(n^{1/2}+1)=O(n^{1/2})$

2D Mesh and Torus

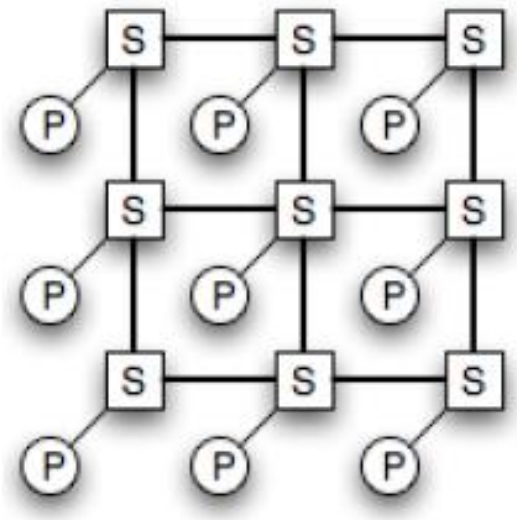

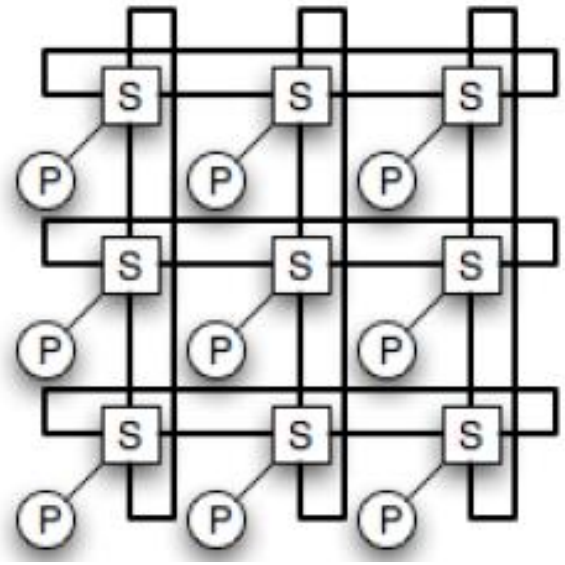

- Switch scaling: O(N)
- Average degree: 4
- Diameter for 2D mesh: $O(2N^{1/2})$
- Bisection width for 2D mesh: $O(N^{1/2})$
- Diameter for 2D torus:
- Bisection width for 2D torus:

2D Mesh and Torus

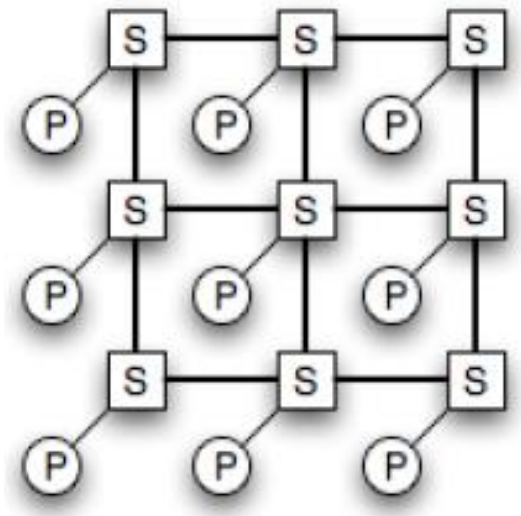

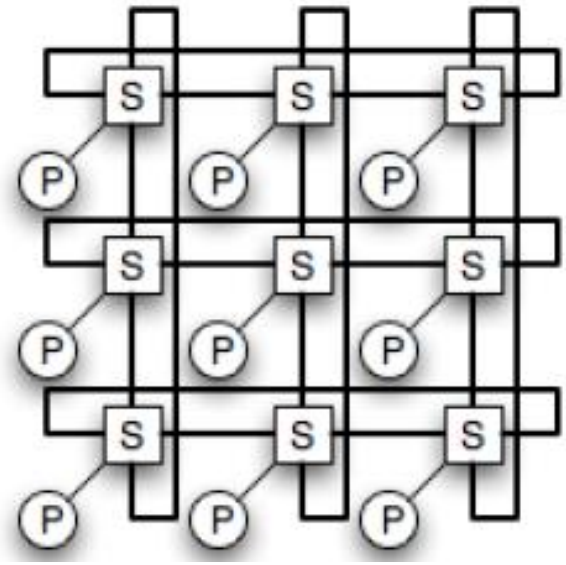

- Switch scaling: O(N)
- Average degree: 4
- Diameter for 2D mesh: $O(2N^{1/2})$
- Bisection width for 2D mesh: $O(N^{1/2})$
- Diameter for 2D torus: $O(N^{1/2})$
- Bisection width for 2D torus: $O(2N^{1/2})$

BlueGene/L Networking

- BlueGene/L was No. 1 from 2004 – 2007
- Uses the 3D torus topology

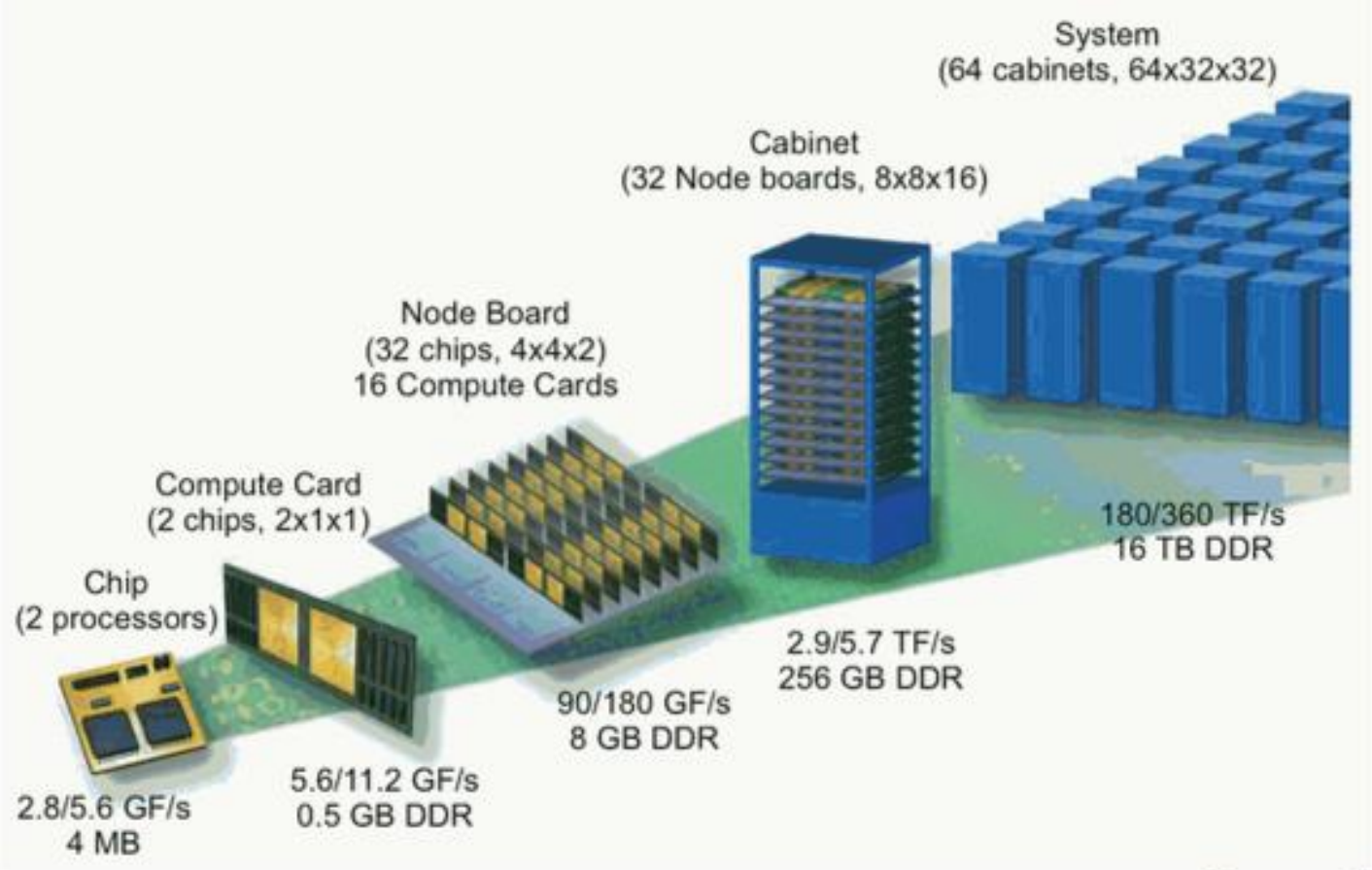

Source: IBM

BlueGene/L - networking

WARWICK
THE UNIVERSITY OF WARWICK

BlueGene system employs various network types.

Central is the torus interconnection network:

- **3D torus**

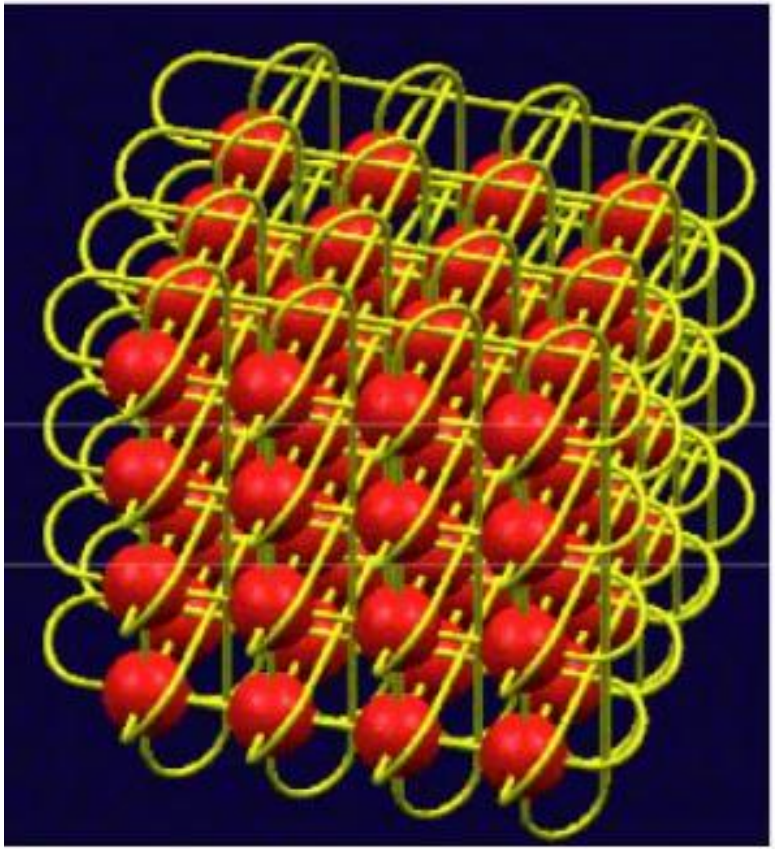

Fugaku

- No. 4 in Top500
- 158,976 nodes
  - Each node (Fujitsu A64FX) has 48 cores and 32 GiB
- Uses a 6D torus topology
  - 12 nodes are interconnected to a 2x3x2 torus. These small toruses are further interconnected to a big 3D torus of the size 24x23x24
- Another Japanese supercomputer – K computer also uses this topology
  - No. 1 in 2011

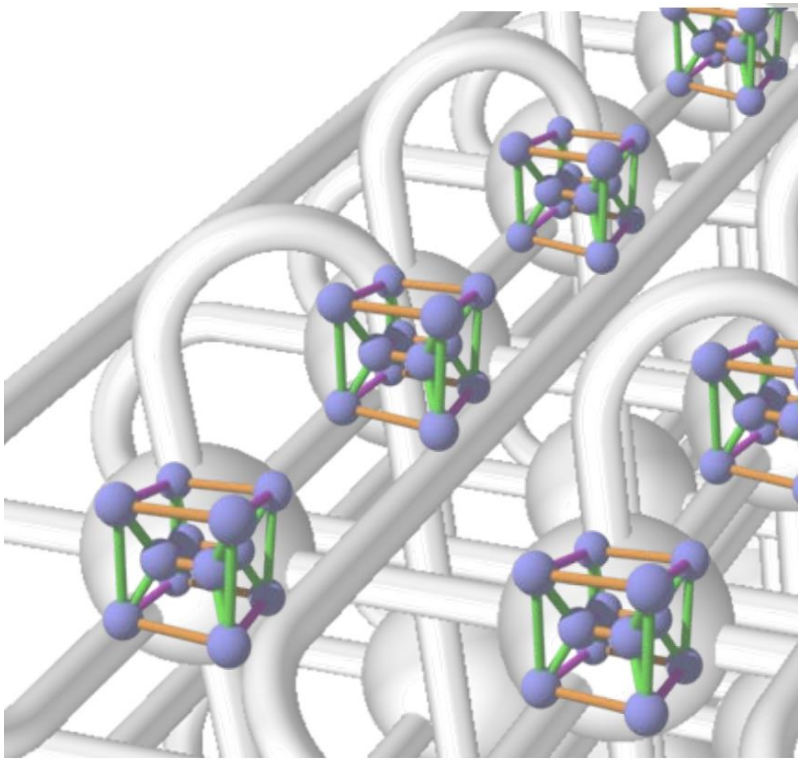

Hypercube

- Construct hypercube: **iterative graph expansion**
- K dimension, Switches $N = 2^K$.
- Diameter: O(K).
- Good bisectional width $O(2^{K-1})$ or O(N/2).

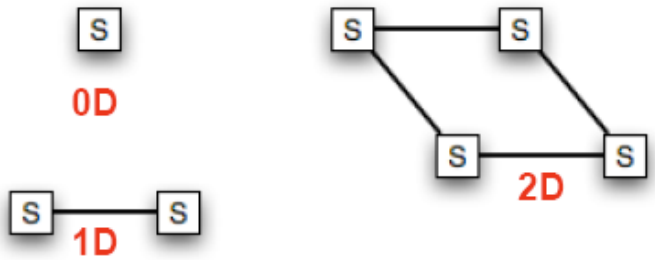

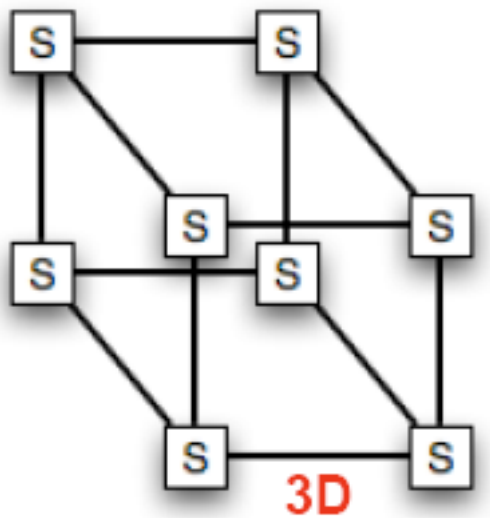

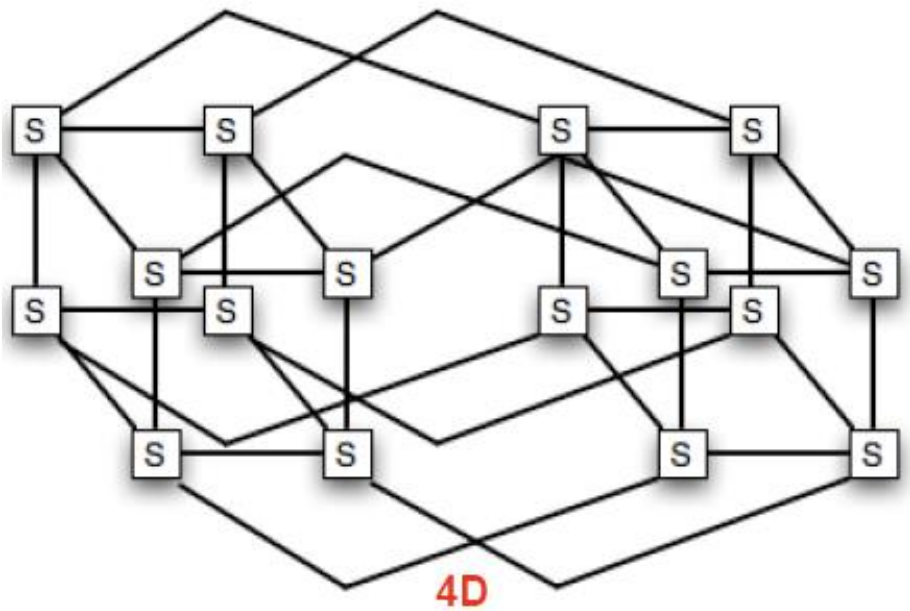

Pleiades

- By US
- No. 3 in 2008
- 11,207 nodes
  - Each node has 2 Intel Xeon processors (each with 8-14 cores)
  - Each node has 2-5.3GB memory
- Uses a 11D hypercube topology

Binary Tree

- Scaling:
  - $n = 2^d$ processor nodes (where d = depth)
  - 2^{d+1}-1 (i.e., 2n-1) switches
- Degree: 3
- Diameter: O(2d)
- Bisection width: O(1)

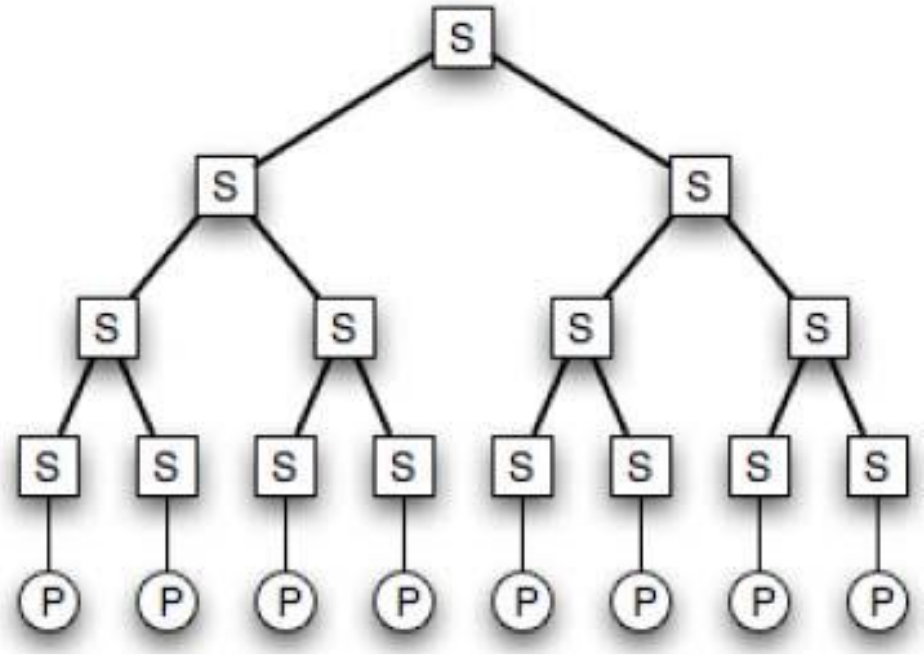

Fat tree

- Branches nearer the top of the tree are "fatter" than branches further down the tree
- Add the links such that the number of down links of a switch is the same as the number of uplinks of the switch
- Same diameter to a binary tree.
- Bisection width is 2^{d-1}
- Degree:

leaf nodes: 1
root nodes: 2^d
Internal nodes 2^{k+1}
k is the level from bottom

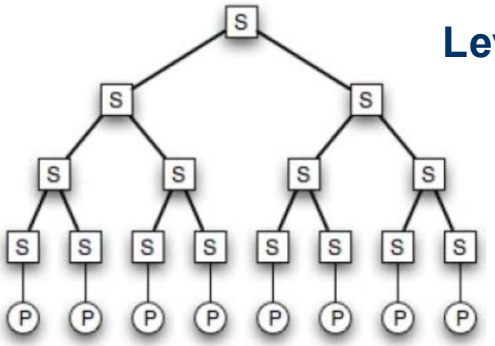

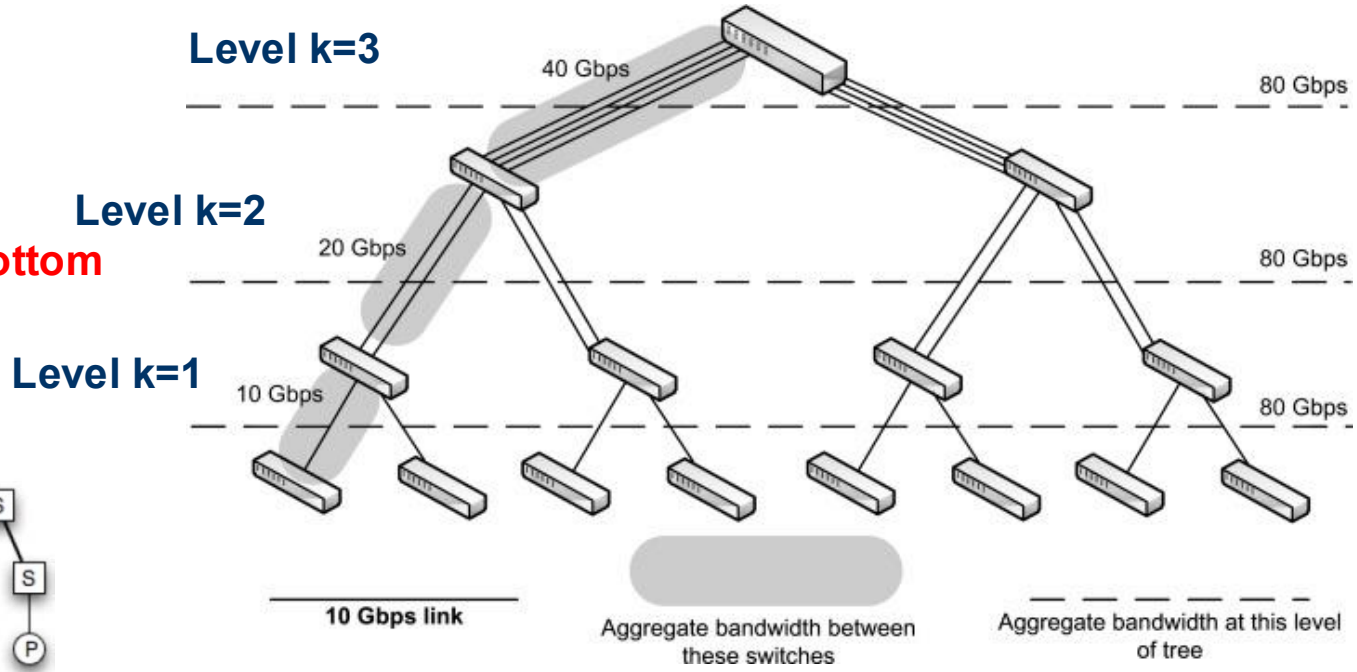

Question:

WARWICK
THE UNIVERSITY OF WARWICK

A binary fat tree is used to interconnect 4096 nodes

- **What is the depth of the tree?**
- **What is the bisection width?**
- **What is the degree of the root switch?**

Submit

- No. 7 in Top500
- 4608 nodes
  - Each node has 2 CPUs (IBM Power9) and 6 GPUs (Nvidia V100)
  - Each node has 1600GB memory
- Uses a fat tree topology

Summary of Interconnection Topologies

Topology	Degree	Diameter	Bisection
1D Array	2	N-1	1
1D Ring	2	N/2	2
2D Mesh	4	$2N^{1/2}$	$N^{1/2}$
2D Torus	4	$N^{1/2}$	$2N^{1/2}$
Hypercube	$n=\log_2(N)$	N	N/2
Binary tree	3	2d	1
Fat tree	2^{k+1}	2d	2^{d-1}