UNIVERSITY OF WARWICK

Paper Details

Paper Code: CS4020_B

Paper Title: High Performance Computing

Exam Period: Summer 2023

Exam Rubric

Time Allowed: 2 hours

Exam Type: Standard Examination

Approved Calculators: Permitted

Additional Stationery

Instructions

Choose to answer TWO questions from Questions 1, 2 and 3.

Question 4 is **compulsory**.

Read carefully the instructions on the answer book and make sure that the particulars required are entered on each answer book.

Read carefully the instructions on the answer booklet and make sure that the particulars required are entered on each answer booklet.

The exam question paper **MUST NOT** be removed from the examination venue.

Permitted calculators: CASIO FX82, FX83 and FX85 series

WARWICK
THE UNIVERSITY OF WARWICK

1. *This question is about the fundamental knowledge.*

(a) There are multiple different levels to achieve parallelism in a supercomputer. Discuss the 4 key ways in which parallelism can be achieved in a supercomputer, and their benefits and issues. [12]

(b) Race conditions and deadlocks can occur in any program with parallelism. What are race conditions and deadlocks, provide a pseudocode code example and explain how can they be avoided? [6]

(c) Control dependencies can impact the performance of some parallelisation techniques. What is a control dependency? Give a pseudocode example and describe how it can be solved. [5]

(d) The Top500 is a ranked list of the top supercomputers in the world. To rank these, a benchmark suite called LINPACK is utilised to determine the amount of Floating Point Operations (FLOP) can be calculated per second.

(i) What is a benchmark suite and why is it useful for the benchmark suite to be varied? [4]

(ii) What are the advantages and disadvantages of using a benchmark suite over a mini-application suite? [8]

continued

continued

2. *This question is about parallel programming models*

(a) OpenMP is useful to perform compile-time optimisation.

(i) Describe the model OpenMP utilises. How does this differ from the model used for PThreads or Java Runnables? [4]

(ii) How do the different schedule options help OpenMP run more efficiently? [4]

(b) Message Passing Interface (MPI) sends data from one process (referred to as a rank) to another.

(i) Why is it important that MPI is an interface? [2]

(ii) Give an example on an interface specific detail and an example on what is implementation specific with regards to an `MPI_Send` instruction. [4]

(c) Both OpenMP and MPI have a reduction operation.

(i) What is a reduction operation? [3]

(ii) Describe what is achieved by **Listing 1**. [2]

(iii) Discuss, using illustrative examples if necessary, what the function in **Listing 2** does, and how the different ranks interpret the parameter in this function. [6]

(iv) What is the key differences between an OpenMP reduction and an MPI reduction [4]

Listing 1: Code example for Question 2cii

```
int validationCheck(int N, float * a) {
    int result = 1;
    #pragma omp parallel for reduction(&:result)
    for (i = 0; i < N; i++) {
        result &= (a[i] > 0.5)
    }
}
```

Listing 2: Code example for Question 2ciii

```
int MPI_Reduce(const void *sbuf, void *rbuf, int count,
    MPI_Datatype datatype, MPI_Op op, int root, MPI_Comm comm);
```

(d) MPI allows for custom data types, which allows for data which is not contiguous to be sent within a single message. One example of a custom datatype is `MPI_Type_create_indexed_block`, which takes a count, the size of the block length, an array of offsets, the old datatype and a pointer to the new datatype. What is the memory layout of `newType` in the code shown in **Listing 3**? Assume a float takes 32 bits. [6]

Listing 3: Code example for Question 2d

```
int MPI_Type_create_indexed_block(5, 2, {2, 12, 6, 16, 17},
    MPI_FLOAT, &newType);
```

3. *This question is about high-performance computing systems.*

(a) Describe the typical architecture of a cluster system, including its functional components and their roles. Explain how scalability can be achieved in a high-performance cluster system. [10]

(b) How can parity information be utilized to achieve fault tolerance in disks? [5]

(c) Explain the architectural differences between CPUs and GPUs, with a focus on their design objectives, key functional components, and the roles these components play in their respective architectures. [10]

(d) The figure below shows two types of network topologies:

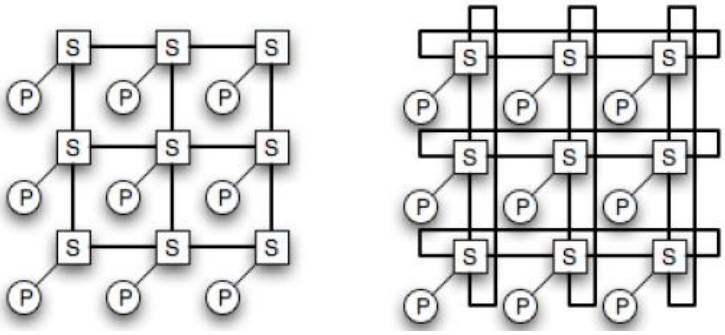

Figure 1. The topologies of two networks for Question 3(d)

i) What are the names of these two topologies? [2]

ii) Regarding the number of switches, n, in the network, what are the diameters and bisection widths of each topology? [4]

iii) Discuss which topology is superior based on their respective diameters and bisection widths. [4]

4. *This question is about performance modelling*.

(a) Assuming a linear topology, as shown in Figure 2, where switches (the squares labeled "S") use the store-and-forward switching technique to forward messages between processors (the circles labeled "P"), use the following parameters to construct a performance model for the communication time required to send a message between two processors in the linear topology.

- L: message size in bytes
- T_s: the time required to set up a communication at the sender processor
- T_h: the time of examining the head of a message in a switch or in the receiver processor
- T_w: the time of transferring a message of one byte on a network link
- D: the number of network links from the sender processor to the receive processor

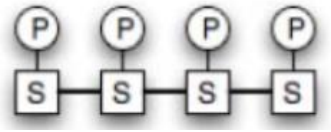

Figure 2. A linear topology for Question 4(a) [10]

(b) A program performs computations at each point in a two-dimensional grid using the 5-point stencil shown in Figure 3. The size of dimension X of the grid is N and the size of dimension Y is $4N$ (note that Figure 3 depicts only a portion of the grid), P processors are used to perform computations in parallel, assuming that N can be evenly divided by P.

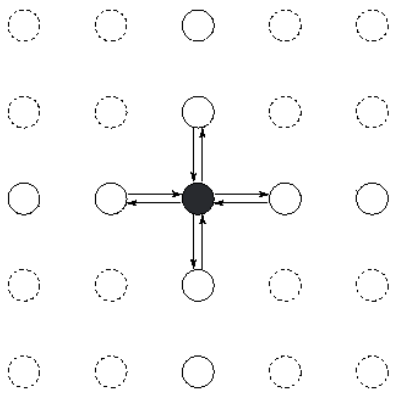

Figure 3. The communication pattern for Question 4(b)

Answer the following questions:

i) How can you construct a performance model for the program's execution time when the grid is partitioned using 1-D decomposition? Which dimension should you use to partition the grid of points, and why? Clearly define all parameters used in the constructed performance models. [5]

ii) If the grid of points is partitioned into P parts using 2-D decomposition, what is the optimal 2-D decomposition strategy in theory? Explain how you arrived at this conclusion and construct a performance model using this best 2-D decomposition strategy. Clearly define all parameters used in the constructed performance models. [8]

iii) Using the constructed performance models, compute the parallel efficiency and iso-efficiency function for both 1-D and 2-D decomposition. Which decomposition method is preferable, and why? [7]

end