पेटेंट कार्यालय
का
शासकीय जर्नल

OFFICIAL JOURNAL
OF
THE PATENT OFFICE

निर्गमन सं. **27/2013**	शुक्रवार	दिनांक: 05/07/2013
ISSUE NO. 27/2013	**FRIDAY**	**DATE:** 05/07/2013

पेटेंट कार्यालय का एक प्रकाशन
PUBLICATION OF THE PATENT OFFICE

INTRODUCTION

In view of the recent amendment made in the Patents Act, 1970 by the Patents (Amendment) Act, 2005 effective from 01st January 2005, the Official Journal of The Patent Office is required to be published under the Statute. This Journal is being published on weekly basis on every Friday covering the various proceedings on Patents as required according to the provision of Section 145 of the Patents Act 1970. All the enquiries on this Official Journal and other information as required by the public should be addressed to the Controller General of Patents, Designs & Trade Marks. Suggestions and comments are requested from all quarters so that the content can be enriched.

(**Chaitanya Prasad**)
CONTROLLER GENERAL OF PATENTS, DESIGNS & TRADE MARKS

5th JULY, 2013

CONTENTS

SUBJECT		*PAGE NUMBER*
JURISDICTION	**:**	**17826 – 17827**
SPECIAL NOTICE	**:**	**17828 – 17829**
EARLY PUBLICATION (DELHI)	**:**	**17830 – 17832**
EARLY PUBLICATION (MUMBAI)	**:**	**17833 – 17848**
EARLY PUBLICATION (CHENNAI)	**:**	**17849**
PUBLICATION AFTER 18 MONTHS (DELHI)	**:**	**17850 – 17881**
PUBLICATION AFTER 18 MONTHS (MUMBAI)	**:**	**17882 – 17932**
PUBLICATION AFTER 18 MONTHS (CHENNAI)	**:**	**17933 – 18130**
PUBLICATION AFTER 18 MONTHS (KOLKATA)	**:**	**18131 – 18580**
PUBLICATION UNDER SECTION 43(2) IN RESPECT OF THE GRANT (DELHI)	**:**	**18581 – 18582**
PUBLICATION UNDER SECTION 43(2) IN RESPECT OF THE GRANT (MUMBAI)	**:**	**18583 – 18584**
PUBLICATION UNDER SECTION 43(2) IN RESPECT OF THE GRANT (CHENNAI)	**:**	**18585 – 18586**
PUBLICATION UNDER SECTION 43(2) IN RESPECT OF THE GRANT (KOLKATA)	**:**	**18587 – 18588**
INTRODUCTION TO DESIGN PUBLICATION	**:**	**18589**
DESIGN CORRIGENDUM	**:**	**18590**
COPYRIGHT PUBLICATION	**:**	**18591**
CANCELLATION PROCEEDINGS UNDER SECTION 19 OF THE DESIGNS ACT, 2000	**:**	**18592**
THE DESIGNS ACT 2000 SECTION 30 DESIGN ASSIGNMENT	**:**	**18593**
REGISTRATION OF DESIGNS	**:**	**18594 - 18660**

THE PATENT OFFICE
KOLKATA, 05/07/2013
Address of the Patent Offices/Jurisdictions

The following are addresses of all the Patent Offices located at different places having their Territorial Jurisdiction on a Zonal basis as shown below:-

1	Office of the Controller General of Patents, Designs & Trade Marks, Boudhik Sampada Bhavan, Near Antop Hill Post Office,S.M.Road,Antop Hill, Mumbai – 400 037 Phone: (91)(22) 24123311, Fax : (91)(22) 24123322 E-mail: cgpdtm@nic.in	4	The Patent Office, Government of India, Intellectual Property Rights Building, G.S.T. Road, Guindy, Chennai – 600 032. Phone: (91)(44) 2250 2081-84 Fax : (91)(44) 2250 2066 E-mail: chennai-patent@nic.in ❖ The States of Andhra Pradesh, Karnataka, Kerala, Tamil Nadu and the Union Territories of Puducherry and Lakshadweep.
2	The Patent Office, Government of India, Boudhik Sampada Bhavan, Near Antop Hill Post Office,S.M.Road,Antop Hill, Mumbai – 400 037 Phone: (91)(22) 24137701 Fax: (91)(22) 24130387 E-mail: mumbai-patent@nic.in ❖ The States of Gujarat, Maharashtra, Madhya Pradesh, Goa and Chhattisgarh and the Union Territories of Daman and Diu & Dadra and Nagar Haveli	5	The Patent Office (Head Office), Government of India, Boudhik Sampada Bhavan, CP-2, Sector –V, Salt Lake City, Kolkata- 700 091 Phone: (91)(33) 2367 1943/44/45/46/87 Fax: (91)(33) 2367 1988 E-Mail: kolkata-patent@nic.in ❖ Rest of India
3	The Patent Office, Government of India, Boudhik Sampada Bhavan, Plot No. 32., Sector-14, Dwarka, New Delhi – 110075 Phone: (91)(11) 2808 1921 – 25 Fax: (91)(11) 2808 1920 & 2808 1940 E.mail: delhi-patent@nic.in ❖ The States of Haryana, Himachal Pradesh, Jammu and Kashmir, Punjab, Rajasthan, Uttar Pradesh, Uttaranchal, Delhi and the Union Territory of Chandigarh.		

Website: www.ipindia.nic.in
www.patentoffice.nic.in

All applications, notices, statements or other documents or any fees required by the Patents Act, 1970 and The Patents (Amendment) Act, 2005 or by the Patents (Amendment) Rules, 2006 will be received only at the appropriate offices of the Patent Office.

Fees: The Fees may either be paid in cash or may be sent by Bank Draft or Cheques payable to the Controller of Patents drawn on a scheduled Bank at the place where the appropriate office is situated.

पेटेंट कार्यालय
कोलकाता, दिनांक 05/07/2013
कार्यालयों के क्षेत्राधिकार के पते

विभिन्न जगहों पर स्थित पेटेन्ट कार्यालय के पते आंचलिक आधार पर दर्शित उनके प्रादेशिक अधिकार क्षेत्र के साथ नीचे दिए गए हैं :-

1	कार्यालय: महानियंत्रक, एकस्व, अभिकल्प तथा व्यापार चिह्न, एनटॉप हिल डाकघर के समीप, एस. एम. रोड, एनटॉप हिल, मुम्बई -400 037, भारत. फोन: (91)(22) 24123311 फैक्स: (91)(22) 24123322 ई.मेल: cgpdtm@nic.in	4	पेटेंट कार्यालय चेन्नई, इंटेलेक्चुअल प्रोपर्टी राइट्स बिल्डिंग इंडस्ट्रियल इस्टेट एसआईडीसीओ आरएमडी गोडाउन एरिया एडजसेन्ट टु ईगल फ्लास्क जी.एस.टी. रोड, गायन्डी, चेन्नई - 600 032. फोन: (91)(44) 2250 2081-84 फैक्स: (91)(44) 2250-2066 ई.मेल: chennai-patent@nic.in ❖ आन्ध्र प्रदेश, कर्नाटक, केरल, तमिलनाडु तथा पुडुचेरी राज्य क्षेत्र एवं संघ शासित क्षेत्र, लक्षद्वीप
2	पेटेंट कार्यालय, भारत सरकार बौद्धिक संपदा भवन, एनटॉप हिल डाकघर के समीप, एस. एम. रोड, एनटॉप हिल, मुम्बई - 400 037, फोन: (91)(22) 2413 7701, फैक्स: (91)(22) 2413 0387 ई.मेल: mumbai-patent@nic.in ❖ गुजरात, महाराष्ट्र, मध्य प्रदेश, गोआ तथा छत्तीसगढ़ राज्य क्षेत्र एवं संघ शासित क्षेत्र, दमन तथा दीव, दादर और नगर हवेली.	5	पेटेंट कार्यालय कोलकाता (प्रधान कार्यालय), बौद्धिक संपदा भवन, सीपी-2, सेक्टर-V, साल्ट लेक सिटी, कोलकाता- 700 091, भारत. फोन: (91)(33) 2367 1943/44/45/46/87 फैक्स/Fax: (91)(33) 2367 1988 ई.मेल: kolkata-patent@nic.in ❖ भारत का अवशेष क्षेत्र
3	पेटेंट कार्यालय दिल्ली, बौद्धिक संपदा भवन, प्लॉट सं. 32, सेक्टर - 14, द्वारका, नई दिल्ली - 110 075. फोन: (91)(11) 2808 1921-25 फैक्स: (91)(11) 2808 1920, 2808 1940 ई.मेल: delhi-patent@nic.in ❖ हरियाणा, हिमाचल प्रदेश, जम्मू तथा कश्मीर, पंजाब, राजस्थान, उत्तर प्रदेश, दिल्ली तथा उत्तरांचल राज्य क्षेत्रों, एवं संघ शासित क्षेत्र चंडीगढ़		

वेबसाइट: http://www.ipindia.nic.in
www.patentoffice.nic.in

पेटेंट अधिनियम, 1970 तथा पेटेंट (संशोधन) अधिनियम, 2005 अथवा पेटेंट (संशोधन) नियम, 2006 द्वारा वांछित सभी आवेदन, सूचनाएँ, विवरण या अन्य दस्तावेज या कोई शुल्क पेटेंट कार्यालय के केवल उपयुक्त कार्यालय में स्वीकृत होंगे ।

शुल्क: शुल्क या तो नकद रूप में या "Controller of Patents" के नाम में देय बैंक ड्राफ्ट या चेक के द्वारा भेजी जा सकती है जो उसी स्थान के किसी अनुसूचित बैंक में प्रदत्त हो जहाँ उपयुक्त कार्यालय स्थित हैं।

SPECIAL NOTICE

18 Months publication as required under Section 11A of the Patents Act, 1970 as amended by the Patents (Amendment) Act, 2005.

Notice is hereby given that any person at any time before the grant of Patent may give representation by way of opposition to the Controller of Patents at appropriate office on the ground and in a manner specified under section 25(1) of the Patents (Amendment) Act, 2005 read with Rule 55 of the Patents (Amendment) Rules, 2006.

Notice is also given that if any interested person requests for copies of the complete specification, drawing and abstract of any application already published, the photocopy of the same can be supplied by the Patent Office as per the jurisdiction on payment of prescribed fees of Rs.4/- per page. If any further details are required to be obtained, the same can be provided by the respective Patent Offices on request.

(**Chaitanya Prasad**)
CONTROLLER GENERAL OF PATENTS, DESIGNS & TRADE MARKS

SPECIAL NOTICE

Under the new provision of the Patents Act, 1970 as amended by the Patents (Amendment) Act, 2005 and Rules there under, Publication of the matter relating to Patents in the Official Gazette of India Part III, Section 2 has been discontinued and instead The Official Journal of the Patent Office is being published containing all the activities of The Patent Office such as publication of all the patent applications after 18th months , grant of patents & all other information in respect of the proceedings as required under the provisions of the Patents (Amendment) Act, 2005 and Rules thereunder on weekly basis on every **Friday**.

The Journal is uploaded in the website every Friday. So Paper form and CD-ROM form of the Journal are discontinued from 01/01/2009.

SPECIAL NOTICE

Every effort is being taken to publish all the patent applications under section 11(A) of the Patents Act. However, if duplication of publication of any application is found, then earlier date of publication will be taken for the purpose of provisional protection for applicant and Patent Office will grant Patent not before six months from the date of second publication, provided that there is there is no third party representation.

Early Publication:

The following patent applications have been published under section 11A (2) of The Patents (Amendment) Act 2005 and rule 24A of The Patents (Amendment) Rules, 2006. Any person may file representation by way of opposition to the Controller of Patents at the appropriate office against the grant of the patent in the prescribed manner under section 25(1) of the Patents (Amendment) Act 2005 read with the rule 55 of The Patents (Amendment) Rules, 2006:

(12) PATENT APPLICATION PUBLICATION

(21) Application No.1639/DEL/2013 A

(19) INDIA

(22) Date of filing of Application :31/05/2013

(43) Publication Date : 05/07/2013

(54) Title of the invention : MEDICINE FOR GENERAL MENTAL DISEASES

(51) International classification	:A61K	(71)**Name of Applicant :**
(31) Priority Document No	:NA	**1)PRITPAL SINGH SODHI**
(32) Priority Date	:NA	Address of Applicant :BAGICHI JIWAN SINGH NABHA
(33) Name of priority country	:NA	GATE PATIALA PUNJAB 147001 India
(86) International Application No	:NA	(72)**Name of Inventor :**
Filing Date	:NA	**1)PRITPAL SINGH SODHI**
(87) International Publication No	: NA	
(61) Patent of Addition to Application Number	:NA	
Filing Date	:NA	
(62) Divisional to Application Number	:NA	
Filing Date	:NA	

(57) Abstract :
It cure illness of unsleepiness and cure all type of internal wounds cure kidney tone up all nervous system and stimulate glands it controll diabites also

No. of Pages : 3 No. of Claims : 7

(12) PATENT APPLICATION PUBLICATION
(21) Application No.4847/DELNP/2013 A
(19) INDIA
(22) Date of filing of Application :31/05/2013
(43) Publication Date : 05/07/2013

(54) Title of the invention : BREWED BEVERAGE APPLIANCE AND METHOD

(51) International classification :A47J31/42
(31) Priority Document No :13/231021
(32) Priority Date :13/09/2011
(33) Name of priority country :U.S.A.
(86) International Application No :PCT/US2012/043928
Filing Date :25/06/2012
(87) International Publication No :WO 2013/039585
(61) Patent of Addition to Application Number :NA
Filing Date :NA
(62) Divisional to Application Number :NA
Filing Date :NA

(71)**Name of Applicant :**
1)CONAIR CORPORATION
Address of Applicant :One Cummings Point Road Stamford Connecticut 06902 U.S.A.
(72)**Name of Inventor :**
1)LAI Kin Man
2)FUNG Kam Fai
3)SCHNABEL Barbara Lynn
4)ORENT Jill Frances Kreutzer

(57) Abstract :
A brewed beverage appliance uses a specialized pre packaged beverage container and a related method of brewing a beverage. The container comprises a cup shaped base having openings at the bottom. A plurality of roasted whole coffee beans are contained therein. The appliance has a blade that punctures the cup and then grinds the beans while they are still in the cup. Heated water is delivered to the cup and passes through the ground coffee causing brewed coffee to emit from the openings in the bottom of the cup and into a container such as a coffee mug.

No. of Pages : 59 No. of Claims : 49

(12) PATENT APPLICATION PUBLICATION
(21) Application No.1494/DEL/2013 A
(19) INDIA
(22) Date of filing of Application :20/05/2013
(43) Publication Date : 05/07/2013

(54) Title of the invention : A NOVEL METHOD AND SYSTEM OF CAPACITOR VOLTAGE BALANCING OF A THREE-PHASE NEUTRAL-PONT CLAMPED BI-DIRECTIONAL RECTIFIER

(51) International classification :H02J
(31) Priority Document No :NA
(32) Priority Date :NA
(33) Name of priority country :NA
(86) International Application No :NA
Filing Date :NA
(87) International Publication No : NA
(61) Patent of Addition to Application Number :NA
Filing Date :NA
(62) Divisional to Application Number :NA
Filing Date :NA

(71)**Name of Applicant :**
1)LANGER, NITIN
Address of Applicant :29/9 TRIKUTA NAGAR JAMMU (JAMMU AND KASHMIR) PIN-180004 INDIA
2)BHAT, ABDUL HAMID
(72)**Name of Inventor :**
1)LANGER, NITIN
2)BHAT, ABDUL HAMID

(57) Abstract :
A new method and system of balancing DC-bus capacitor voltages of a three-phase neutral-point clamped bidirectional converter using minimum number of switching transitions of optimized switching sequences is disclosed. The present invention describes how the capacitor voltage unbalancing in neutral-point clamped converters can be balanced by virtue of changing the number of sampling periods within each sector & its regions depending upon amount of DC-bus capacitor voltage unbalance. Since each sampling period is associated with respective vectors and their time of implementation, thus changing the number of sampling periods within each sector & its regions changes the effective time of implementation of various vectors resulting in balancing of capacitor voltages. As number of sampling periods per cycle and switching sequence within each sampling period is unaltered, voltage balance is achieved at minimum number of switching transitions for a selected switching frequency.

No. of Pages : 34 No. of Claims : 11

(12) PATENT APPLICATION PUBLICATION
(21) Application No.2123/MUM/2013 A
(19) INDIA
(22) Date of filing of Application :24/06/2013
(43) Publication Date : 05/07/2013

(54) Title of the invention : CONNECTION OF ELECTRICAL WIRE LEAD WITH PIN PLUG, BY PULL-COMPRESSION CLAMPING

(51) International classification :H01R4/00
(31) Priority Document No :NA
(32) Priority Date :NA
(33) Name of priority country :NA
(86) International Application No :NA
Filing Date :NA
(87) International Publication No : NA
(61) Patent of Addition to Application Number :NA
Filing Date :NA
(62) Divisional to Application Number :NA
Filing Date :NA

(71)**Name of Applicant :**
1)VISHRAM Y. ABHYANKAR
Address of Applicant :A/302, AMEYA R.B.I. C.H.S., NEW PRABHADEVI ROAD, OPP. MARATHE UDYOG BHAWAN, PRABHADEVI, MUMBAI-400 025 Maharashtra India
(72)**Name of Inventor :**
1)VISHRAM Y. ABHYANKAR

(57) Abstract :
The invention relates to electrical connection between electrical wire lead with pin plug Wire lead is placed with the surface of the plug, through the transverse hole of the clamping block, with and /or without the cover, and /or without passing through the transverse hole. Invented mechanism, method clamping of wire lead is the result of Pull compression, by rotational fasten fixing of pin on the screw threaded part of the clamping block, also fixes the connection with all parts together as cover, plug, pin and block, wire lead. Thus connection is established between the pin & the wire lead by rotation of pin on the block jst by hands and without using any tool for it.

No. of Pages : 8 No. of Claims : 4

(12) PATENT APPLICATION PUBLICATION
(21) Application No.2146/MUM/2013 A
(19) INDIA
(22) Date of filing of Application :25/06/2013
(43) Publication Date : 05/07/2013

(54) Title of the invention : SUGAR FREE FRUIT COMPOSITION HAVING MICROBIOLOGICALLY EFFECTIVE AMOUNT OF ZINC OXIDE NANO PARTICLES AS PRESERVATIVE

(51) International classification	:A23L3/358
(31) Priority Document No	:NA
(32) Priority Date	:NA
(33) Name of priority country	:NA
(86) International Application No	:NA
Filing Date	:NA
(87) International Publication No	: NA
(61) Patent of Addition to Application Number	:NA
Filing Date	:NA
(62) Divisional to Application Number	:NA
Filing Date	:NA

(71)**Name of Applicant :**
1)DR. RAJESH CHANDRAKANT PATIL
Address of Applicant :BHAVAN'S COLLEGE, ANDHERI (WEST), MUMBAI 400058, Maharashtra India
(72)**Name of Inventor :**
1)DR RAJESH C PATIL
2)DHANASHREE TALEKAR

(57) Abstract :
In one of the aspect of the invention it is provides a method for Synthesis of ZnO nanoparticles by precipitation method is provided, ZnO nanoparticles, a 0.45 M aqueous solution of zinc nitrate (Zn (N03)2.4H20) and 0.9 M aqueous solution of sodium hydroxide (NaOH) are prepared in distilled water. Then, the beaker containing NaOH solution is heated at the temperature of about 55°C. The Zn (N03)2 solutions are added drop wise to the above heated solution under high speed stirring. The beaker is sealed at this condition for 2 h. The precipitated ZnO nanoparticles are cleaned with deionized water and ethanol and then dried in air atmosphere at about 60°C. In an most important aspect of the invention fruit jam comprising zinc oxide nanoparticles is prepared, without addition of sugar as an sweeting agent or as preservative, which is been completely replaced by the ZnO nanoparticles, In an another aspect of the invention a method for the preparation of sugar free fruit jam containing ZnO is provided,

No. of Pages : 15 No. of Claims : 8

(12) PATENT APPLICATION PUBLICATION
(21) Application No.2147/MUM/2013 A
(19) INDIA
(22) Date of filing of Application :25/06/2013
(43) Publication Date : 05/07/2013

(54) Title of the invention : SYNTHESIS AND CHARACTERIZATION OF ZINC OXIDE NANO-PARTICLES SYNTHESIZED USING ELECTRO-PLATNG WASTE

(51) International classification	:C25D5/00, C22B19/00
(31) Priority Document No	:NA
(32) Priority Date	:NA
(33) Name of priority country	:NA
(86) International Application No	:NA
Filing Date	:NA
(87) International Publication No	: NA
(61) Patent of Addition to Application Number	:NA
Filing Date	:NA
(62) Divisional to Application Number	:NA
Filing Date	:NA

(71)**Name of Applicant :**
1)DR RAJESH CHANDRAKANT PATIL
Address of Applicant :BHAVAN'S COLLEGE, ANDHERI (WEST), MUMBAI 400058, Maharashtra India
(72)**Name of Inventor :**
1)DR RAJESH C PATIL
2)DHANASHREE TALEKAR
3)DR M. G. BODHANKAR
4)PROF UTTAM B. WAGHMARE
5)PROF MRS SARITA M WADMARE
6)PROF MRS SUNITA S DANGE
7)PROF PARIMITA V JADHAV
8)PROF SHARAD P CHOUDHARI
9)PROF MADHUKAR A BADGUJAR

(57) Abstract :
In one of the aspect of the invention it is provided that the process for preparing Nano-particles from ZnO is provided, the process involves co-precipitation method. 0.02 M aqueous solution of zinc acetate di-hydrate is put into 100 ml of distilled water under vigorous stirring. After 10 min stirring, 3mLof Electroplating waste was added the above solution. After addition of extract, 2.0 M aqueous sodium hydroxide solution is introduced into the above aqueous solution drop wise, resulting in a white aqueous solution at pH 12, which is then placed on magnetic stirrer for 2 hr. The precipitate is then taken out and washed repeatedly with distilled water followed by ethanol to remove the impurities for the final products. Then a white powder is obtained after drying at 60 °C in vacuum oven overnight.

No. of Pages : 10 No. of Claims : 7

(12) PATENT APPLICATION PUBLICATION
(21) Application No.2164/MUM/2013 A
(19) INDIA
(22) Date of filing of Application :26/06/2013
(43) Publication Date : 05/07/2013

(54) Title of the invention : SELF SANITISING SHAVING DEVICE

(51) International classification :B26B21/40
(31) Priority Document No :NA
(32) Priority Date :NA
(33) Name of priority country :NA
(86) International Application No :NA
Filing Date :NA
(87) International Publication No : NA
(61) Patent of Addition to Application Number :NA
Filing Date :NA
(62) Divisional to Application Number :NA
Filing Date :NA

(71)**Name of Applicant :**
1)LASER SHAVING (INDIA) PVT. LTD.
Address of Applicant :5TH FLOOR, MALHOTRA HOUSE, OPP. G.P.O., FORT, MUMBAI: 400 001 Maharashtra India
(72)**Name of Inventor :**
1)DAHANUKAR DILIP S.

(57) Abstract :
The invention provides for a shaving device for increased hygiene in the shaving process. During the shaving process organic material in the form of the minute bits of dead skin and cut pieces of hair get lodged in the shaving head. This organic material forms a breeding ground for bacteria and fungi. The invention consists of coating the shaving device with oily liquid containing a chemical sanitizer which works as anti microbial agent and keeps the shaving device free from germs and thus protect the shaver from infections.

No. of Pages : 7 No. of Claims : 6

(12) PATENT APPLICATION PUBLICATION
(19) INDIA
(22) Date of filing of Application :15/03/2013
(21) Application No.787/MUM/2013 A
(43) Publication Date : 05/07/2013

(54) Title of the invention : APPARATUS & METHODS FOR SENSING CONTROL SURFACE DEFLECTION

(51) International classification	:G05D1/00, B64C13/00
(31) Priority Document No	:NA
(32) Priority Date	:NA
(33) Name of priority country	:NA
(86) International Application No	:NA
Filing Date	:NA
(87) International Publication No	: NA
(61) Patent of Addition to Application Number	:NA
Filing Date	:NA
(62) Divisional to Application Number	:NA
Filing Date	:NA

(71)**Name of Applicant :**
1)AIRCRAFT UPGRADE RESEARCH & DESIGN CENTRE (AURDC)
Address of Applicant :HINDUSTAN AERONAUTICS LIMITED, NASIK DIVISION, OJHAR TOWNSHIP POST OFFICE, OJHAR (MIG), NASIK-422207, Maharashtra India
(72)**Name of Inventor :**
1)SALAWADE UTTAM G
2)DHAKE RAJENDRA D
3)MOHAMED IMTIAZ

(57) Abstract :
Automatic flight control system (Autopilot) is installed on fighter aircraft. It has Single channel, two channel & three channel Autopilot system. Measurement and adjustment of control surface deflections of Automatic Flight Control System (AFCS) is one of the complex and time consuming activity. This activity is performed at Final assembly shops and during serviceability checks for preflight and post flight operation of aircraft at flight hanger and IAF bases. For checking AFCS, the deflection angles of control surfaces (viz. ailerons, stabilizers, rudders) are measured using optical quadrant or scale protractor arrangement for adjustment of transmission ratios; also mathematical operations viz. addition, subtraction and averaging , as well as DC/AC voltage measurement are carried out. The present methodology for measurement of control surface deflection dates back to 1980s which has various limitations and disadvantages. Apparatus & Methods for sensing Control Surface Deflection was indigenously developed innovative technology which overcomes the limitations and disadvantages of present technology. It is user friendly and consists of simple architecture which measures and displays angles with improved accuracy (< 30 Arc sec) in digital form and does automatic arithmetical calculations. Indigenously designed and developed Apparatus & Methods for sensing Control Surface Deflection was demonstrated at MiG-21/MiG-27 operating squadrons of various IAF bases. IAF found that the new equipment is very effective and user friendly. The new Apparatus & Methods for sensing Control Surface Deflection is simple, user friendly and easy to handle. Manual calculations/ human error due to manual calculations is avoided and more accurate readings/ results are achieved. The AFCS flight snags reduced drastically after attempting rectification using new equipment.

No. of Pages : 14 No. of Claims : 3

(12) PATENT APPLICATION PUBLICATION
(19) INDIA
(22) Date of filing of Application :15/03/2013
(21) Application No.788/MUM/2013 A
(43) Publication Date : 05/07/2013

(54) Title of the invention : METHOD FOR TRACING INTERCONNECTION CIRCUIT BETWEEN ELECTRICAL SYSTEMS.

(51) International classification	:B64F5/00, G06F17/00
(31) Priority Document No	:NA
(32) Priority Date	:NA
(33) Name of priority country	:NA
(86) International Application No	:NA
Filing Date	:NA
(87) International Publication No	: NA
(61) Patent of Addition to Application Number	:NA
Filing Date	:NA
(62) Divisional to Application Number	:NA
Filing Date	:NA

(71)**Name of Applicant :**
1)AIRCRAFT UPGRADE RESEARCH & DESIGN CENTRE (AURDC)
Address of Applicant :HINDUSTAN AERONAUTICS LIMITED, NASIK DIVISION, OJHAR TOWNSHIP POST OFFICE, OJHAR (MIG), NASIK-422207 Maharashtra India
(72)**Name of Inventor :**
1)S D BEHERA

(57) Abstract :
A fighter aircraft has number of electrical and avionics systems connected with each other by wires. The interconnection can be between two systems or between more than one system making the connection complex. For understanding and for reference, there are interconnection circuit diagrams. Due to the complex connections of various systems the drawings spread across number of drawing sheets or in form of Albums. For rectifying any system snag on aircraft, engineers refer all these drawings/Albums to analyze the snag and have to trace the interconnection. This tracing of connection is a time consuming activity. A method for tracing interconnection circuit between electrical systems is derived in which database of the aircraft system connectors and its details of connections w.r.t each pin is created. The method retrieves the connection details and generates end-to-end trace of connection into a tracing diagram.

No. of Pages : 5 No. of Claims : 2

(12) PATENT APPLICATION PUBLICATION
(21) Application No.789/MUM/2013 A
(19) INDIA
(22) Date of filing of Application :15/03/2013
(43) Publication Date : 05/07/2013

(54) Title of the invention : ARC SUPPRESSING CIRCUIT FOR MICRO-SWITCHES.

(51) International classification :H01H60/00
(31) Priority Document No :NA
(32) Priority Date :NA
(33) Name of priority country :NA
(86) International Application No :NA
Filing Date :NA
(87) International Publication No : NA
(61) Patent of Addition to Application Number :NA
Filing Date :NA
(62) Divisional to Application Number :NA
Filing Date :NA

(71)**Name of Applicant :**
1)AIRCRAFT UPGRADE RESEARCH & DESIGN CENTRE (AURDC)
Address of Applicant :HINDUSTAN AERONAUTICS LIMITED, NASIK DIVISION, OJHAR TOWNSHIP POST OFFICE, OJHAR (MIG), NASIK-422207 Maharashtra India
(72)**Name of Inventor :**
1)SALAWADE UTTAM G
2)BEHERA S D
3)VELU BRIJESH P

(57) Abstract :
High rate of failure of microswitch type D703 was observed in a circuit. Defect investigation revealed that cases of malfunctioning of microswitches type D703 are mainly attributed to failure of leaf spring mechanism & welding of contacts inside the microswitch. It was observed that sparking at contacts was during opening of contacts, due to inductive circuit change-over, i.e. heavy return current of two relay windings through contacts of microswitch. The circuit modification mainly aims to limit the return current of two relays passing through the microswitch contacts through two new low current operated relays. The return current of these two new low current operated relays will be passed through microswitch contacts. Thus reducing the arcing current during opening of micrswitch contacts.

No. of Pages : 6 No. of Claims : 3

(12) PATENT APPLICATION PUBLICATION
(21) Application No.1975/MUM/2013 A
(19) INDIA
(22) Date of filing of Application :10/06/2013
(43) Publication Date : 05/07/2013

(54) Title of the invention : METAL NANOWIRES DECORATED ONE DIMENSIONAL CARBON NANOMATERIALS BASED FUEL CELL ELECTRODES

(51) International classification	:H01M8/00, H01M4/00
(31) Priority Document No	:NA
(32) Priority Date	:NA
(33) Name of priority country	:NA
(86) International Application No	:NA
Filing Date	:NA
(87) International Publication No	: NA
(61) Patent of Addition to Application Number	:NA
Filing Date	:NA
(62) Divisional to Application Number	:NA
Filing Date	:NA

(71)**Name of Applicant :**
1)DR. PRAKASH RAVINDRA SOMANI
Address of Applicant :VIJAYNAGAR, BLD. NO. 3, B-14, DHAYARI, NEAR DHARESHWAR MANDIR, SINHGAD ROAD, PUNE - 411041, Maharashtra India
(72)**Name of Inventor :**
1)DR. PRAKASH RAVINDRA SOMANI
2)DR. SAVITA PRAKASH SOMANI

(57) Abstract :
Metal nanowires decorated one dimensional (ID) carbon nanomaterials (carbon nanotubes and nanofibers) based fuel cell electrodes (both anode and cathode) along with method for fabricating such electrodes is disclosed. Metal nanowires acts as catalysts in electrochemical oxidation - reduction processes in fuel cell.

No. of Pages : 10 No. of Claims : 8

(12) PATENT APPLICATION PUBLICATION
(21) Application No.1890/MUM/2012 A
(19) INDIA
(22) Date of filing of Application :30/06/2012
(43) Publication Date : 05/07/2013

(54) Title of the invention : SINGLE CYLINDER PNEUMATIC ENGINE

(51) International classification :F04B53/00
(31) Priority Document No :NA
(32) Priority Date :NA
(33) Name of priority country :NA
(86) International Application No :NA
Filing Date :NA
(87) International Publication No : NA
(61) Patent of Addition to Application Number :NA
Filing Date :NA
(62) Divisional to Application Number :NA
Filing Date :NA

(71)**Name of Applicant :**
1)Jimil M. Shah
Address of Applicant :G-1 Sheel Residency Nr. Bal Bhavan Karelibaug Vadodara-390018 Gujarat India
2)Akash B. Pandey
(72)**Name of Inventor :**
1)Jimil M. Shah
2)Akash B. Pandey

(57) Abstract :
This invention relates to compressed air operated single cylinder reciprocating engine having piston cylinder arrangement actuated by pneumatic air pressure alone with the help of valves operated by an specially designed and optimized dual lobed cam operated mechanism for producing mechanical power without burning of fuel. The rise and fall profiles of the dual lobed cam and their operating angles are optimized by evaluating several profiles and cam angles in order to maximize the power produced by the compact single cylinder reciprocating engine which can be used to drive two-wheeled automobiles and small equipments in stationary applications.

No. of Pages : 19 No. of Claims : 10

(12) PATENT APPLICATION PUBLICATION
(21) Application No.3546/MUM/2012 A
(19) INDIA
(22) Date of filing of Application :17/12/2012
(43) Publication Date : 05/07/2013

(54) Title of the invention : SONAR BASED RAIL TRACK INSPECTION SYSTEM

(51) International classification	:B61L23/00, B61L99/00
(31) Priority Document No	:NA
(32) Priority Date	:NA
(33) Name of priority country	:NA
(86) International Application No	:NA
Filing Date	:NA
(87) International Publication No	: NA
(61) Patent of Addition to Application Number	:NA
Filing Date	:NA
(62) Divisional to Application Number	:NA
Filing Date	:NA

(71)**Name of Applicant :**
1)HIMANSHU KUMAR AGRAWAL
Address of Applicant :H.NO. 1671 SECTOR 9B1 SAKET NAGAR, HABIBGANJ, BHOPAL, PIN:462024 Madhya Pradesh India
(72)**Name of Inventor :**
1)HIMANSHU KUMAR AGRAWAL

(57) Abstract :
Today rail transport system is the most widely used transport system. On an average 9 car train has seating capacity of 876 passengers and 1,752 standing passengers, a total of 2,628 while a 12 car train has a seating capacity of 1,168 and 2,336 passengers, a total of 3,504 passengers. On an average 17-20 accidents occur in lndia in a year. So in case of accidents it results in loss of precious lives and property. As per statistics reports the number of persons facing train accidents are very large which results in fatal injuries also the major causes of rail accidents are head on collision, rear collision and natural track faults& antisocial activities. Recently a system has been developed to reduce head on collision and rear collision. But there is still a need to develop a system that will prevent train accidents due to track faults/human interference. Keeping this in mind this system has been designed which will report the track fault initiation much before the fault becomes severe to cause accidents to happen and thus the rail transport will become more safe and secure. Expectedly the time gap between the initiation of fault and this fault turning into severe fault condition could be around 6-8 months minimum.

No. of Pages : 21 No. of Claims : 8

(12) PATENT APPLICATION PUBLICATION
(21) Application No.641/MUM/2013 A
(19) INDIA
(22) Date of filing of Application :04/03/2013
(43) Publication Date : 05/07/2013

(54) Title of the invention : DEVELOPMENT OF REJUVENATION TECHNOLOGY FOR LANDING GEARS OF FIGHTER AIRCRAFT

(51) International classification :B64C25/00
(31) Priority Document No :NA
(32) Priority Date :NA
(33) Name of priority country :NA
(86) International Application No :NA
Filing Date :NA
(87) International Publication No : NA
(61) Patent of Addition to Application Number :NA
Filing Date :NA
(62) Divisional to Application Number :NA
Filing Date :NA

(71)**Name of Applicant :**
1)AIRCRAFT UPGRADE RESEARCH & DESIGN CENTRE (AURDC)
Address of Applicant :HINDUSTAN AERONAUTICS LIMITED, NASIK DIVISION, OJHAR TOWNSHIP POST OFFICE, OJHAR (MIG), NASIK-422207 Maharashtra India
(72)**Name of Inventor :**
1)R P KHAPLI
2)P PARAMESWARAN
3)M VERMA
4)NILESH S CHAUDHARI

(57) Abstract :
During manufacturing, residual compressive stress is introduced by shot peening on major components of main landing gear strut. It has been experimentally established that the magnitude of residual compressive stress introduced at the time of manufacturing reduces as the number of landing increases, thus reducing the fatigue life of the landing gears. This invention relates to developing rejuvenation technology for increasing the fatigue life of MiG-27 Main Landing Gears. The invention has established that the residual compressive stress can be reintroduced by removing the layer of material, which has undergone fatigue damage during exploitation from stress critical zones subject to meeting the requirements of minimum wall thickness at these zones.

No. of Pages : 9 No. of Claims : 2

(12) PATENT APPLICATION PUBLICATION
(21) Application No.643/MUM/2013 A
(19) INDIA
(22) Date of filing of Application :04/03/2013
(43) Publication Date : 05/07/2013

(54) Title of the invention : DEVELOPMENT OF OXY-PARKERIZING TECHNOLOGY FOR ULTRA HIGH STRENGTH STEEL 40KHN2SMA

(51) International classification	:C25D11/36, C25F1/06
(31) Priority Document No	:NA
(32) Priority Date	:NA
(33) Name of priority country	:NA
(86) International Application No	:NA
Filing Date	:NA
(87) International Publication No	: NA
(61) Patent of Addition to Application Number	:NA
Filing Date	:NA
(62) Divisional to Application Number	:NA
Filing Date	:NA

(71)**Name of Applicant :**
1)AIRCRAFT UPGRADE RESEARCH & DESIGN CENTRE (AURDC)
Address of Applicant :HINDUSTAN AERONAUTICS LIMITED, NASIK DIVISION, OJHAR TOWNSHIP POST OFFICE, OJHAR (MIG), NASIK-422207 Maharashtra India
(72)**Name of Inventor :**
1)M VERMA
2)NILESH S CHAUDHARI
3)KANHAIYA LAL

(57) Abstract :
Oxy-parkerizing is a most widely used metal protection process for the surface treatment and finishing of ferrous metals in Aircraft industry. The principle of oxy-parkerizing is that the surface of a steel part becomes coated with a ferrous phosphate layer after immersion in a phosphoric acid solution. All oxy-parkerizing baths are acidic and attack the metal to some extent. Hydrogen evolution is certain but the risk of embrittlement is small. Though risk of hydrogen embrittlement is less, but it cannot be ruled out in high strength steel like 40KHN2SMA. High strength steel is most vulnerable to this type of hydrogen embrittlement.

No. of Pages : 6 No. of Claims : 1

(12) PATENT APPLICATION PUBLICATION
(21) Application No.639/MUM/2013 A
(19) INDIA
(22) Date of filing of Application :04/03/2013
(43) Publication Date : 05/07/2013

(54) Title of the invention : DESIGN & DEVELOPMENT OF PERFORATED PLATE TO SIMULATE THE FLOW PARAMETERS OF AIR TO AIR RADIATOR OF FIGHTER AIRCRAFT.

(51) International classification :F01P11/00
(31) Priority Document No :NA
(32) Priority Date :NA
(33) Name of priority country :NA
(86) International Application No :NA
Filing Date :NA
(87) International Publication No : NA
(61) Patent of Addition to Application Number :NA
Filing Date :NA
(62) Divisional to Application Number :NA
Filing Date :NA

(71)**Name of Applicant :**
1)AIRCRAFT UPGRADE RESEARCH & DESIGN CENTRE (AURDC)
Address of Applicant :HINDUSTAN AERONAUTICS LIMITED, NASIK DIVISION, OJHAR TOWNSHIP POST OFFICE, OJHAR (MIG), NASIK-422207 Maharashtra India
(72)**Name of Inventor :**
1)PARESH
2)M. HARUN SAIFI

(57) Abstract :
The MiG-21 BISON aircraft is a single seat tactical supersonic fighter interceptor of Russian origin. The Air to Air Radiator (AAR) 21.7604-10 is the most important unit of air conditioning system of this aircraft. The first stage of cooling of engine bleed air is done by AAR. A large number of cases of wire mesh strand breakage & rivet loosening were observed during overhaul of Air to Air Radiator of BISON ac. The loosened rivet & wire strands after its breakage can enter into engine and cause damage to engine. Hence it was decided that these wire meshes should be replaced by perforated plates. Therefore, in this modification the existing wire mesh assemblies were replaced by two perforated plates, which were welded to the inner skin of Air to Air radiator .Open area calculation through wire mesh were carried out to provide same amount of opening on plates by means of drilled holes.

No. of Pages : 9 No. of Claims : 2

(12) PATENT APPLICATION PUBLICATION
(21) Application No.640/MUM/2013 A
(19) INDIA
(22) Date of filing of Application :04/03/2013
(43) Publication Date : 05/07/2013

(54) Title of the invention : DEVELOPMENT OF TEFLON BONDED SEALING VALVE FOR PNEUMATIC APPLICATION FOR FIGHTER AIRCRAFT.

(51) International classification :B64D47/00
(31) Priority Document No :NA
(32) Priority Date :NA
(33) Name of priority country :NA
(86) International Application No :NA
Filing Date :NA
(87) International Publication No : NA
(61) Patent of Addition to Application Number :NA
Filing Date :NA
(62) Divisional to Application Number :NA
Filing Date :NA

(71)**Name of Applicant :**
1)AIRCRAFT UPGRADE RESEARCH & DESIGN CENTRE (AURDC)
Address of Applicant :HINDUSTAN AERONAUTICS LIMITED, NASIK DIVISION, OJHAR TOWNSHIP POST OFFICE, OJHAR (MIG), NASIK-422207 Maharashtra India
(72)**Name of Inventor :**
1)A OHMKAR
2)S D VISPUTE
3)R P KHAPLI

(57) Abstract :
The MiG21 aircraft is a single seat tactical supersonic fighter aircraft. 695000 Electro Pneumatic Valve is used in Drag chute Control System of MIG 21 ac. In original design rubber bounded valve is used in Electro Pneumatic Valve. As valve is in high temperature zone, there had been large number of failure of valve. To prevent the failure, a trial have been done using valve seat arrangement that uses a TEFLON valve seat used in Electro Pneumatic Valve. The TEFLON seat is manufactured with male thread and groove for screwing. The valve body is manufactured with corresponding female thread. After assembly of seat in valve, the screwing groove is removed by machining. After assembly of TEFLON valve seat in Electro Pneumatic Valve, testing of valve have been carried out which simulate high, low and room temperature. Result of testing found satisfactory.

No. of Pages : 6 No. of Claims : 1

(12) PATENT APPLICATION PUBLICATION
(21) Application No.1660/MUM/2012 A
(19) INDIA
(22) Date of filing of Application :06/06/2012
(43) Publication Date : 05/07/2013

(54) Title of the invention : A COMPUTER IMPLEMENTED SYSTEM AND METHOD FOR FACILITATING SELECTION OF BEDDING PRODUCTS

(51) International classification :G06F17/60
(31) Priority Document No :NA
(32) Priority Date :NA
(33) Name of priority country :NA
(86) International Application No :NA
Filing Date :NA
(87) International Publication No :N/A
(61) Patent of Addition to Application Number :NA
Filing Date :NA
(62) Divisional to Application Number :NA
Filing Date :NA

(71)**Name of Applicant :**
1)KANKARIYA KUNDAN ZUMBERLAL
Address of Applicant :JEEVANDHARA, MANIKNAGAR, BURUDGOAN ROAD, AHMEDNAGAR - 414001, Maharashtra India
2)KANKARIYA SMITA KUNDAN
(72)**Name of Inventor :**
1)KANKARIYA KUNDAN ZUMBERLAL
2)KANKARIYA SMITA KUNDAN

(57) Abstract :
A computer implemented system and method for facilitating selection of bedding products are provided. The system includes a repository, an assigning module, a user interface, a comparator and a suggestion module. The repository stores the information corresponding to classification of bedding. The repository stores a first set of attributes and corresponding range of values and a second set of attributes and corresponding values. The assigning module assigns weight scores to each of the range of values corresponding to the first set of attributes and to each of the values corresponding to the second set of attributes. The user interface receives physiological parameters corresponding to a user. The comparator compares the physiological parameters with the first set of attributes and second set of attributes and select weight scores. The suggestion module suggests a bedding product suitable for said user and suggests therapeutic remedies to the user.

No. of Pages : 22 No. of Claims : 10

(12) PATENT APPLICATION PUBLICATION
(21) Application No.644/MUM/2013 A
(19) INDIA
(22) Date of filing of Application :04/03/2013
(43) Publication Date : 05/07/2013

(54) Title of the invention : DESIGN & DEVELOPMENT OF COMPARTMENT COOLING SYSTEM OF FIGHTER AIRCRAFT.

(51) International classification :B64D13/00
(31) Priority Document No :NA
(32) Priority Date :NA
(33) Name of priority country :NA
(86) International Application No :NA
Filing Date :NA
(87) International Publication No : NA
(61) Patent of Addition to Application Number :NA
Filing Date :NA
(62) Divisional to Application Number :NA
Filing Date :NA

(71)**Name of Applicant :**
1)AIRCRAFT UPGRADE RESEARCH & DESIGN CENTRE (AURDC)
Address of Applicant :HINDUSTAN AERONAUTICS LIMITED, NASIK DIVISION, OJHAR TOWNSHIP POST OFFICE, OJHAR (MIG), NASIK-422207 Maharashtra India
(72)**Name of Inventor :**
1)PARESH GUPTA

(57) Abstract :
As per Air HQ task directive no Proj/25/2003, designing of Compartment Cooling System (CCS) was included as a part of MiG27 Upgrade programme to upgrade CCS. During upgradation of Compartment Cooling System of MiG27M aircraft old avionics Line Replaceable Units (LRUs) have been replaced by the new LRUs in two configurations i.e: a) Configuration-1 (Upgraded avionics suite without TAKSHAK units): This configuration involves the installation of five LRUs, b) Configuration 2: This configuration involves installation of Configuration-1 LRUs along with installation of three LRUs of Radar Warning Jamming system (Project TAKSHAK). Detailed flow analysis regarding distribution of air through various LRUs of upgraded ac fs carried out with the help of Continuity & Bernoullis equation, to ensure appropriate flow distribution in respective new LRUs, head losses during flow have also appropriately taken into account. Ground & Flight evaluation of cooling performance to respective avionics units was carried out and it was found satisfactory. Flight & Ground trials for Configuration 1 have been completed in March 2004 while ground trials for Configuration 2 has completed in April 2011.This invention has helped to upgrade the Compartment Cooling System indigenously using design and increased the performance of Compartment Cooling System as per new specifications.

No. of Pages : 7 No. of Claims : 2

(12) PATENT APPLICATION PUBLICATION
(21) Application No.1265/CHE/2012 A
(19) INDIA
(22) Date of filing of Application :30/03/2012
(43) Publication Date : 05/07/2013

(54) Title of the invention : SEA WATER HYDRO-ELECTRIC POWER GENERATION

(51) International classification :F03B
(31) Priority Document No :NA
(32) Priority Date :NA
(33) Name of priority country :NA
(86) International Application No :NA
Filing Date :NA
(87) International Publication No : NA
(61) Patent of Addition to Application Number :NA
Filing Date :NA
(62) Divisional to Application Number :NA
Filing Date :NA

(71)**Name of Applicant :**
1)NATARAJAN RANGA GANAPATHY
Address of Applicant :S/O N. NATARAJAN, 2/28, SCHOOL 1ST STREET, PALAVAKKAM, CHENNAI - 600 041 Tamil Nadu India
(72)**Name of Inventor :**
1)NATARAJAN RANGA GANAPATHY

(57) Abstract :
A system for generating electricity by converting sea into hydro electricity generating reservoir with unique concrete construction with apparatus to allow flow of water with kinetic motion consisting of turbine for generating electrical energy and propellers to take water back to the sea at only fraction of energy generated under the system

No. of Pages : 9 No. of Claims : 5

Publication After 18 Months:

The following Patent Applications have been published under Section 11A (3) of The Patents (Amendment) Act, 2005. Any Person may file representation by way of opposition to the Controller of Patents at the appropriate office against the grant of the patent in the prescribed manner under section 25(1) of the Patents (Amendment) Act, 2005 read with the rule 55 of The Patents (Amendment) Rules, 2006:

(12) PATENT APPLICATION PUBLICATION

(21) Application No.3861/DEL/2011 A

(19) INDIA

(22) Date of filing of Application :29/12/2011

(43) Publication Date : 05/07/2013

(54) Title of the invention : AN IMPROVED PROCESS FOR PREPARATION OF A FLUOROCARBON BROMIDE

(51) International classification	:C10C
(31) Priority Document No	:NA
(32) Priority Date	:NA
(33) Name of priority country	:NA
(86) International Application No	:NA
Filing Date	:NA
(87) International Publication No	:NA
(61) Patent of Addition to Application Number	:NA
Filing Date	:NA
(62) Divisional to Application Number	:NA
Filing Date	:NA

(71)**Name of Applicant :**

1)SRF LIMITED

Address of Applicant :BLOCK-C, SECTOR 45, UNICREST BUILDING, GURGAON, HARYANA (INDIA);

(72)**Name of Inventor :**

1)IYENGER, SARATHY
2)PHILIPS, MARIANO
3)KAVEERIKKANNAN, NAGARAJAN
4)RAJAMANI, NATHAN
5)MANICKAM DEVAN
6)DEVAREDDY, RAJESH
7)SAXENA, RAHUL
8)ANAND, RAJEEP

(57) Abstract :

The present invention relates to a process for the preparation of perfluoroethyl bromide by reacting tetrafluoroethylene with bromine and hydrogen fluoride in the presence of a lewis acid catalyst and chlorinating agent at a temperature ranging from 60-170°C. The process of current invention uses readily available raw materials to obtain the product with good conversion and high yield under easy operating conditions.

No. of Pages : 16 No. of Claims : 16

(12) PATENT APPLICATION PUBLICATION
(19) INDIA
(22) Date of filing of Application :29/12/2011
(21) Application No.3862/DEL/2011 A
(43) Publication Date : 05/07/2013

(54) Title of the invention : PROGRAMMABLE PREDICATION LOGIC IN COMMAND STREAMER INSTRUCTION EXECUTION

(51) International classification :G12B
(31) Priority Document No :NA
(32) Priority Date :NA
(33) Name of priority country :NA
(86) International Application No :NA
Filing Date :NA
(87) International Publication No :NA
(61) Patent of Addition to Application Number :NA
Filing Date :NA
(62) Divisional to Application Number :NA
Filing Date :NA

(71)**Name of Applicant :**
1)INTEL CORPORATION
Address of Applicant :2200 MISSION COLLEGE COULEVARD, M/S: RNB4-150, SANTA CLARA, CALIFORNIA 95052, UNITED STATES OF AMERICA.
(72)**Name of Inventor :**
1)NALLURI, HEMA, C.
2)DOYLE, PETER L.
3)BOLES, JEFFERY S.
4)CHANDRA, JOY

(57) Abstract :
Programmable predication logic in command streamer instruction execution is described. In one example, the invention includes a method that includes receiving batch buffer execution start command at a command streamer, the batch buffer containing executable instructions, determining whether predication has been enabled for the instructions using the start command, if predication has been enabled, then comparing a predication condition to values stored in a predication register, and if the condition is satisfied by the predication register values, then executing the batch buffer.

No. of Pages : 22 No. of Claims : 20

(12) PATENT APPLICATION PUBLICATION
(21) Application No.3863/DEL/2011 A
(19) INDIA
(22) Date of filing of Application :29/12/2011
(43) Publication Date : 05/07/2013

(54) Title of the invention : SIMPLIFICATION OF LOCAL CONTRAST COMPENSATION BY USING WEIGHTED LOOK-UP TABLE

(51) International classification :G23B
(31) Priority Document No :NA
(32) Priority Date :NA
(33) Name of priority country :NA
(86) International Application No :NA
Filing Date :NA
(87) International Publication No :NA
(61) Patent of Addition to Application Number :NA
Filing Date :NA
(62) Divisional to Application Number :NA
Filing Date :NA

(71)**Name of Applicant :**
1)INTEL CORPORATION
Address of Applicant :2200 MISSION COLLEGE BLVD., M/S: RNB4-150, SANTA CLARA, CALIFORNIA 95052, UNITED STATES OF AMERICA.
(72)**Name of Inventor :**
1)GUPTA, NIRAJ
2)PAL, SUPRATIM
3)CHAPPALLI, MAHESH B.
4)CHIU, YI-JEN
5)JIANG, HONG

(57) Abstract :
Systems, apparatus, articles, and methods are described including operations to generate a weighted look-up-table based at least in part on individual pixel input values within an active block region and on a plurality of contrast compensation functions. A second level compensation may be performed for a center pixel block of the active region based at least in part on the weighted look-up-table.

No. of Pages : 38 No. of Claims : 29

(12) PATENT APPLICATION PUBLICATION
(19) INDIA
(22) Date of filing of Application :30/12/2011
(21) Application No.3890/DEL/2011 A
(43) Publication Date : 05/07/2013

(54) Title of the invention : SYSTEM FOR THE DELIVERY OF A FLUID

(51) International classification :B23D
(31) Priority Document No :NA
(32) Priority Date :NA
(33) Name of priority country :NA
(86) International Application No :NA
Filing Date :NA
(87) International Publication No :NA
(61) Patent of Addition to Application Number :NA
Filing Date :NA
(62) Divisional to Application Number :NA
Filing Date :NA

(71)**Name of Applicant :**
1)CONTINENTAL AUTOMOTIVE GMBH
Address of Applicant :VAHRENWALDER STRAE 9,30165 HANNOVER, GERMANY
(72)**Name of Inventor :**
1)PETER, VOIGT
2)THOMAS, SCHMIDBAUER
3)RAMKUMAR VARATHARAJAN
4)SENTHIL KUMAR, SELVARAJ

(57) Abstract :
A System for the delivery of a fluid, comprises: - a high pressure pump (100), comprising -a pump body (101), - a piston (102), the piston being axially movable within the pump body (101) and comprising a first part (103) arranged within the pump body (101) and a second part (104) arranged outside the pump body (101), - wherein the pump body (101) is couplable with a combustion engine, such that the second part (104) of the piston (102) extends into the combustion engine, and wherein - the pump body (101) comprises one single fluid outlet (122), the system further comprising - a fluid distributor (123) directly connected with the pump body (102), the distrib¬utor comprising a fluid inlet (124), the fluid inlet (124) being coupled with the fluid outlet (122) of the pump (100), the distributor (123) further being provided with as many fluid outputs (105, 106, 107) as the combustion engine comprises cylinders, wherein - the distributor (123) is designed for coupling each fluid output (105, 106, 107) directly with an injector for the respective cylinder of the combustion engine via a pipe (108,109,110).

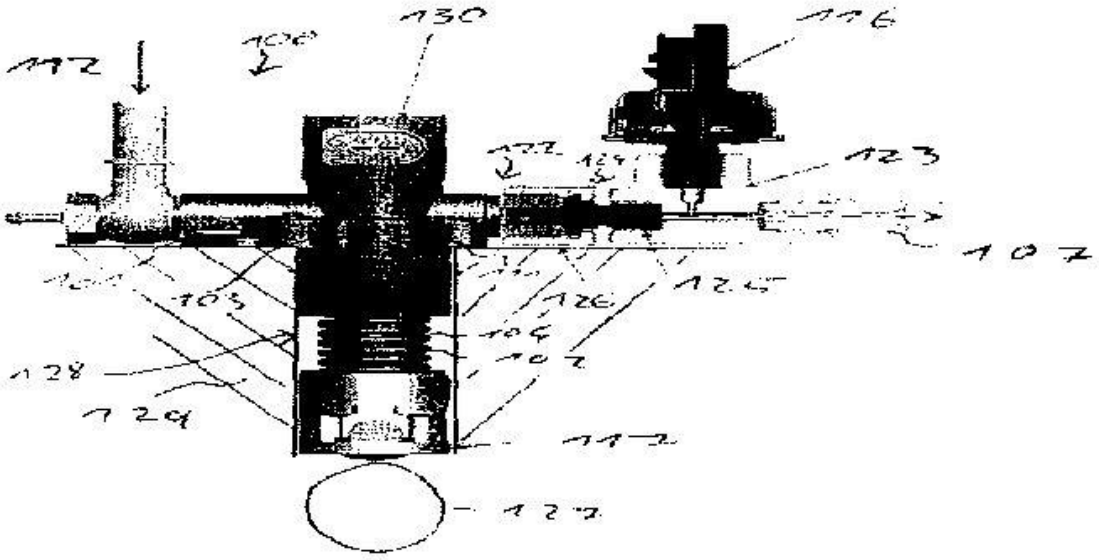

FIG: 1A

No. of Pages : 12 No. of Claims : 4

(12) PATENT APPLICATION PUBLICATION
(19) INDIA
(22) Date of filing of Application :30/12/2011
(21) Application No.3891/DEL/2011 A
(43) Publication Date : 05/07/2013

(54) Title of the invention : HIGH PRESSURE PUMP AND SYSTEM

(51) International classification :B23D
(31) Priority Document No :NA
(32) Priority Date :NA
(33) Name of priority country :NA
(86) International Application No :NA
Filing Date :NA
(87) International Publication No :NA
(61) Patent of Addition to Application Number :NA
Filing Date :NA
(62) Divisional to Application Number :NA
Filing Date :NA

(71)**Name of Applicant :**
1)CONTINENTAL AUTOMOTIVE GMBH
Address of Applicant :VAHRENWALDER STRAE 9, 30165 HANNOVER, GERMANY
(72)**Name of Inventor :**
1)PETER, VOIGT
2)THOMAS, SCHMIDBAUER
3)RAMKUMAR VARATHARAJAN
4)SENTHIL KUMAR, SELVARAJ

(57) Abstract :
A high pressure pump for the delivery of a fluid, comprises: -a pump body (101), - a piston (102), the piston being axially movable within the pump body (101) and comprising a first part (103) arranged within the pump body (101) and a second part (104) arranged outside the pump body (101), - wherein the pump body (101) is couplable with a combustion engine, such that the second part (104) of the piston (102) extends into the combustion engine, and wherein - the pump body (101) is provided with as many fluid outlets (105,106,107) as the combustion engine comprises cylinders, and - the pump is designed for coupling each fluid outlet (105, 106, 107) directly with an injector for the respective cylinder of the combustion engine via a pipe (108, 109,110). Fig. 4

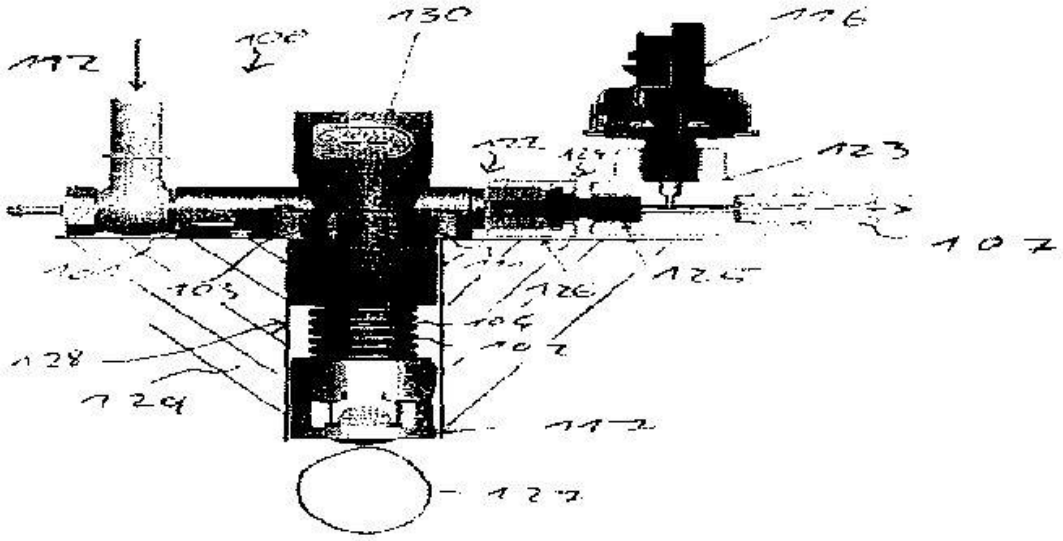

FIG: 1A

No. of Pages : 13 No. of Claims : 6

(12) PATENT APPLICATION PUBLICATION
(19) INDIA
(22) Date of filing of Application :30/12/2011
(21) Application No.3892/DEL/2011 A
(43) Publication Date : 05/07/2013

(54) Title of the invention : HIGH PRESSURE PUMP AND SYSTEM

(51) International classification :B23D
(31) Priority Document No :NA
(32) Priority Date :NA
(33) Name of priority country :NA
(86) International Application No :NA
Filing Date :NA
(87) International Publication No :NA
(61) Patent of Addition to Application Number :NA
Filing Date :NA
(62) Divisional to Application Number :NA
Filing Date :NA

(71)**Name of Applicant :**
1)CONTINENTAL AUTOMOTIVE GMBH
Address of Applicant :VAHRENWALDER STRAE 9, 30165 HANNOVER, GERMANY
(72)**Name of Inventor :**
1)PETER, VOIGT
2)THOMAS, SCHMIDBAUER
3)RAMKUMAR VARATHARAJAN
4)SENTHIL KUMAR, SELVARAJ

(57) Abstract :
A high pressure pump for the delivery of a fluid, comprises: - a pump body (101), - a piston (102), the piston being axially movable within the pump body (101) and comprising a first part (103) arranged within the pump body (101) and a second part 104) arranged outside the pump body (101), - comprising a coupling sleeve (118) for coupling the pump with a combustion engine such that the coupling sleeve (118) extends into the combustion engine, the coupling sleeve (118) surrounding a tappet chamber (121), - the coupling sleeve (118) being coupled with the pump body (101) such that the second part (104) of the piston (102) is arranged in the tappet chamber (121), and wherein - the pump body (101) is provided with as many fluid outputs (105, 106, 107) as the combustion engine comprises cylinders, and - the pump is designed for coupling each fluid output (105, 106, 107) directly with injector for the respective cylinder of the combustion engine via a pipe (108, 109, 110). Fig. 1A

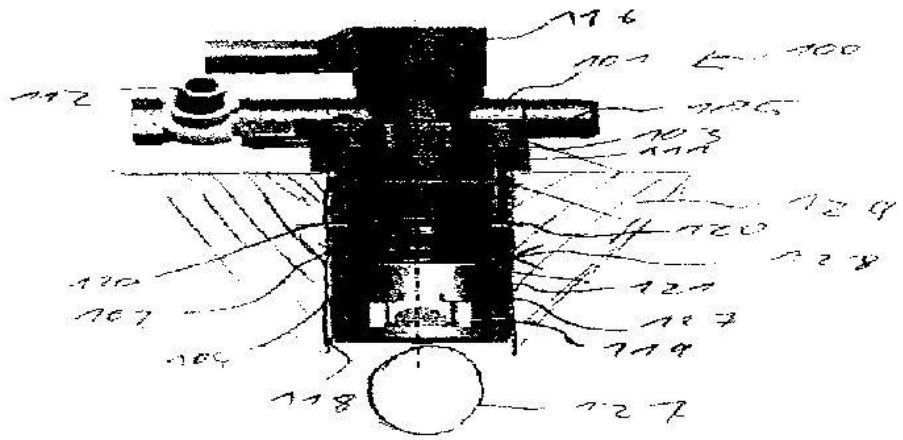

FIG: 1A

No. of Pages : 13 No. of Claims : 10

(12) PATENT APPLICATION PUBLICATION
(19) INDIA
(22) Date of filing of Application :28/12/2011
(21) Application No.3850/DEL/2011 A
(43) Publication Date : 05/07/2013

(54) Title of the invention : ALLIUM FISTULOSUM LEAF AGGLUTININ RECOMBINANT PROTEIN, ITS ENCODING POLYNUCLEOTIDE, PRIMER AND PROCESS FOR PREPARATION THEREOF

(51) International classification :C07C
(31) Priority Document No :NA
(32) Priority Date :NA
(33) Name of priority country :NA
(86) International Application No :NA
Filing Date :NA
(87) International Publication No :NA
(61) Patent of Addition to Application Number :NA
Filing Date :NA
(62) Divisional to Application Number :NA
Filing Date :NA

(71)**Name of Applicant :**
1)COUNCIL OF SCIENTIFIC & INDUSTRIAL RESEARCH
Address of Applicant :ANUSANDHAN BHAWAN, RAFI MARG, NEW DELHI - 110001, INDIA.
(72)**Name of Inventor :**
1)SINGH PRADHYUMNA KUMAR
2)RAI PREETI
3)SINGH RAHUL
4)UPADHYAY SANTOSH KUMAR
5)SAURABH SHARAD
6)SINGH HARPAL
7)VERMA PRAVEEN CHANDRA
8)KRISHNAPPA CHANDRASHEKAR
9)TULI RAKESH

(57) Abstract :
Allium fistulosum leaf agglutinin (AFAL) recombinant protein, its encoding nucleotides, primers and the process of preparation thereof: Nucleic acid sequence encoding Allium fistulosum leaf agglutinin (AFAL) is disclosed. The invention provides Allium fistulosum leaf agglutinin (AFAL) recombinant protein, its encoding nucleotides, primers and the process of preparation thereof, said recombinant protein is useful for insect control and haemagglutination activity. AFAL is found more toxic to sap sucking insect pest Aphis gossypii (cotton aphid) and Bemisia tabaci (whiteflies) as compared to known Allium sativum leaf agglutinin. AFAL can be used in the development of transgenic plants for resistance against sap sucking and chewing pests.

No. of Pages : 25 No. of Claims : 12

(12) PATENT APPLICATION PUBLICATION
(19) INDIA
(22) Date of filing of Application :28/12/2011
(21) Application No.3851/DEL/2011 A
(43) Publication Date : 05/07/2013

(54) Title of the invention : A PROCESS FOR PREPARATION OF A NOVEL INSECTICIDAL CHITINASE TOXIC AGAINST WHITEFLIES, ITS ENCODING NUCLEOTIDES AND APPLICATION THEREOF.

(51) International classification :B23K
(31) Priority Document No :NA
(32) Priority Date :NA
(33) Name of priority country :NA
(86) International Application No :NA
Filing Date :NA
(87) International Publication No :NA
(61) Patent of Addition to Application Number :NA
Filing Date :NA
(62) Divisional to Application Number :NA
Filing Date :NA

(71)**Name of Applicant :**
1)COUNCIL OF SCIENTIFIC & INDUSTRIAL RESEARCH
Address of Applicant :ANUSANDHAN BHAWAN, RAFI MARG, NEW DELHI - 110001, INDIA. Delhi India
(72)**Name of Inventor :**
1)SINGH PRADHYUMNA KUMAR
2)UPADHYAY SANTOSH KUMAR
3)KRISHNAPPA CHANDRASHEKAR
4)SAURABH SHARAD
5)SINGH RAHUL
6)NA
7)RAI PREETI
8)SINGH HARPAL
9)MISHRA MANISHA
10)SINGH AJIT PRATAP
11)VERMA PRAVEEN CHANDRA
12)NAIR KUTTAN PILLAI NARAYANAN
13)TULI RAKESH

(57) Abstract :
The present invention provides a process for preparation of an insecticidal protein isolated from the fern Tectaria and DNA sequence encoding the said protein. Insecticidal protein was purified from the leaves; insecticidal activity was guiding factor in the purification of the bioactive protein which subsequently has been prepared by recombinant DNA technique. The purified protein was approximately 21 kDa. Toxin encoding gene was 651 nucleotides long, which encoded a precursor protein of 216 amino acid residues. Mature protein was 192 amino acid residues long with molecular weight 21.27 kDa. The said protein was a Chitinase with exo- and endo-chitinase activity having chitin binding module (CtBM) only. Bio-active protein is an insecticidal protein, toxic to insect pests, particularly whitefly (Bemisia tabaci). The nucleotide sequence encoding the insecticidal protein is useful to produce transgenic crop plants and its expression in vascular tissues to give protection against attack of whiteflies.

No. of Pages : 29 No. of Claims : 8

(12) PATENT APPLICATION PUBLICATION
(21) Application No.3852/DEL/2011 A
(19) INDIA
(22) Date of filing of Application :28/12/2011
(43) Publication Date : 05/07/2013

(54) Title of the invention : METHOD AND APPARATUS FOR FORMING A DISTAL TIP ON AN INTRAVENOUS TUBULAR CATHETER

(51) International classification :C07C
(31) Priority Document No :NA
(32) Priority Date :NA
(33) Name of priority country :NA
(86) International Application No :NA
Filing Date :NA
(87) International Publication No :NA
(61) Patent of Addition to Application Number :NA
Filing Date :NA
(62) Divisional to Application Number :NA
Filing Date :NA

(71)**Name of Applicant :**
1)POLY MEDICURE LIMITED
Address of Applicant :PLOT NO. 105, SECTOR 59, HSIIDC INDUSTRIAL AREA, FARIDABAD, HARYANA - 121004, INDIA, Haryana India
(72)**Name of Inventor :**
1)BAID, RISHI

(57) Abstract :
The present invention relates to a method and apparatus for forming catheter products for IV catheter assembly. More particularly, the present invention relates to a method and apparatus for continuously forming distal tips on intravenous tubular catheters with a uniform taper and a low tip entry profile.

No. of Pages : 23 No. of Claims : 11

(12) PATENT APPLICATION PUBLICATION
(21) Application No.3875/DEL/2011 A
(19) INDIA
(22) Date of filing of Application :30/12/2011
(43) Publication Date : 05/07/2013

(54) Title of the invention : AN ANAEROBIC DIGESTION BASED INTERGRATED BIOGAS GENERATION SYSTEM METHOD OF WORKING FOR SAME

(51) International classification :B23B
(31) Priority Document No :NA
(32) Priority Date :NA
(33) Name of priority country :NA
(86) International Application No :NA
Filing Date :NA
(87) International Publication No :NA
(61) Patent of Addition to Application Number :NA
Filing Date :NA
(62) Divisional to Application Number :NA
Filing Date :NA

(71)**Name of Applicant :**
1)THE ENERGY AND RESOURCES INSTITUTE (TERI)
Address of Applicant :DARBARI SETH BLOCK, IHC COMPLEX, LODHI ROAD, NEW DELHI 110003 Delhi India
(72)**Name of Inventor :**
1)MR. DINESH CHANDER PANT
2)MR.DILIP K SHARMA
3)DR. V V N KISHORE

(57) Abstract :
The present invention relates generally to the field of energy sector and is in particular directed towards an integrated biogas generation system that is based on the anaerobic digestion of the biodegradable waste materials. The invention more particularly focuses on developing a cost-effective, environment friendly, and easy to use technology that works on the principle of anaerobic digestion of a multitude of biodegradable waste materials so as to generate biogas, thereby having the potential to also provide a viable biofuel.

No. of Pages : 23 No. of Claims : 18

(12) PATENT APPLICATION PUBLICATION
(21) Application No.3878/DEL/2011 A
(19) INDIA
(22) Date of filing of Application :30/12/2011
(43) Publication Date : 05/07/2013

(54) Title of the invention : APPARATUS, METHOD, AND SYSTEM FOR ACCURATE ESTIMATION OF TOTAL ENERGY EXPENDITURE IN DAILY ACTIVITIES

(51) International classification :B23B
(31) Priority Document No :NA
(32) Priority Date :NA
(33) Name of priority country :NA
(86) International Application No :NA
Filing Date :NA
(87) International Publication No :NA
(61) Patent of Addition to Application Number :NA
Filing Date :NA
(62) Divisional to Application Number :NA
Filing Date :NA

(71)**Name of Applicant :**
1)INTEL CORPORATION
Address of Applicant :2200 MISSION COLLEGE, BOULEVARD, SANTA CLARA, CALIFORNIA 95052, UNITED STATES OF AMERICA;
(72)**Name of Inventor :**
1)BAXI, AMIT S.

(57) Abstract :
An apparatus, article, and system, the apparatus including a housing, a 3-axis accelerometer contained in the housing, a medium storing program instructions, and a processor to execute the program instructions stored in the memory to receive a signal from the 3-axis accelerometer indicative of a user's activities, extract features from the received signals, classify the extracted features into a plurality of activity types, determine a total energy expenditure based on the classification of the extracted features; and provide a report of the total energy expenditure.

No. of Pages : 19 No. of Claims : 18

(12) PATENT APPLICATION PUBLICATION
(19) INDIA
(22) Date of filing of Application :30/12/2011
(21) Application No.3884/DEL/2011 A
(43) Publication Date : 05/07/2013

(54) Title of the invention : METHODS AND APPARATUS FOR APPLYING LUBRICIOUS COATING OF MEDICAL DEVICES

(51) International classification :B23B
(31) Priority Document No :NA
(32) Priority Date :NA
(33) Name of priority country :NA
(86) International Application No :NA
Filing Date :NA
(87) International Publication No :NA
(61) Patent of Addition to Application Number :NA
Filing Date :NA
(62) Divisional to Application Number :NA
Filing Date :NA

(71)**Name of Applicant :**
1)POLY MEDICURE LIMITED
Address of Applicant :PLOT NO. 105, SECTOR 59, HSIIDC INDUSTRIAL AREA, FARIDABAD, HARYANA - 121004, INDIA
(72)**Name of Inventor :**
1)BAID, RISHI

(57) Abstract :
This invention relates to the coating of medical devices. More particularly, the present invention relates to methods and apparatus for applying lubricious coating to medical devices such as over-the-needle peripheral venous catheters and the like.

No. of Pages : 20 No. of Claims : 12

(12) PATENT APPLICATION PUBLICATION
(21) Application No.3885/DEL/2011 A
(19) INDIA
(22) Date of filing of Application :30/12/2011
(43) Publication Date : 05/07/2013

(54) Title of the invention : SYSTEMS AND METHODS FOR MANAGING QUALITY OF SERVICE

(51) International classification :B23D
(31) Priority Document No :NA
(32) Priority Date :NA
(33) Name of priority country :NA
(86) International Application No :NA
Filing Date :NA
(87) International Publication No :NA
(61) Patent of Addition to Application Number :NA
Filing Date :NA
(62) Divisional to Application Number :NA
Filing Date :NA

(71)**Name of Applicant :**
1)SANDVINE INCORPORATED ULC
Address of Applicant :408 ALBERT STREET, WATERLOO, ON, N2L 3V3
(72)**Name of Inventor :**
1)SARKAR, NILANJAN
2)HADDAD, BENY

(57) Abstract :
A method for managing quality of service (QoS) consists of receiving a packet and identifying at least one application level characteristic of the packet. The method for managing QoS further consists of modifying quality of service parameters of the packet based on the application level characteristic and sending the packet to a destination with modified quality of service parameters. A system for managing QoS includes modules such as a bearer module adapted to review and retrieve data from a packet and a payload packet inspector module adapted to identify at least one application level characteristic of the packet. The system for managing QoS further has a policy enforcement module designed to modify quality of service parameters of the packet based in part on the retrieved data and the at least one application level characteristic.

No. of Pages : 38 No. of Claims : 18

(12) PATENT APPLICATION PUBLICATION
(19) INDIA
(22) Date of filing of Application :30/12/2011
(21) Application No.3888/DEL/2011 A
(43) Publication Date : 05/07/2013

(54) Title of the invention : BUS BARS FOR SOLAR MODULES

(51) International classification :B23D
(31) Priority Document No :NA
(32) Priority Date :NA
(33) Name of priority country :NA
(86) International Application No :NA
Filing Date :NA
(87) International Publication No :NA
(61) Patent of Addition to Application Number :NA
Filing Date :NA
(62) Divisional to Application Number :NA
Filing Date :NA

(71)**Name of Applicant :**
1)MEMC SINGAPORE PTE, LTD.
Address of Applicant :8 CROSS STREET #11-00, PWC BUILDING, SINGAPORE 048424, SINGAPORE
(72)**Name of Inventor :**
1)SANDEEP RAMMOHAN KOPPIKAR
2)VIKRANT ASHOK CHAUDHARI
3)PARESH SURESH NASIKKAR
4)JEAN PASCAL POSBIC

(57) Abstract :
A solar module includes a photovoltaic cell having a front surface and a rear surface. The photovoltaic cell is configured for converting light into electricity. Fingers are disposed on the front surface of the cell and are electrically connected to the cell to conduct electricity generated by the cell. The fingers are spaced apart from each other by gaps. A bus bar is disposed on the front surface of the cell and connected to at least the fingers to conduct electricity from the fingers. The bus bar is configured to facilitate the transfer of heat generated during soldering of a conductor to the bus bar away from locations of the soldering.

No. of Pages : 26 No. of Claims : 22

(12) PATENT APPLICATION PUBLICATION
(21) Application No.10/DEL/2012 A
(19) INDIA
(22) Date of filing of Application :03/01/2012
(43) Publication Date : 05/07/2013

(54) Title of the invention : A BIOINOCULANT COMPOSITION COMPRISING TRICHODERMA PROTOPLAST FUSANT USEFUL FOR ENHANCING NUTRITIONAL VALUE AND GROWTH OF PLANTS

(51) International classification :C12N
(31) Priority Document No :NA
(32) Priority Date :NA
(33) Name of priority country :NA
(86) International Application No :NA
Filing Date :NA
(87) International Publication No :NA
(61) Patent of Addition to Application Number :NA
Filing Date :NA
(62) Divisional to Application Number :NA
Filing Date :NA

(71)**Name of Applicant :**
1)COUNCIL OF SCIENTIFIC & INDUSTRIAL RESEARCH
Address of Applicant :ANUSANDHAN BHAWAN, RAFI MARG, NEW DELHI-110 001, INDIA. Delhi India
(72)**Name of Inventor :**
1)MISHRA ARADHANA
2)NAUTIYAL CHANDRA SHEKHAR

(57) Abstract :
The present invention relates to a composition useful as bioinoculant, wherein the said composition comprising fungal strain of Trichoderma having an accession number MTCC 5659 optionally along with a carrier. The claimed composition is useful for stimulating the content of amino acids in plants, the content of trace elements, the chlorophyll content and plant growth and yield attributing characters.

No. of Pages : 20 No. of Claims : 7

(12) PATENT APPLICATION PUBLICATION
(19) INDIA
(22) Date of filing of Application :03/01/2012
(21) Application No.13/DEL/2012 A
(43) Publication Date : 05/07/2013

(54) Title of the invention : A THRESHER CUM WINNOWER DEVICE

(51) International classification :B23B
(31) Priority Document No :NA
(32) Priority Date :NA
(33) Name of priority country :NA
(86) International Application No :NA
Filing Date :NA
(87) International Publication No :NA
(61) Patent of Addition to Application Number :NA
Filing Date :NA
(62) Divisional to Application Number :NA
Filing Date :NA

(71)**Name of Applicant :**
1)COUNCIL OF SCIENTIFIC & INDUSTRIAL RESEARCH
Address of Applicant :ANUSANDHAN BHAWAN, RAFI MARG, NEW DELHI - 110 001, INDIA. Delhi India
(72)**Name of Inventor :**
1)RAMASAMY KAILAPPAN
2)PERIASAMY SUGANYA

(57) Abstract :
The present invention provides a thresher cum winnower device for glory lily, which consists of a feed hopper, threshing chamber, husk outlet, blower, bean outlet chute and an electric motor mounted over a suitable metal frame. The thresher cum winnower is used for the threshing the glory lily pods and separating the beans from the husk. The threshing cylinder present in the threshing chamber is operated at a peripheral speed of 6.5 m/s, with a clearance of 30mm between the tip of the pegs present in the threshing cylinder and the concave solid cover to thresh the pods and free the beans from the husk; operating the blower at an air velocity of 7.5 m/s to lift the broken husks coming along with the beans through the concave solid cover after threshing and achieve the cleaning operation. The above said operating parameters were optimized for a feed rate of 250 ±10 kg of pods/h. with the above said operating conditions of the thresher cum winnower recorded a threshing efficiency of 99.81 per cent, winnowing efficiency of 99.92 per cent, bean damage of 0.03 per cent and bean loss of 0.275 percent.

No. of Pages : 34 No. of Claims : 16

(12) PATENT APPLICATION PUBLICATION
(21) Application No.3854/DEL/2011 A
(19) INDIA
(22) Date of filing of Application :28/12/2011
(43) Publication Date : 05/07/2013

(54) Title of the invention : A NOBEL HERBAL EXTRACT OF JASMINUM HUMILE AND ITS THERAPEUTICALLY USES IN ANTI DIABETIC AND ANTIOXIDANT

(51) International classification :A61K
(31) Priority Document No :NA
(32) Priority Date :NA
(33) Name of priority country :NA
(86) International Application No :NA
Filing Date :NA
(87) International Publication No :NA
(61) Patent of Addition to Application Number :NA
Filing Date :NA
(62) Divisional to Application Number :NA
Filing Date :NA

(71)**Name of Applicant :**
1)PARMINDER NAIN
Address of Applicant :ASSOCIATE PROFESSOR, MMCP, M.M. UNIVERSITY, MULLANA-AMBALA-133207 (HARYANA) Haryana India
2)VIPIN SAINI
3)SUNIL SHARMA
4)JASPREET NAIN
(72)**Name of Inventor :**
1)PARMINDER NAIN
2)VIPIN SAINI
3)SUNIL SHARMA
4)JASPREET NAIN

(57) Abstract :
Jasminum humile commonly known as yellow jasmine or pili chameli is a medicinal plant, used in Ayurveda for treating various diseases, one of which is diabetes mellitus. In present study, we evaluated the Antidiabetic and antioxidant property of Jasminum humile leaves extract.

No. of Pages : 16 No. of Claims : 7

(12) PATENT APPLICATION PUBLICATION
(19) INDIA
(22) Date of filing of Application :28/12/2011
(21) Application No.3857/DEL/2011 A
(43) Publication Date : 05/07/2013

(54) Title of the invention : A Novel Composition Having Optimum Nano-Aluminium Content in Composite Propellant Formulation

(51) International classification :C06B
(31) Priority Document No :NA
(32) Priority Date :NA
(33) Name of priority country :NA
(86) International Application No :NA
Filing Date :NA
(87) International Publication No : NA
(61) Patent of Addition to Application Number :NA
Filing Date :NA
(62) Divisional to Application Number :NA
Filing Date :NA

(71)**Name of Applicant :**
1)Director General Defence Research & Development Organization
Address of Applicant :Ministry of Defence Government of India Room No. 348 B-Wing DRDO Bhavan Rajaji Marg New Delhi:- 110 011 India.
(72)**Name of Inventor :**
1)Anjali Kumari
2)Ramesh Kurva
3)Mehilal
4)Praveen Prakash Singh
5)Bikash Bhattacharya

(57) Abstract :
The present invention provides a novel composite propellant formulation composition comprising: a metallic fuel as nano-aluminium powder in the range of 15-20% by weight a polymeric binder as hydroxyl terminated polybutadiene (HTPB) In the range of 10-12% by weight a plasticizer as Dioctyl adipate (DOA) is in the range of 3-5% by weight an oxidizer as ammonium perchlorate is in the range of 65-70% by weight a bonding agent and an antioxidant and a bi-curative based on toluene diisocyanate(TDI) & isophorone diisocyanate (IPDI)

No. of Pages : 14 No. of Claims : 10

(12) PATENT APPLICATION PUBLICATION
(19) INDIA
(22) Date of filing of Application :29/12/2011
(21) Application No.3859/DEL/2011 A
(43) Publication Date : 05/07/2013

(54) Title of the invention : METHOD AND APPARATUS FOR SILICONIZATION OF A SURGICAL NEEDLE

(51) International classification :A61M
(31) Priority Document No :NA
(32) Priority Date :NA
(33) Name of priority country :NA
(86) International Application No :NA
Filing Date :NA
(87) International Publication No :NA
(61) Patent of Addition to Application Number :NA
Filing Date :NA
(62) Divisional to Application Number :NA
Filing Date :NA

(71)**Name of Applicant :**
1)POLY MEDICURE LIMITED
Address of Applicant :OF PLOT NO. 105, SECTOR 59, HSIIDC INDUSTRIAL AREA, FARIDABAD, HARYANA-121004, INDIA
(72)**Name of Inventor :**
1)BAID, RISHI

(57) Abstract :
This invention relates to a surgical needle. More particularly, the present invention relates to a method and apparatus for siliconization of a surgical needle possessing a silicone resin coating providing reduced tissue penetration force.

No. of Pages : 22 No. of Claims : 11

(12) PATENT APPLICATION PUBLICATION
(19) INDIA
(22) Date of filing of Application :02/01/2012
(21) Application No.7/DEL/2012 A
(43) Publication Date : 05/07/2013

(54) Title of the invention : STAR POLYMER AND LUBRICATING COMPOSITION THEREOF

(51) International classification :C08B
(31) Priority Document No :NA
(32) Priority Date :NA
(33) Name of priority country :NA
(86) International Application No :NA
Filing Date :NA
(87) International Publication No :NA
(61) Patent of Addition to Application Number :NA
Filing Date :NA
(62) Divisional to Application Number :NA
Filing Date :NA

(71)**Name of Applicant :**
1)THE LUBRIZOL CORPORATION
Address of Applicant :29400 LAKELAND BOULEVARD, WICKLIFFE, OHIO 44092-2298, UNITED STATES OF AMERICA
(72)**Name of Inventor :**
1)HAIHU QIN
2)MARINA BAUM
3)JOHN R. JOHNSON

(57) Abstract :
The present invention relates to a lubricating composition containing an oil of lubricating viscosity and a star polymer that has at least two inner blocks, at least one of which is in turn bonded to one or more outer blocks. The invention further relates to methods of lubricating a mechanical device with the lubricating composition.

No. of Pages : 41 No. of Claims : 19

(12) PATENT APPLICATION PUBLICATION
(21) Application No.14/DEL/2012 A
(19) INDIA
(22) Date of filing of Application :03/01/2012
(43) Publication Date : 05/07/2013

(54) Title of the invention : N-(3-((DIETHYLAMINO)METHYL)-4-HYDROXYPHENYL)-N-(QUINOLIN-4-YL) SULFONAMIDES FOR TREATMENT OF TUBERCULOSIS AND PROCESS OF PREPARATION THEREOF

(51) International classification :C07C
(31) Priority Document No :NA
(32) Priority Date :NA
(33) Name of priority country :NA
(86) International Application No :NA
Filing Date :NA
(87) International Publication No :NA
(61) Patent of Addition to Application Number :NA
Filing Date :NA
(62) Divisional to Application Number :NA
Filing Date :NA

(71)**Name of Applicant :**
1)COUNCIL OF SCIENTIFIC & INDUSTRIAL RESEARCH
Address of Applicant :ANUSANDHAN BHAWAN, RAFI MARG, NEW DELHI -110001, INDIA Delhi India
(72)**Name of Inventor :**
1)SINGH, SUPRIYA
2)ROY, KULDEEP KUMAR
3)KHAN, SHAHEB RAJ
4)KASHYAP, VIVEK KUMAR
5)KRISHNAN, MANJU YASODA
6)CHATURVEDI, VINITA
7)SINHA, SUDHIR
8)SRIVASTAVA, RANJANA
9)SAXENA, ANIL KUMAR
10)SHARMA, SANDEEP KUMAR

(57) Abstract :
The present invention relates to novel N-(3-((diethylamino)methyl)-4-hydroxyphenyl)-N-(quinolin-4-yl)sulfonamide derivatives, their preparation, to pharmaceutical compositions comprising them, and to their use as therapeutic agents, particularly in the prevention or treatment of tuberculosis. The present invention particularly relates to compounds of formula A: Formula A wherein: R = methyl, (or) R = a group of the structure wherein, R1, R2, and R3 may be same or different present at any positions) and are groups selected from the group consisting of hydrogen, halogen, alkyl (C1-C3), nitro, cyano, trifluoromethyl, (or) R is a group of the structure wherein X may be CH or N, and the attachment point of sulfonyl may be at the position 1 or 2, (or) R is a group of the structure Where R1 is hydrogen or halogen, (or) R is a group of the structure

No. of Pages : 40 No. of Claims : 14

(12) PATENT APPLICATION PUBLICATION
(19) INDIA
(22) Date of filing of Application :30/12/2011
(21) Application No.3879/DEL/2011 A
(43) Publication Date : 05/07/2013

(54) Title of the invention : METHOD AND APPARATUS FOR MEASURING MULTIPLE ECG LEADS USING A DEVICE WITH EMBEDDED LEADS

(51) International classification :B23B
(31) Priority Document No :NA
(32) Priority Date :NA
(33) Name of priority country :NA
(86) International Application No :NA
Filing Date :NA
(87) International Publication No :NA
(61) Patent of Addition to Application Number :NA
Filing Date :NA
(62) Divisional to Application Number :NA
Filing Date :NA

(71)**Name of Applicant :**
1)INTEL CORPORATION
Address of Applicant :2200 MISSION COLLEGE, BOULEVARD, SANTA CLARA, CALIFORNIA 95052, UNITED STATES OF AMERICA;
(72)**Name of Inventor :**
1)BAXI, AMIT S.
2)R, RAGHAVENDRA RAGHU

(57) Abstract :
An apparatus and a method, the apparatus including a housing, an electrocardiogram (ECG) measuring circuit contained in the housing, and three electrodes embedded in the housing, electrically connected to the ECG measuring circuit, and in spaced apart configuration from each other.

No. of Pages : 17 No. of Claims : 14

(12) PATENT APPLICATION PUBLICATION
(21) Application No.3880/DEL/2011 A
(19) INDIA
(22) Date of filing of Application :30/12/2011
(43) Publication Date : 05/07/2013

(54) Title of the invention : RUNNER SYSTEM WITH INCREASED DIAMETER FOR INJECTION MOLDING MACHINE

(51) International classification :B23B
(31) Priority Document No :NA
(32) Priority Date :NA
(33) Name of priority country :NA
(86) International Application No :NA
Filing Date :NA
(87) International Publication No :na
(61) Patent of Addition to Application Number :NA
Filing Date :NA
(62) Divisional to Application Number :NA
Filing Date :NA

(71)**Name of Applicant :**
1)MR. ABHINAV CHAUHAN KUNSTOCOM INDIA LIMITED
Address of Applicant :KUNSTOCOM INDIA LIMITED, E-27, DEFENCE COLONY, NEW DELHI, INDIA, 110024 Delhi India
(72)**Name of Inventor :**
1) ABHINAV CHAUHAN

(57) Abstract :
The present invention relates to an improved structure of a runner system for use in injecting a melted polymeric material into a mold cavity. The inner diameter of the runner system is increased and coated with a ceramic material that minimizes the resistance in the material flow path and also allows the molten material within the runner system to remain molten between molding cycles.

No. of Pages : 8 No. of Claims : 5

(12) PATENT APPLICATION PUBLICATION
(21) Application No.3881/DEL/2011 A
(19) INDIA
(22) Date of filing of Application :30/12/2011
(43) Publication Date : 05/07/2013

(54) Title of the invention : HERBAL NAIL POLISH

(51) International classification :A61K
(31) Priority Document No :NA
(32) Priority Date :NA
(33) Name of priority country :NA
(86) International Application No :NA
Filing Date :NA
(87) International Publication No :NA
(61) Patent of Addition to Application Number :NA
Filing Date :NA
(62) Divisional to Application Number :NA
Filing Date :NA

(71)**Name of Applicant :**
1)AMITY UNIVERSITY
Address of Applicant :AMITY UNIVERSITY CAMPUS SECTOR-125, NOIDA - 201303, UP, INDIA. Uttar Pradesh India
(72)**Name of Inventor :**
1)MANISH KANT PANT
2)HARSHA KHARKWAL
3)DEVI DATT JOSHI

(57) Abstract :
The present invention relates to an herbal nail polish made from the pigments of Lal Shimla Mirch (red bell pepper) and glycosides of Mulberry leaves to be applied on human nails as a coating and allowed to dry, leaving a film of solid material on the nails, generally for cosmetic purposes and having healing and protective properties. The composition of the present invention is designed to be used daily over a period of weeks to produce the same or a superior result as compared to a superficial or light chemical nail polish available in the market.

No. of Pages : 9 No. of Claims : 8

(12) PATENT APPLICATION PUBLICATION
(19) INDIA
(22) Date of filing of Application :03/01/2012

(21) Application No.11/DEL/2012 A
(43) Publication Date : 05/07/2013

(54) Title of the invention : CU-MEDIATED ANNULATION FOR THE EFFECTIVE SYNTHESIS OF 3-SUBSTITUTED PHTHALIDES

(51) International classification :C07C
(31) Priority Document No :NA
(32) Priority Date :NA
(33) Name of priority country :NA
(86) International Application No :NA
Filing Date :NA
(87) International Publication No :NA
(61) Patent of Addition to Application Number :NA
Filing Date :NA
(62) Divisional to Application Number :NA
Filing Date :NA

(71)**Name of Applicant :**
1)COUNCIL OF SCIENTIFIC & INDUSTRIAL RESEARCH
Address of Applicant :ANUSANDHAN BHAWAN, RAFI MARG, NEW DELHI - 110001, INDIA Delhi India
(72)**Name of Inventor :**
1)REDDY SANTHOSH REKULA
2)PRAGATI KISHORE PRASAD
3)KIRAN CHAITHANYA INDUKURU NAGA
4)ARUMUGAM SUDALAI

(57) Abstract :
The present invention relates to novel commercially feasible one pot synthesis of library of 3-substituted phthalides of formula I via CuCN mediated oxidative cyclization in high yield. Formula I

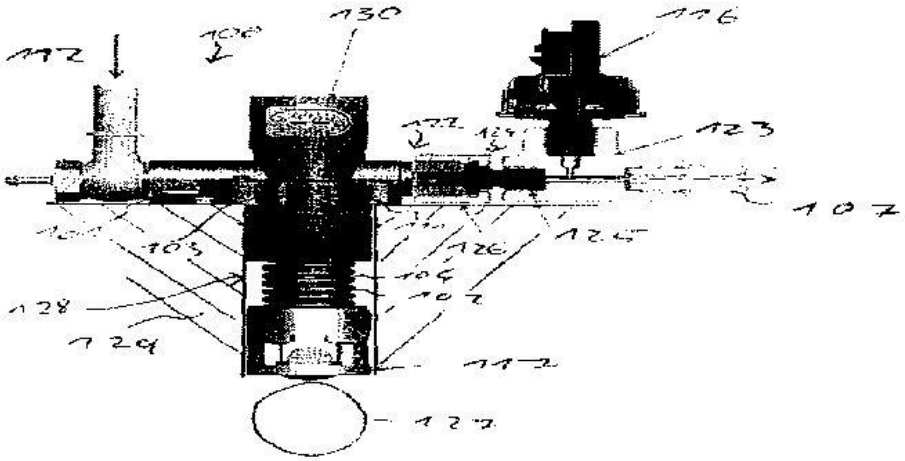

FIG: 1A

No. of Pages : 29 No. of Claims : 9

(12) PATENT APPLICATION PUBLICATION
(21) Application No.3844/DEL/2011 A
(19) INDIA
(22) Date of filing of Application :28/12/2011
(43) Publication Date : 05/07/2013

(54) Title of the invention : A PROCESS AND A MULTI PISTON HOT PRESS FOR PRODUCING POWDER METALLURGY COMPONENTS, SUCH AS CERAMETALLIC FRICTION COMPOSITES

(51) International classification :B03C
(31) Priority Document No :NA
(32) Priority Date :NA
(33) Name of priority country :NA
(86) International Application No :NA
Filing Date :NA
(87) International Publication No :NA
(61) Patent of Addition to Application Number :NA
Filing Date :NA
(62) Divisional to Application Number :NA
Filing Date :NA

(71)**Name of Applicant :**
1)INTERNATIONAL ADVANCED RESEARCH CENTER FOR POWER METALLURGY AND NEW MATERIALS (ARCI), DEPARTMENT OF SCIENCE AND TECHNOLOGY, GOVT. OF INDIA
Address of Applicant :PLOT NO. 102, INSTITUTIONAL AREA SECTOR-44, GURGAON-122003 HAYANA India
(72)**Name of Inventor :**
1)MALOBIKA KARANJAI
2)AYYAGARI SIVAKUMAR

(57) Abstract :
The present invention provides an improved process and a novel Multi Piston Hot Press (MPHP), the improved process tailored for production of Iron-based Powder Metallurgy (PM) cerametallic composites, including friction-producing composites like automotive clutch buttons and brake pads, specifically, cerametallic clutch cookies, which, with the limitation of not being bonded to any supporting back plate, required the present improved process and, for their mass production through pressure sintering, required the MPHP, specifically designed, overcoming the limitations of the existing pressure sintering furnaces, the MPHP including a plurality of hydraulic pistons for applying predefined pressure on a plurality of stacks, built from green-composites, during their sintering in a leak-proof muffle, the thermal energy for pressure sintering being provided by and a pair of semicircular movable electrical-heating hoods which can be closed around the muffle during pressure sintering and separated for cooling and unloading the iron based cerametallic clutch cookies/buttons.

No. of Pages : 39 No. of Claims : 19

(12) PATENT APPLICATION PUBLICATION
(21) Application No.3846/DEL/2011 A
(19) INDIA
(22) Date of filing of Application :28/12/2011
(43) Publication Date : 05/07/2013

(54) Title of the invention : APPARATUS AND METHOD FOR AUTOMATICALLY CONTROLLING DISPLAY SCREEN DENSITY

(51) International classification :G01N
(31) Priority Document No :NA
(32) Priority Date :NA
(33) Name of priority country :NA
(86) International Application No :NA
Filing Date :NA
(87) International Publication No :NA
(61) Patent of Addition to Application Number :NA
Filing Date :NA
(62) Divisional to Application Number :NA
Filing Date :NA

(71)**Name of Applicant :**
1)INTEL CORPORATION
Address of Applicant :2200 MISSION COLLEGE BLVD., SANTA CLARA, CA 95052, UNITED STATES OF AMERICA
(72)**Name of Inventor :**
1)THOMAS, VISHAL

(57) Abstract :
An apparatus for controlling a screen includes a storage area, an analyzer, and a controller. The storage area stores information indicative of one or more screen usage attributes. The analyzer determines a pattern of usage based on the stored information. The controller automatically changes a density of the screen from a first density to a second density based on the pattern of usage determined by the analyzer. The change to the second density produces a change in a size of one or more items displayed on the screen.

No. of Pages : 32 No. of Claims : 30

(12) PATENT APPLICATION PUBLICATION
(19) INDIA
(22) Date of filing of Application :06/05/2011
(21) Application No.1322/DEL/2011 A
(43) Publication Date : 05/07/2013

(54) Title of the invention : EFFERVESCENT FORMULATION COMPRISING TRAMADOL AND ACETAMINOPHEN

(51) International classification :C07C
(31) Priority Document No :NA
(32) Priority Date :NA
(33) Name of priority country :NA
(86) International Application No :NA
Filing Date :NA
(87) International Publication No :NA
(61) Patent of Addition to Application Number :NA
Filing Date :NA
(62) Divisional to Application Number :NA
Filing Date :NA

(71)**Name of Applicant :**
1)LACHOO MEMORIAL COLLEGE OF SCIENCE & TECHNOLOGY, PHARMACY WING
Address of Applicant :LACHOO MEMORIAL COLLEGE OF SCIENCE & TECHNOLOGY, PHARMACY WING, SECTOR A, SHASTRI NAGAR, JODHPUR- 342003 (REJ.), INDIA Rajasthan India
(72)**Name of Inventor :**
1)NAGORI BADRI PRAKASH
2)MATHUR VIPIN

(57) Abstract :
The invention relates to novel effervescent formulations comprising Tramadol or its acceptable salts and Acetaminophen; and process of producing such formulations. The formulation according to the present invention comprises of an acid-base couple in as low as 25% of the total weight of the formulation. Further according to the present invention, at least 90% of both the drugs are dissolved within 1 minute, when dissolution of the formulation is carried out in USP dissolution apparatus II at 30 rpm in 900 ml 0.1 N hydrochloric acid at 37°C.

No. of Pages : 10 No. of Claims : 9

(12) PATENT APPLICATION PUBLICATION
(21) Application No.3868/DEL/2011 A
(19) INDIA
(22) Date of filing of Application :29/12/2011
(43) Publication Date : 05/07/2013

(54) Title of the invention : SOLAR MODULE HEAT TRANSFER SYSTEM

(51) International classification :G01D
(31) Priority Document No :NA
(32) Priority Date :NA
(33) Name of priority country :NA
(86) International Application No :NA
Filing Date :NA
(87) International Publication No :NA
(61) Patent of Addition to Application Number :NA
Filing Date :NA
(62) Divisional to Application Number :NA
Filing Date :NA

(71)**Name of Applicant :**
1)MEMC SINGAPORE PTE, LTD.
Address of Applicant :501 PEARL DRIVE, ST. PETERS, MISSOURI 63376, UNITED STATES OF AMERICA
(72)**Name of Inventor :**
1)SANDEEP RAMMOHAN KOPPIKAR
2)VIKRANT ASHOK CHAUDHARI
3)PARESH SURESH NASIKKAR
4)NAGENDRA SRINIVAS CHERUKUPALLI

(57) Abstract :
A solar module having improved heat transfer properties is disclosed. The module has an upper surface and a lower surface and includes a photovoltaic cell having a front side and a back side. A back side encapsulant is disposed adjacent the back side of the cell and extends adjacent the lower surface of the module. A front side encapsulant is disposed adjacent the front side of the cell and extends adjacent the upper surface of the module. Regions of particles are disposed in the front side encapsulant. The particles have a heat transfer coefficient greater than a heat transfer coefficient of the front side encapsulant and facilitate the anisotropic transfer of heat through the module.

No. of Pages : 24 No. of Claims : 26

(12) PATENT APPLICATION PUBLICATION
(21) Application No.3422/DEL/2011 A
(19) INDIA
(22) Date of filing of Application :29/12/2011
(43) Publication Date : 05/07/2013

(54) Title of the invention : COST-EFFECTIVE NATURAL SALT FORMULATIONS FOR SEAWATER SUBSTITUTION, MINERAL FORTIFICATION AND PROCESSES THEREOF

(51) International classification :H01S
(31) Priority Document No :NA
(32) Priority Date :NA
(33) Name of priority country :NA
(86) International Application No :NA
Filing Date :NA
(87) International Publication No :NA
(61) Patent of Addition to Application Number :NA
Filing Date :NA
(62) Divisional to Application Number :NA
Filing Date :NA

(71)**Name of Applicant :**
1)COUNCIL OF SCIENTIFIC & INDUSTRIAL RESEARCH
Address of Applicant :ANUSANDHAN BHAWAN, RAFI MARG, NEW DELHI-110001, INDIA Delhi India
(72)**Name of Inventor :**
1)PUSHPITO KUMAR GHOSH
2)SUMESH CHANDRA UPADHYAY
3)SANDHYA CHANDRIKAPRASAD MISHRA
4)VADAKKE PUTHOOR MOHANDAS
5)DIVESH NARAYAN SRIVASTAVA
6)VINOD KUMAR SHAHI
7)RAHUL JASVANTRAI SANGHAVI
8)SREEKUMARAN THAMPY
9)BABULAL SURABHAI MAKWANA
10)IMRAN PANCHA
11)RUMA PAL
12)RAMKRISHNA SEN

(57) Abstract :
The present invention relates to a practical device for desalination of sub-soil brine in remote locations. More particularly, the invention relates to the production of drinking water from such brine using exhaust waste energy from diesel engine employed to pump the sub¬soil brine for charging into solar pans for salt production. Still more particularly, the invention relates to a sustainable and standalone method of obtaining drinking/cooking water in inexpensive manner utilising the resources available in the salt works itself.

No. of Pages : 24 No. of Claims : 15

(12) PATENT APPLICATION PUBLICATION
(21) Application No.12/DEL/2012 A
(19) INDIA
(22) Date of filing of Application :03/01/2012
(43) Publication Date : 05/07/2013

(54) Title of the invention : A PROCESS FOR CHEMICAL CONVERSION OF ISOLATED CELLULOSE FROM AROMATIC SPENT BIOMASS TO HYDROXY METHYL FURFURAL

(51) International classification :C12N
(31) Priority Document No :NA
(32) Priority Date :NA
(33) Name of priority country :NA
(86) International Application No :NA
Filing Date :NA
(87) International Publication No :NA
(61) Patent of Addition to Application Number :NA
Filing Date :NA
(62) Divisional to Application Number :NA
Filing Date :NA

(71)**Name of Applicant :**
1)COUNCIL OF SCIENTIFIC & INDUSTRIAL RESEARCH
Address of Applicant :ANUSANDHAN BHAWAN, RAFI MARG, NEW DELHI - 110 001, INDIA. Delhi India
(72)**Name of Inventor :**
1)ROUT, PRASANTA KUMAR
2)NANNAWARE, ASHWEEN DEEPAK
3)RAJASEKHARAN, RAM

(57) Abstract :
The present invention provides a new green process for production of hydroxy methyl furfural (HMF) from isolated cellulose, which is obtained from spent aromatic biomass. The schematic diagram of the process is as given below: Cellulose used in this reaction is isolated from spent aromatic biomass by a combination of NaOH and urea solution. The isolated cellulose is then dissolved in a mixture of choline chloride based solvent (eutectic solvent) at 140 degree C for 3 to 5 h to get a viscous solution. Then, the cellulose solution is treated with Dowex 50 WX8 / Indion 225H resin and -H-Zeolite / -H-Zeolite for the synthesis of HMF at 120 degree C. After 2 hours of reaction, HMF is then isolated from the reaction mixture by liquid-solvent (ethyl acetate / methyl isobutyl ketone) extraction process. Again, the residual reaction mixture is allowed for another 2 hours to get the additional amounts of HMF in the same reaction conditions as discussed above. The complete process follows a green route for the synthesis of HMF from isolated cellulose.

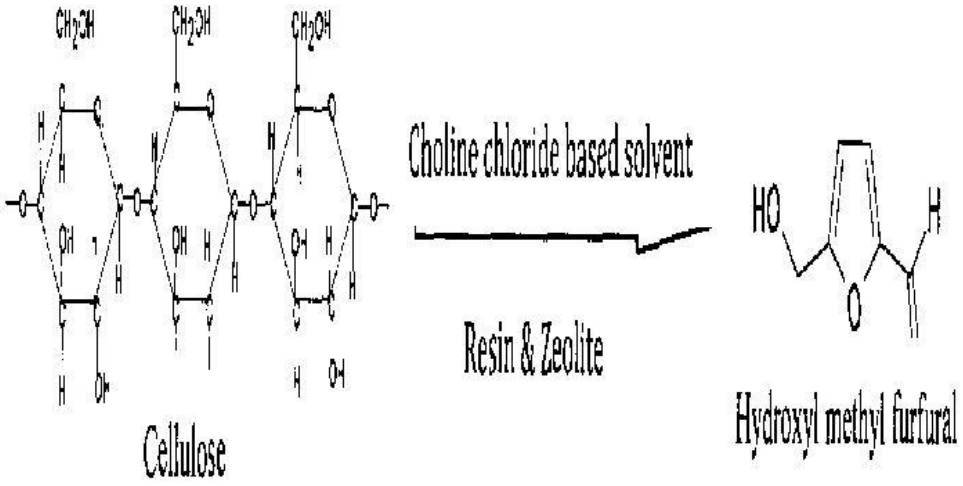

No. of Pages : 33 No. of Claims : 12

(12) PATENT APPLICATION PUBLICATION
(21) Application No.17/DEL/2012 A
(19) INDIA
(22) Date of filing of Application :03/01/2012
(43) Publication Date : 05/07/2013

(54) Title of the invention : METHOD AND APPARATUS FOR DETECTION OF BLOCKAGE IN MEDICAL NEEDLES

(51) International classification :F17B
(31) Priority Document No :NA
(32) Priority Date :NA
(33) Name of priority country :NA
(86) International Application No :NA
Filing Date :NA
(87) International Publication No :NA
(61) Patent of Addition to Application Number :NA
Filing Date :NA
(62) Divisional to Application Number :NA
Filing Date :NA

(71)**Name of Applicant :**
1)POLY MEDICURE LIMITED
Address of Applicant :PLOT NO. 105, SECTOR 59, HSIIDC INDUSTRIAL AREA, FARIDABAD, HARYANA - 121004, INDIA Haryana India
(72)**Name of Inventor :**
1)BAID, RISHI

(57) Abstract :
This invention relates to medical needles for IV catheter devices. More particularly, the present invention relates to a method and apparatus for detection of blockage in medical needles.

No. of Pages : 22 No. of Claims : 11

(12) PATENT APPLICATION PUBLICATION
(21) Application No.2789/MUM/2011 A
(19) INDIA
(22) Date of filing of Application :30/12/2011
(43) Publication Date : 05/07/2013

(54) Title of the invention : FERRITE CORE BASED INVERTER WITH INTEGRATED SYSTEMS FOR PROVIDING USER-FRIENDLY INTERFACE AND ERROR HANDLING CAPABILITY

(51) International classification	:G01V 3/00
(31) Priority Document No	:NA
(32) Priority Date	:NA
(33) Name of priority country	:NA
(86) International Application No	:NA
Filing Date	:NA
(87) International Publication No	:N/A
(61) Patent of Addition to Application Number	:NA
Filing Date	:NA
(62) Divisional to Application Number	:NA
Filing Date	:NA

(71)**Name of Applicant :**
1)RICHA TEJAS NADKAR
Address of Applicant :'OM',12,KALE PARK,BANER ROAD,BEHIND HOTEL RAJWADA,PUNE 411008,MAHARASHTRA,INDIA
2)VIJAY SHANKAR DESHPANDE
(72)**Name of Inventor :**
1)RICHA TEJAS NADKAR
2)VIJAY SHANKAR DESHPANDE

(57) Abstract :
Disclosed herein is a bidirectional inverter system design based on the sinusoidal pulse-width modulation principle and the use of a low-cost and lightweight ferrite-core transformer implemented with centrally aligned regenerative rectifier with loss less snubber circuit.

No. of Pages : 28 No. of Claims : 9

(12) PATENT APPLICATION PUBLICATION
(19) INDIA
(22) Date of filing of Application :27/12/2011
(21) Application No.3670/MUM/2011 A
(43) Publication Date : 05/07/2013

(54) Title of the invention : MODIFIED IMPELLER

(51) International classification	:F04D 5/00
(31) Priority Document No	:NA
(32) Priority Date	:NA
(33) Name of priority country	:NA
(86) International Application No	:NA
Filing Date	:NA
(87) International Publication No	:N/A
(61) Patent of Addition to Application Number	:NA
Filing Date	:NA
(62) Divisional to Application Number	:NA
Filing Date	:NA

(71)**Name of Applicant :**
1)MANDAR ANANT VALAVALKAR
Address of Applicant :6/307, KAPASI NIWAS, C.H.S.,LILIYA NAGAR, S.V. ROAD, GOREGAON-WEST, MUMBAI-400062 Maharashtra India
2)TEJAS HEMANT PHATAK
(72)**Name of Inventor :**
1)MANDAR ANANT VALAVALKAR
2)TEJAS HEMANT PHATAK

(57) Abstract :
The invention deals with a modified 'impeller ,of a blender for blending essentially viscous fluids-useful particularly for food and pharmaceutical industry. The modified impeller of the present invention comprises of spring like structures in place of blades attached to the driving vertical shaft for overcoming the drawbacks of blenders with conventional blades The modified impeller overcomes the common problems such as -vortex formation, accumulation of products on the walls of the container etc.

No. of Pages : 14 No. of Claims : 10

(12) PATENT APPLICATION PUBLICATION
(19) INDIA
(22) Date of filing of Application :27/12/2011
(21) Application No.3671/MUM/2011 A
(43) Publication Date : 05/07/2013

(54) Title of the invention : ONE POT PROCESS FOR THE PREPARATION OF BENZIMIDAZOLE DERIVATIVES.

(51) International classification	:C07D 235/06
(31) Priority Document No	:NA
(32) Priority Date	:NA
(33) Name of priority country	:NA
(86) International Application No	:NA
Filing Date	:NA
(87) International Publication No	:N/A
(61) Patent of Addition to Application Number	:NA
Filing Date	:NA
(62) Divisional to Application Number	:NA
Filing Date	:NA

(71)**Name of Applicant :**
1)CADILA HEALTHCARE LIMITED
Address of Applicant :CADILA HEALTHCARE LIMITED PLOT NO.26-29 & 31, DABHASA-UMARAYA ROAD, VILL. DABHASA-391 440, TAL. PADRA, DIST. VADODARA, GUJARAT, INDIA.
(72)**Name of Inventor :**
1)DWIVEDI SHRIPRAKASH DHAR
2)PRASAD ASHOK
3)PAL DAYA RAM

(57) Abstract :
The present invention discloses one pot process for enantioselective synthesis of single enantiomers of substituted sulphoxides 2-(2-pyridinylmethylsulphinyl)-lH-benzimidazoles or said compounds in an enantiomerically enriched form.

No. of Pages : 29 No. of Claims : 35

(12) PATENT APPLICATION PUBLICATION
(21) Application No.3672/MUM/2011 A
(19) INDIA
(22) Date of filing of Application :27/12/2011
(43) Publication Date : 05/07/2013

(54) Title of the invention : A SYSTEM AND METHOD FOR TRACKING CONCURRENT RELEASES IN SOFTWARE LIFECYCLE MANAGEMENT PROCESS

(51) International classification	:G06F 9/445
(31) Priority Document No	:NA
(32) Priority Date	:NA
(33) Name of priority country	:NA
(86) International Application No	:NA
Filing Date	:NA
(87) International Publication No	:N/A
(61) Patent of Addition to Application Number	:NA
Filing Date	:NA
(62) Divisional to Application Number	:NA
Filing Date	:NA

(71)**Name of Applicant :**
1)TATA CONSULTANCY SERVICES LIMITED
Address of Applicant :NIRMAL BUILDING, 9TH FLOOR, NARIMAN POINT, MUMBAI 400021, MAHARASHTRA, INDIA.
(72)**Name of Inventor :**
1)GUPTA, ANKUSH KUMAR
2)SWAIN, SHIBA PRASAD
3)SETHI, BHUBANESWAR
4)KAR, CHANDAN

(57) Abstract :
A system and method for real-time tracking of the status of a planned and actual release details in the QA process management of the software project managemQut is described herein. According to the present invention, as-soon-as a new release request for a particular software product is received, the planned release details are compared with actual release details for the said received request. As a result of comparison, a real-time report is generated that depicts the variance in information of the actual release details to that of the planned release details associated with the requested release. The report is then displayed to the parties associated with the release for future tracking.

No. of Pages : 20 No. of Claims : 10

(12) PATENT APPLICATION PUBLICATION
(21) Application No.3674/MUM/2011 A
(19) INDIA
(22) Date of filing of Application :27/12/2011
(43) Publication Date : 05/07/2013

(54) Title of the invention : A METHOD AND SYSTEM FOR CREATING AN INTELLIGENT SOCIAL NETWORK BETWEEN PLURALITY OF DEVICES

(51) International classification	:G06Q 30/02
(31) Priority Document No	:NA
(32) Priority Date	:NA
(33) Name of priority country	:NA
(86) International Application No	:NA
Filing Date	:NA
(87) International Publication No	:N/A
(61) Patent of Addition to Application Number	:NA
Filing Date	:NA
(62) Divisional to Application Number	:NA
Filing Date	:NA

(71)**Name of Applicant :**
1)TATA CONSULTANCY SERVICES LIMITED
Address of Applicant :NIRMAL BUILDING, 9TH FLOOR, NARIMAN POINT, MUMBAI 400021, MAHARASHTRA, INDIA.
(72)**Name of Inventor :**
1)SINHA, PRIYANKA
2)BHAUMIK, CHIRABRATA
3)GHOSE, AVIK

(57) Abstract :
A method and system is provided for creating an intelligent social network (220) between a plurality of devices participating in a social network over internet. Particularly, the invention provides a method and system for creating an intelligent social network of a plurality of devices, wherein an intent of at least one user of a first device is detected by one or more of subsequent devices out of the plurality of devices, based on one or more pre-defined parameters; a match between one or more common intent of the user of the first device and the one or more users of the one or more subsequent devices is detected and information pertaining to the same is transmitted for enabling communication and formation of intelligent social network between the first device and the one or more of subsequent devices.

No. of Pages : 24 No. of Claims : 16

(12) PATENT APPLICATION PUBLICATION
(21) Application No.3691/MUM/2011 A
(19) INDIA
(22) Date of filing of Application :29/12/2011
(43) Publication Date : 05/07/2013

(54) Title of the invention : DATABASE VERSION MANAGEMENT SYSTEM

(51) International classification	:G06F 17/30
(31) Priority Document No	:NA
(32) Priority Date	:NA
(33) Name of priority country	:NA
(86) International Application No	:NA
Filing Date	:NA
(87) International Publication No	:N/A
(61) Patent of Addition to Application Number	:NA
Filing Date	:NA
(62) Divisional to Application Number	:NA
Filing Date	:NA

(71)**Name of Applicant :**
1)TATA CONSULTANCY SERVICES LIMITED
Address of Applicant :NIRMAL BUILDING, 9TH FLOOR, NARIMAN POINT, MUMBAI 400021, MAHARASHTRA, INDIA.
(72)**Name of Inventor :**
1)IYER, HARISH SIVASUBRAMANIAN
2)DASH, HEMANTA
3)ANJAN, GURURAJ

(57) Abstract :
Systems and methods for managing versions of a database are described herein. The system (102) includes a worklist module (108) configured to receive a plurality of change requests and generate a first worklist based on them. The plurality of change requests include instructions for modifying one of a database structure and/or master data of the database (103). One or more change requests may be approved from the first worklist. The worklist module (108) generates a second worklist comprising the approved change requests. One or more change requests included in the second worklist are executed to create a version of the database (103). A versioning module (110) may maintain and track a plurality of versions within the database (103). A comparison module (212) may allow comparison and synchronization of the plurality of versions of the database (103) based on the results of comparison and needs in specific environment.

No. of Pages : 37 No. of Claims : 20

(12) PATENT APPLICATION PUBLICATION
(19) INDIA
(22) Date of filing of Application :29/12/2011
(21) Application No.3692/MUM/2011 A
(43) Publication Date : 05/07/2013

(54) Title of the invention : METADATA VERSIONING

(51) International classification	:G06F 17/30
(31) Priority Document No	:NA
(32) Priority Date	:NA
(33) Name of priority country	:NA
(86) International Application No	:NA
Filing Date	:NA
(87) International Publication No	:N/A
(61) Patent of Addition to Application Number	:NA
Filing Date	:NA
(62) Divisional to Application Number	:NA
Filing Date	:NA

(71)**Name of Applicant :**
1)TATA CONSULTANCY SERVICES LIMITED
Address of Applicant :NIRMAL BUILDING, 9TH FLOOR, NARIMAN POINT, MUMBAI 400021, MAHARASHTRA, INDIA.
(72)**Name of Inventor :**
1)KHASHILKAR, KAMLESH

(57) Abstract :
Systems and method of creating and maintain metadata versions are described. In one embodiment, the method comprises capturing at least one metadata update from a source system. The at least one metadata update includes at least transformed portion of metadata. Further, the method comprises comparing the at least one metadata update with a recent metadata version in a centralized metadata repository to determine a type of metadata update. The type of metadata update is one of addition of metadata and modification of metadata in the source system. Based on the comparing, a metadata version in the centralized metadata repository is created.

No. of Pages : 23 No. of Claims : 10

(12) PATENT APPLICATION PUBLICATION
(21) Application No.3693/MUM/2011 A
(19) INDIA
(22) Date of filing of Application :29/12/2011
(43) Publication Date : 05/07/2013

(54) Title of the invention : DATA ARCHIVING AND DE-ARCHIVING IN A BUSINESS ENVIRONMENT

(51) International classification	:G06F 11/14
(31) Priority Document No	:NA
(32) Priority Date	:NA
(33) Name of priority country	:NA
(86) International Application No	:NA
Filing Date	:NA
(87) International Publication No	:N/A
(61) Patent of Addition to Application Number	:NA
Filing Date	:NA
(62) Divisional to Application Number	:NA
Filing Date	:NA

(71)**Name of Applicant :**
1)TATA CONSULTANCY SERVICES LIMITED
Address of Applicant :NIRMAL BUILDING, 9TH FLOOR, NARIMAN POINT, MUMBAI 400021, MAHARASHTRA, INDIA.
(72)**Name of Inventor :**
1)NANDA, SIMANCHALA
2)IYERS, HARISH

(57) Abstract :
A computer implemented method for data archiving and dearchiving in a business environment is described herein. According to an implementation, the method includes obtaining metadata configuration associated with a source database storing transaction information, the transaction information being related to a business transaction. Based on the metadata configuration an archive specification is generated. Further, based on the archive specification and the metadata configuration, an archive mapping is configured. According to an aspect, the archive mapping is synchronized with an update in one of the metadata configuration. The archive mapping can be implemented for archiving the transaction information. Additionally, the archived transaction information can be de-archived, or can be purged onto a back-up repository.

No. of Pages : 36 No. of Claims : 17

(12) PATENT APPLICATION PUBLICATION
(21) Application No.3694/MUM/2011 A
(19) INDIA
(22) Date of filing of Application :29/12/2011
(43) Publication Date : 05/07/2013

(54) Title of the invention : MANAGING A PROJECT DURING TRANSITION

(51) International classification	:G06F 15/16
(31) Priority Document No	:NA
(32) Priority Date	:NA
(33) Name of priority country	:NA
(86) International Application No	:NA
Filing Date	:NA
(87) International Publication No	:N/A
(61) Patent of Addition to Application Number	:NA
Filing Date	:NA
(62) Divisional to Application Number	:NA
Filing Date	:NA

(71)**Name of Applicant :**
1)TATA CONSULTANCY SERVICES LIMITED
Address of Applicant :NIRMAL BUILDING, 9TH FLOOR, NARIMAN POINT, MUMBAI 400021, MAHARASHTRA, INDIA.
(72)**Name of Inventor :**
1)RAMAN, VENKATARAMA KOTHANDA

(57) Abstract :
A method and a system (100) for managing a project during transition are provided. The system (100) comprises a processor (102), an interface (104), and a memory (106) coupled to the processor (102). The system (100) receives a request for initiating the project through the interface (104). The memory (106) comprises a back end module (112) and a front end module (114). The back end module (112) is configured to create a standard project workspace and a standard project plan upon receiving the request to initiating the project. The front end module (114) is configured to generate in real time one or more status reports of the project for various stakeholders. These status reports are based on the standard project plan.

No. of Pages : 24 No. of Claims : 28

(12) PATENT APPLICATION PUBLICATION
(21) Application No.1/MUM/2012 A
(19) INDIA
(22) Date of filing of Application :02/01/2012
(43) Publication Date : 05/07/2013

(54) Title of the invention : EARTHING ASSEMBLY FOR AIR CIRCUIT BREAKER PROVIDING LOW IMPEDANCE

(51) International classification	:H01H31/28	(71)**Name of Applicant :**
(31) Priority Document No	:NA	**1)LARSEN & TOUBRO LIMITED**
(32) Priority Date	:NA	Address of Applicant :L & T House Ballard Estate Mumbai 400 001 State of Maharashtra India
(33) Name of priority country	:NA	
(86) International Application No	:NA	(72)**Name of Inventor :**
Filing Date	:NA	**1)RODE Prashant**
(87) International Publication No	: NA	
(61) Patent of Addition to Application Number	:NA	
Filing Date	:NA	
(62) Divisional to Application Number	:NA	
Filing Date	:NA	

(57) Abstract :
This invention relates generally to an earthing assembly for circuit breakers and more particularly to an earthing assembly for air circuit breaker providing low impedance having a fixed earthing contact mounted on a cradle, a sliding earthing contact mounted on a breaker and a breaker right supporting plate, said earthing assembly comprising cantilever spring means that include earthing support (3) & fixed earthing contact (1); and a restraining spring means placed in downward direction at the cantilever end of said fixed earthing contact. Additionally, this earthing assembly is simple and cost effective.

No. of Pages : 13 No. of Claims : 8

(12) PATENT APPLICATION PUBLICATION
(21) Application No.3701/MUM/2011 A
(19) INDIA
(22) Date of filing of Application :29/12/2011
(43) Publication Date : 05/07/2013

(54) Title of the invention : A METHOD AND SYSTEM FOR PROTECTING USER SECRET INFORMATION SUCH AS PASSWORD FROM ATTACKS

(51) International classification	:H04K 1/00
(31) Priority Document No	:NA
(32) Priority Date	:NA
(33) Name of priority country	:NA
(86) International Application No	:NA
Filing Date	:NA
(87) International Publication No	:N/A
(61) Patent of Addition to Application Number	:NA
Filing Date	:NA
(62) Divisional to Application Number	:NA
Filing Date	:NA

(71)**Name of Applicant :**
1)TATA CONSULTANCY SERVICES LIMITED
Address of Applicant :NIRMAL BUILDING, 9TH FLOOR, NARIMAN POINT, MUMBAI 400021, MAHARASHTRA, INDIA.
(72)**Name of Inventor :**
1)MAHANSARIA, DIVYANS

(57) Abstract :
A method and system for protecting user secret information such as passwords from different attacks is disclosed herein. According to the method and system of the present invention, the user password is dynamically ciphered by entering few elements of the password in ciphered form while the remaining elements as it is in non-ciphered form at each instance of login of the user in an electronic device. The user is authenticated based on dynamic deciphering of the password by deciphering the ciphered elements allowing the user to access the electronic device.

No. of Pages : 29 No. of Claims : 15

(12) PATENT APPLICATION PUBLICATION
(21) Application No.3702/MUM/2011 A
(19) INDIA
(22) Date of filing of Application :29/12/2011
(43) Publication Date : 05/07/2013

(54) Title of the invention : A METHOD FOR EMBEDDING AND MULTIPLEXING AUDIO METADATA IN A BROADCASTED ANALOG VIDEO STREAM

(51) International classification :H04N 21/435
(31) Priority Document No :NA
(32) Priority Date :NA
(33) Name of priority country :NA
(86) International Application No :NA
Filing Date :NA
(87) International Publication No :N/A
(61) Patent of Addition to Application Number :2422/MUM/2011
Filed on :29/08/2011
(62) Divisional to Application Number :NA
Filing Date :NA

(71)**Name of Applicant :**
1)TATA CONSULTANCY SERVICES LIMITED
Address of Applicant :NIRMAL BUILDING, 9TH FLOOR, NARIMAN POINT, MUMBAI 400021, MAHARASHTRA, INDIA.
(72)**Name of Inventor :**
1)SINHA, ANIRUDDHA
2)SAHA, ARINDAM
3)PAL, ARPAN
4)BASU, ANUPAM

(57) Abstract :
A method for embedding, multiplexing and broadcasting of multiple audio metadata in an analog video stream and thereby generating output analog video containing multiple separable audio-video tuples of optimum quality. Further, a user study is performed on a sample tutorial video for various frame rates and resolution to calculate the mean opinion score for deriving the degree of multiplexing that may be provided without deteriorating the quality of video.

No. of Pages : 13 No. of Claims : 1

(12) PATENT APPLICATION PUBLICATION
(21) Application No.3705/MUM/2011 A
(19) INDIA
(22) Date of filing of Application :29/12/2011
(43) Publication Date : 05/07/2013

(54) Title of the invention : POWER TAKE-OFF SHIFTING SYSTEM FOR WORK VEHICLES

(51) International classification	:B60W 10/02
(31) Priority Document No	:NA
(32) Priority Date	:NA
(33) Name of priority country	:NA
(86) International Application No	:NA
Filing Date	:NA
(87) International Publication No	:N/A
(61) Patent of Addition to Application Number	:NA
Filing Date	:NA
(62) Divisional to Application Number	:NA
Filing Date	:NA

(71)**Name of Applicant :**
1)MAHINDRA & MAHINDRA LIMITED
Address of Applicant :GATEWAY BUILDING, APOLLO BUNDER, MUMBAI-400001, MAHARASHTRA, INDIA
(72)**Name of Inventor :**
1)DWIVEDI, KARAN
2)NAGENDRAN, GIREESH KUMAR
3)DESHMUKH, RAHUL S
4)SHRIKANT, JOSHI S

(57) Abstract :
A Power Take-off (PTO) shifting system used with agricultural and construction vehicles such as tractors and alike for ensuring availability of complete power at a combustion engine, especially when work vehicle is motionless, is disclosed. The disclosed system comprising a PTO drive coupling and a dog clutch, with a dog clutch suitably positioned at optional positions to derive the desired results.

No. of Pages : 21 No. of Claims : 12

(12) PATENT APPLICATION PUBLICATION
(19) INDIA
(22) Date of filing of Application :29/12/2011
(21) Application No.3706/MUM/2011 A
(43) Publication Date : 05/07/2013

(54) Title of the invention : MULTI-SPEED POWER TAKE-OFF TRANSMISSION SYSTEM FOR WORK VEHICLES

(51) International classification	:F16H 37/04
(31) Priority Document No	:NA
(32) Priority Date	:NA
(33) Name of priority country	:NA
(86) International Application No	:NA
Filing Date	:NA
(87) International Publication No	:N/A
(61) Patent of Addition to Application Number	:NA
Filing Date	:NA
(62) Divisional to Application Number	:NA
Filing Date	:NA

(71)**Name of Applicant :**
1)MAHINDRA & MAHINDRA LIMITED
Address of Applicant :GATEWAY BUILDING, APOLLO BUNDER, MUMBAI -400001, MAHARASHTRA, INDIA
(72)**Name of Inventor :**
1)NAGARAJ, SATISH KUMAR
2)MOLKERI, OMKAR RAJSHEKAR
3)BALASUBRAMANIAN, JAIGANESH

(57) Abstract :
A power take-off transmission system with three speeds of rotations comprising two forward rotational speeds and a reverse rotational speed is disclosed. The power take-off transmission system of the present invention is operated only with a single lever for engaging and disengaging the power take-off shaft with the engine power and selecting the gear ratio & rotation. The use of a single lever instead of gear selection system for choosing multiple speeds is cost effective as well as operator friendly.

No. of Pages : 23 No. of Claims : 16

(12) PATENT APPLICATION PUBLICATION
(21) Application No.3655/MUM/2011 A
(19) INDIA
(22) Date of filing of Application :24/12/2011
(43) Publication Date : 05/07/2013

(54) Title of the invention : COMPRESSION OF GENOMIC DATA FILE

(51) International classification	:G06F 17/30
(31) Priority Document No	:NA
(32) Priority Date	:NA
(33) Name of priority country	:NA
(86) International Application No	:NA
Filing Date	:NA
(87) International Publication No	: NA
(61) Patent of Addition to Application Number	:NA
Filing Date	:NA
(62) Divisional to Application Number	:NA
Filing Date	:NA

(71)**Name of Applicant :**
1)TATA CONSULTANCY SERVICES LIMITED
Address of Applicant :Nirmal Building 9th Floor Nariman Point Mumbai Maharashtra India
(72)**Name of Inventor :**
1)MANDE Sharmila Shekhar
2)MOHAMMED Monzoorul Haque
3)DUTTA Anirban
4)BOSE Tungadri

(57) Abstract :
Systems and methods for compression of a genomic data file are described herein. In one embodiment, genomic sequences, sequence headers, and quality sequences associated with a plurality of data streams provided in a genomic data file are identified. Each of the genomic sequences includes at least one of primary characters and secondary characters. Further, the secondary characters from each of the genomic sequences may be removed to obtain an intermediate genomic sequence file and a quality score corresponding to the secondary character may be modified in quality sequences to obtain an intermediate quality sequence file. Based on the intermediate genomic sequence file and the intermediate quality sequence file, a modified genomic sequence file and a modified quality sequence file, respectively are generated. A compressed genomic data file is obtained using at least the modified genomic sequence and the modified quality sequence.

No. of Pages : 41 No. of Claims : 17

(12) PATENT APPLICATION PUBLICATION
(19) INDIA
(22) Date of filing of Application :27/12/2011
(21) Application No.3666/MUM/2011 A
(43) Publication Date : 05/07/2013

(54) Title of the invention : LABEL COVER ASSEMBLY FOR ELECTRICAL COMPONENTS

(51) International classification :G03B 19/04
(31) Priority Document No :NA
(32) Priority Date :NA
(33) Name of priority country :NA
(86) International Application No :NA
Filing Date :NA
(87) International Publication No :N/A
(61) Patent of Addition to Application Number :NA
Filing Date :NA
(62) Divisional to Application Number :NA
Filing Date :NA

(71)**Name of Applicant :**
1)LARSEN & TOUBRO LIMITED
Address of Applicant :L&T HOUSE, BALLARD ESTATE, MUMBAI-400001, MAHARASHTRA STATE, INDIA
(72)**Name of Inventor :**
1)BIANCHI, ALBERTO
2)ROSSI, DAVIDE

(57) Abstract :
The present invention provides a Cover assembly for an electrical component, the assembly comprising a cover for holding a label, the cover having guiding frames at opposite edges; and a seat on a housing of the circuit breaker, the seat having pins on opposite sides, the pins engaging with the guiding frames of the cover.

No. of Pages : 14 No. of Claims : 2

(12) PATENT APPLICATION PUBLICATION
(21) Application No.3667/MUM/2011 A
(19) INDIA
(22) Date of filing of Application :27/12/2011
(43) Publication Date : 05/07/2013

(54) Title of the invention : RESIDUAL CURRENT CIRCUIT BREAKER WITH OVERCURRENT PROTECTION (RCBO) WITH AN IMPROVED RESIDUAL CURRENT KINEMATIC CHAIN

(51) International classification	:H01H 9/26
(31) Priority Document No	:NA
(32) Priority Date	:NA
(33) Name of priority country	:NA
(86) International Application No	:NA
Filing Date	:NA
(87) International Publication No	:N/A
(61) Patent of Addition to Application Number	:NA
Filing Date	:NA
(62) Divisional to Application Number	:NA
Filing Date	:NA

(71)**Name of Applicant :**
1)LARSEN & TOUBRO LIMITED
Address of Applicant :L&T HOUSE, BALLARD ESTATE, MUMBAI-400001, MAHARASHTRA STATE, INDIA
(72)**Name of Inventor :**
1)CONTARDI AUGUSTO
2)CONTARDI ANDREA

(57) Abstract :
The present invention relates to residual circuit breakers with overload protection with an improved residual current kinematic chain. In one embodiment, a Residual Current Breaker with Overload (RCBO), includes a casing with a first housing and a second housing, wherein the first housing and the second housing are separated by a first separation means, wherein the first housing including electrical components of miniature circuit board (MCB), and the second housing including neutral kinematic chain and a residual current device and its kinematic chain, and wherein the residual current device includes a containment box for the test resistance.

No. of Pages : 20 No. of Claims : 3

(12) PATENT APPLICATION PUBLICATION
(21) Application No.3668/MUM/2011 A
(19) INDIA
(22) Date of filing of Application :27/12/2011
(43) Publication Date : 05/07/2013

(54) Title of the invention : CLIP ASSEMBLY FOR ELECTRICAL COMPONENTS

(51) International classification	:H05K 7/20
(31) Priority Document No	:NA
(32) Priority Date	:NA
(33) Name of priority country	:NA
(86) International Application No	:NA
Filing Date	:NA
(87) International Publication No	:N/A
(61) Patent of Addition to Application Number	:NA
Filing Date	:NA
(62) Divisional to Application Number	:NA
Filing Date	:NA

(71)**Name of Applicant :**
1)LARSEN & TOUBRO LIMITED
Address of Applicant :L&T HOUSE, BALLARD ESTATE, MUMBAI-400001, MAHARASHTRA STATE, INDIA
(72)**Name of Inventor :**
1)BIANCHI, ALBERTO
2)ROSSI, DAVIDE

(57) Abstract :
The present invention provides a clip assembly for an Electrical component, the assembly comprising a clip having closed frame with a pair of longitudinal members devised for mounting the clip on the electrical component; and a pair of flexible longitudinal arms provided inside the frame, each arm having a plurality of cams on the longitudinal arms; and a clip seat mounted on a housing of the electrical component, the clip seat having at least two teeth, each teeth locking with a corresponding cam on the longitudinal arms, the locking corresponding to predetermined positioning of the clip.

No. of Pages : 15 No. of Claims : 1

(12) PATENT APPLICATION PUBLICATION
(21) Application No.3669/MUM/2011 A
(19) INDIA
(22) Date of filing of Application :27/12/2011
(43) Publication Date : 05/07/2013

(54) Title of the invention : RESIDUAL CURRENT CIRCUIT BREAKER WITH OVERCURRENT PROTECTION (RCBO) WITH AN IMPROVED NEUTRAL POLE KINEMATIC CHAIN

(51) International classification	:H01H 9/26
(31) Priority Document No	:NA
(32) Priority Date	:NA
(33) Name of priority country	:NA
(86) International Application No	:NA
Filing Date	:NA
(87) International Publication No	:N/A
(61) Patent of Addition to Application Number	:NA
Filing Date	:NA
(62) Divisional to Application Number	:NA
Filing Date	:NA

(71)**Name of Applicant :**
1)LARSEN & TOUBRO LIMITED
Address of Applicant :L&T HOUSE, BALLARD ESTATE, MUMBAI-400001, MAHARASHTRA STATE, INDIA
(72)**Name of Inventor :**
1)CONTARDI AUGUSTO
2)CONTARDI ANDREA

(57) Abstract :
The present invention provides a residual current breaker with over current protection (RCBO), comprising a first housing enclosing a miniature circuit breaker (MCB) and a second housing separated from the first housing by a main frame. The second housing includes a first enclosure for a neutral kinematic chain and a second enclosure for a residual current device. The first enclosure and the second enclosure is separated by a secondary frame thereby physically separating neutral pole kinematic chain from a residual current kinematic chain of the residual current device. A pin of the MCB protrudes inside the first enclosure of the second housing having the neutral kinematic chain.

No. of Pages : 19 No. of Claims : 2

(12) PATENT APPLICATION PUBLICATION
(21) Application No.3695/MUM/2011 A
(19) INDIA
(22) Date of filing of Application :29/12/2011
(43) Publication Date : 05/07/2013

(54) Title of the invention : ASSESSING MATURITY OF BUSINESS PROCESSES

(51) International classification	:G06Q 10/00
(31) Priority Document No	:NA
(32) Priority Date	:NA
(33) Name of priority country	:NA
(86) International Application No	:NA
Filing Date	:NA
(87) International Publication No	:N/A
(61) Patent of Addition to Application Number	:NA
Filing Date	:NA
(62) Divisional to Application Number	:NA
Filing Date	:NA

(71)**Name of Applicant :**
1)TATA CONSULTANCY SERVICES LIMITED
Address of Applicant :NIRMAL BUILDING, 9TH FLOOR, NARIMAN POINT, MUMBAI 400021, MAHARASHTRA, INDIA.
(72)**Name of Inventor :**
1)KAMATH, SHIRLEY
2)DAS SARMA, ASOKE
3)KERKAR, SHYAM
4)PRABHU, RAMESH

(57) Abstract :
A method and a system described herein relate to assessment of maturity of a business process. In one implementation, the method comprises obtaining business objectives of the business process, obtaining performance metrics of the business process based on the business objectives, evaluating a practice maturity score based on practices attributes for a current state of the business process, evaluating a performance maturity score based on performance attributes for the current state of the business process, and analyzing the practice maturity score and the performance maturity score with respect to each other. The practice attributes are based on the business objectives and the performance metrics and are at least one from people-related practices, process-related practices, technology-related practices and control-related practices. The performance attributes are based on the practice attributes and are at least one from efficiency-related key performance indicators and effectiveness-related key performance indicators.

No. of Pages : 32 No. of Claims : 19

(12) PATENT APPLICATION PUBLICATION
(21) Application No.3697/MUM/2011 A
(19) INDIA
(22) Date of filing of Application :29/12/2011
(43) Publication Date : 05/07/2013

(54) Title of the invention : A CONTROLLER WITH CONFIGURABLE REDUNDANT COIL-VOLTAGE SUPPLY COMPENSATION

(51) International classification	:H02M 7/5387
(31) Priority Document No	:NA
(32) Priority Date	:NA
(33) Name of priority country	:NA
(86) International Application No	:NA
Filing Date	:NA
(87) International Publication No	:N/A
(61) Patent of Addition to Application Number	:NA
Filing Date	:NA
(62) Divisional to Application Number	:NA
Filing Date	:NA

(71)**Name of Applicant :**
1)CROMPTON GREAVES LIMITED
Address of Applicant :CG HOUSE, 6TH FLOOR, DR.ANNIE BESANT ROAD, WORLI, MUMBAI-400 030, MAHARASHTRA, INDIA.
(72)**Name of Inventor :**
1)NAMJOSHI YOGENDRA
2)PANDHARKAR ANJANI
3)RAJPAL PRASHANT

(57) Abstract :
A controller, for a circuit breaker assembly, with configurable redundant coil-voltage supply compensation, said circuit breaker assembly comprising a main trip coil and a main close coil adapted to receive supply from a first supply line and an auxiliary close coil and an auxiliary close coil adapted to receive supply from a second supply line, said controller comprises: supply line sensing means adapted to sense first and second supply line pre-defined parameters in order to relay it to said controller; main and auxiliary trip coil health monitoring means adapted to monitor health of main trip coil and auxiliary trip coil in order to relay it to said controller; close trip coil health monitoring means adapted to monitor health of main close coil and auxiliary close coil in order to relay it to said controller; selection means adapted to select a trip coil and a close coil from a combination of said main trip coil and main close coil combination or said auxiliary trip coil and auxiliary close coil depending upon said main trip coil health and said main close coil health or said auxiliary trip coil health and said auxiliary close coil health and further adapted to select supply line depending upon said sensed first supply line parameters and said senses second supply line parameters; point-on-wave switching module adapted to compute point-on-wave switching parameters with respect to each of said main trip coil, main close coil, first supply line sensed parameters and said auxiliary trip coil, auxiliary close coil, second supply line sensed parameters; and actuation means adapted to actuate said selected main trip coil and said main close coil in relation to computed point-on-wave switching parameters or said selected auxiliary trip coil and said auxiliary close coil in relation to computed point-on-wave switching parameters.

No. of Pages : 24 No. of Claims : 3

(12) PATENT APPLICATION PUBLICATION
(21) Application No.3698/MUM/2011 A
(19) INDIA
(22) Date of filing of Application :29/12/2011
(43) Publication Date : 05/07/2013

(54) Title of the invention : AUTOMATED TEST CYCLE ESTIMATION SYSTEM AND METHOD

(51) International classification	:G10L 11/00
(31) Priority Document No	:NA
(32) Priority Date	:NA
(33) Name of priority country	:NA
(86) International Application No	:NA
Filing Date	:NA
(87) International Publication No	:N/A
(61) Patent of Addition to Application Number	:NA
Filing Date	:NA
(62) Divisional to Application Number	:NA
Filing Date	:NA

(71)**Name of Applicant :**
1)TATA CONSULTANCY SERVICES LIMITED
Address of Applicant :NIRMAL BUILDING, 9TH FLOOR, NARIMAN POINT, MUMBAI 400021, MAHARASHTRA, INDIA.
(72)**Name of Inventor :**
1)CHAKRABORTY, SOHAM SUNDAR
2)CHITTIMALLI, PAVAN KUMAR
3)SHAH, VIPUL

(57) Abstract :
A system and method is disclosed to estimate both, the time and number of resources required to execute a test suite or a subset of test suite in parallel, with the objective of providing a balanced workload distribution. The present invention partitions test suite for parallelization, given the dependencies that exists between test cases and test execution time.

No. of Pages : 36 No. of Claims : 21

(12) PATENT APPLICATION PUBLICATION
(21) Application No.3718/MUM/2011 A
(19) INDIA
(22) Date of filing of Application :30/12/2011
(43) Publication Date : 05/07/2013

(54) Title of the invention : A NOVEL PROCESS FOR THE PREPARATION OF STRONTIUM RANELATE AND ITS PHARMACEUTICALLY ACCEPTABLE SALTS THEREOF.

(51) International classification	:A61K 31/381
(31) Priority Document No	:NA
(32) Priority Date	:NA
(33) Name of priority country	:NA
(86) International Application No	:NA
Filing Date	:NA
(87) International Publication No	:N/A
(61) Patent of Addition to Application Number	:NA
Filing Date	:NA
(62) Divisional to Application Number	:NA
Filing Date	:NA

(71)**Name of Applicant :**
1)ARCH PHARMALABS LIMITED
Address of Applicant :H WING, 4TH FLOOR, TEX CENTRE, OFF SAKI VIHAR ROAD, CHANDIVALI, ANDHERI (EAST), MUMBAI-400 072, INDIA Maharashtra India
(72)**Name of Inventor :**
1)SHAILESH SHRIKANT ATHALYE
2)KALPESH DALPAT PARGHI
3)PRAVIN JAGANNATH PAWAR
4)RANBHAN KAMLESH JAYANTILAL

(57) Abstract :
Disclosed herein is an improved, commercially viable and industrially advantageous novel process for the preparation of Strontium ranelate of formula I chemically known as distrontium 5-[bis(2-oxido-2-oxoethyl)amino]-4-cyano-3-(2-oxido-2-oxoethyl)thiophene-2-carboxylate or 5-[bis(carboxymethyl)amino]-2-carboxy-4-cyano-3-thiopheneacetic acid distrontium salt and its intermediates, in high yield and purity.

No. of Pages : 40 No. of Claims : 12

(12) PATENT APPLICATION PUBLICATION
(19) INDIA
(22) Date of filing of Application :30/12/2011
(21) Application No.3719/MUM/2011 A
(43) Publication Date : 05/07/2013

(54) Title of the invention : INTEGRTED APPARATUS FOR EDUCATION OF SOLAR CELLS

(51) International classification	:H01L 31/042
(31) Priority Document No	:NA
(32) Priority Date	:NA
(33) Name of priority country	:NA
(86) International Application No	:NA
Filing Date	:NA
(87) International Publication No	:N/A
(61) Patent of Addition to Application Number	:NA
Filing Date	:NA
(62) Divisional to Application Number	:NA
Filing Date	:NA

(71)**Name of Applicant :**
1)WESTERN REGIONAL INSTRUMENTATION CENTRE
Address of Applicant :WESTERN REGIONAL INSTRUMENTATION CENTRE UNIVERSITY OF MUMBAI, VIDYANAGARI, KALINA, SANTACRUZ (EAST), MUMBAI 400 098 INDIA Maharashtra India
2)INDIAN INSTITUTE OF TECHNOLOGY BOMBAY
(72)**Name of Inventor :**
1)ARORA BRIJ MOHAN
2)NARSALE A M
3)OAK ANAND
4)SHAH HEMA
5)CHITTE GOVIND
6)KUTTY K RAMAN

(57) Abstract :
The present invention relates to novel Integrated Apparatus for Education of Solar Cells. The present invention more particularly comprises the apparatus with temperature control and to measure temperature dependence of open circuit voltage Voc and short circuit current Isc-Neutral density light attenuators are provided-to vary the light intensity. Solar cells are connected in series or in parallel to measure changes in voltage and current of combinations of cells, i) A solar cell is large area diode is seen by measurement, of current-voltage characteristics in dark and under illumination using 4 quadrant power supply, ii) solar cell is source of power by measuring current-voltage characteristics under illumination. From i) and ii) we get VOC- ISC, maximum power point MPP. and fill factor FF. By knowing the intensity of the light incident on the cell, efficiency of the cell can be obtained.

No. of Pages : 17 No. of Claims : 17

(12) PATENT APPLICATION PUBLICATION
(21) Application No.3720/MUM/2011 A
(19) INDIA
(22) Date of filing of Application :30/12/2011
(43) Publication Date : 05/07/2013

(54) Title of the invention : SEALANT DISPENSING SYSTEM

(51) International classification	:A61M 5/28
(31) Priority Document No	:NA
(32) Priority Date	:NA
(33) Name of priority country	:NA
(86) International Application No	:NA
Filing Date	:NA
(87) International Publication No	:N/A
(61) Patent of Addition to Application Number	:NA
Filing Date	:NA
(62) Divisional to Application Number	:NA
Filing Date	:NA

(71)**Name of Applicant :**
1)TATA MOTORS LIMITED
Address of Applicant :BOMBAY HOUSE, 24 HOMI MODY STREET, HUTATMA CHOWK, MUMBAI-400001, MAHARASHTRA, INDIA.
(72)**Name of Inventor :**
1)VIVEK GUPTA
2)YOGESH EKNATH BORKAR
3)K. RAMAKRISHNAN IYER

(57) Abstract :
Sealant Dispensing System The invention relates a sealant dispensing system for an industrial robot having a forearm, a first wrist member rotatably joined to said forearm, and a second wrist member rotatably joined to said first wrist member. The sealant dispensing system includes a doser assembly capable of storing pressurized sealant; a doser assembly mounting connected to said first wrist member, and configured to carry said doser assembly; a distributer block carried by said forearm; a sealant gun connected to said forearm; and at least one sealant hose extending from said doser assembly and connected to said distributer block. The at least one sealant hose is configured to carry sealant from said doser assembly. The sealant dispensing system further includes at least one sealant distributer hose connected to said distributer block and said sealant gun. The at least one sealant distributer hose is configured to transport said sealant from said distributer block to said sealant gun.

No. of Pages : 15 No. of Claims : 9

(12) PATENT APPLICATION PUBLICATION
(19) INDIA
(22) Date of filing of Application :30/12/2011
(21) Application No.3721/MUM/2011 A
(43) Publication Date : 05/07/2013

(54) Title of the invention : A NEUTRAL POSITION SENSING SYSTEM

(51) International classification	:B62D 5/09
(31) Priority Document No	:NA
(32) Priority Date	:NA
(33) Name of priority country	:NA
(86) International Application No	:NA
Filing Date	:NA
(87) International Publication No	:N/A
(61) Patent of Addition to Application Number	:NA
Filing Date	:NA
(62) Divisional to Application Number	:NA
Filing Date	:NA

(71)**Name of Applicant :**
1)TATA MOTORS LIMITED
Address of Applicant :BOMBAY HOUSE, 24 HOMI MODY STREET, HUTATMA CHOWK, MUMBAI-400001, MAHARASHTRA, INDIA.
(72)**Name of Inventor :**
1)PATEL HIRALKUMAR G

(57) Abstract :
The invention relates to a neutral position sensing system for a transmission system having a top cover assembly and a shifter shaft passing through the top cover assembly. The neutral position sensing system includes a shift finger extending from the shifter shaft, a magnetic member mounted on said shift finger and configured to move with said shifter shaft, a breather assembly carried by the top cover assembly inline with the magnetic member and a sensor is integrated with said breather assembly.

No. of Pages : 16 No. of Claims : 9

(12) PATENT APPLICATION PUBLICATION
(19) INDIA
(22) Date of filing of Application :27/12/2011
(21) Application No.3675/MUM/2011 A
(43) Publication Date : 05/07/2013

(54) Title of the invention : A SYSTEM AND METHOD FOR ONLINE USER ASSISTANCE

(51) International classification	:G06F 15/00
(31) Priority Document No	:NA
(32) Priority Date	:NA
(33) Name of priority country	:NA
(86) International Application No	:NA
Filing Date	:NA
(87) International Publication No	:N/A
(61) Patent of Addition to Application Number	:NA
Filing Date	:NA
(62) Divisional to Application Number	:NA
Filing Date	:NA

(71)**Name of Applicant :**
1)TATA CONSULTANCY SERVICES LIMITED
Address of Applicant :NIRMAL BUILDING, 9TH FLOOR, NARIMAN POINT, MUMBAI 400021, MAHARASHTRA, INDIA.
(72)**Name of Inventor :**
1)PATRI, VINAY KUMAR
2)SARAVANAN, RAJESH

(57) Abstract :
The present invention relates to a system and method for assisting online users through a computer generated human-like animated character. Further, the invention provides the method for enabling the said human-like animated character for intuitively responding to user queries. The present invention provides automated answers of the said user queries by mining the data from a real-time updatable database displayed on the screen or display.

No. of Pages : 27 No. of Claims : 7

(12) PATENT APPLICATION PUBLICATION
(21) Application No.3676/MUM/2011 A
(19) INDIA
(22) Date of filing of Application :27/12/2011
(43) Publication Date : 05/07/2013

(54) Title of the invention : HEAT PIPE BASED AIR-COOLED ABSORBER.

(51) International classification	:F25B 27/02
(31) Priority Document No	:NA
(32) Priority Date	:NA
(33) Name of priority country	:NA
(86) International Application No	:NA
Filing Date	:NA
(87) International Publication No	:N/A
(61) Patent of Addition to Application Number	:NA
Filing Date	:NA
(62) Divisional to Application Number	:NA
Filing Date	:NA

(71)**Name of Applicant :**
1)THERMAX LIMITED
Address of Applicant :D-13, MIDC, R.D. AGA ROAD, CHINCHWAD, PUNE- 411 019, MAHARASHTRA, INDIA
(72)**Name of Inventor :**
1)NAVALE DEVADATTA
2)DESAI RAGHAVENDRA

(57) Abstract :
An air-cooled apparatus (100) is disclosed. The apparatus (100) comprises a reaction chamber (103) for receiving a vapor for condensation or absorption; a plurality of heat pipes (101) for conveying a heat exchanging fluid for extracting heat from the vapor or absorbent solution, wherein a portion of the plurality of heat pipes is disposed within the reaction chamber (103), a heat sink (102) provided in operative communication with the plurality of heat pipes (101) for extracting heat from the heat exchange fluid by means of cooling air. The apparatus (100) is simple, compact, provides improved heat transfer efficiency with a, reduced heat transfer area, and prevents accumulation of the non-condensable gases.

No. of Pages : 20 No. of Claims : 10

(12) PATENT APPLICATION PUBLICATION
(19) INDIA
(22) Date of filing of Application :27/12/2011
(21) Application No.3679/MUM/2011 A
(43) Publication Date : 05/07/2013

(54) Title of the invention : A HINGE ASSEMBLY

(51) International classification	:G06F 1/16
(31) Priority Document No	:NA
(32) Priority Date	:NA
(33) Name of priority country	:NA
(86) International Application No	:NA
Filing Date	:NA
(87) International Publication No	:N/A
(61) Patent of Addition to Application Number	:NA
Filing Date	:NA
(62) Divisional to Application Number	:NA
Filing Date	:NA

(71)**Name of Applicant :**
1)LARSEN & TOUBRO LIMITED
Address of Applicant :L&T HOUSE, BALLARD ESTATE, MUMBAI-400001, MAHARASHTRA STATE, INDIA
(72)**Name of Inventor :**
1)ABHISHEK G. KHEDEKAR
2)SUBHASISH NATH

(57) Abstract :
Disclosed herein is a hinge assembly that is designed to solve the problem of hinges known in the prior art. Said problem occurs during opening the cover of deep drawn enclosure by 180°. Said assembly is capable of opening the cover by 180°.

No. of Pages : 8 No. of Claims : 6

(12) PATENT APPLICATION PUBLICATION
(21) Application No.3681/MUM/2011 A
(19) INDIA
(22) Date of filing of Application :28/12/2011
(43) Publication Date : 05/07/2013

(54) Title of the invention : A NANOFLUID BASED HEAT EXCHANGER

(51) International classification	:B21C 9/00
(31) Priority Document No	:NA
(32) Priority Date	:NA
(33) Name of priority country	:NA
(86) International Application No	:NA
Filing Date	:NA
(87) International Publication No	:N/A
(61) Patent of Addition to Application Number	:NA
Filing Date	:NA
(62) Divisional to Application Number	:NA
Filing Date	:NA

(71)**Name of Applicant :**
1)CROMPTON GREAVES LIMITED
Address of Applicant :CROMPTON GREAVES LTD., CG HOUSE, 6TH FLOOR, DR.ANNIE BESANT ROAD, WORLI, MUMBAI-400 030, MAHARASHTRA, INDIA.
(72)**Name of Inventor :**
1)CHAUDHARI SUSHIL EKANATH
2)BHATTACHARYA SUBHENDU

(57) Abstract :
A nanofluid based heat exchanger system adapted to regulate associated transformer temperature, said system comprises: nanofluid cooling system adapted to be coupled with said heat exchanger system for allowing flow of cooled nanofluids into said heat exchanger and for receiving heated nanofluids to be cooled by a compressor, in a feedback loop.

No. of Pages : 12 No. of Claims : 7

(12) PATENT APPLICATION PUBLICATION
(21) Application No.3682/MUM/2011 A
(19) INDIA
(22) Date of filing of Application :28/12/2011
(43) Publication Date : 05/07/2013

(54) Title of the invention : IMPROVED INSULATION ARRANGEMENT FOR SANDWICHED TYPE WINDINGS

(51) International classification	:H02K 3/34
(31) Priority Document No	:NA
(32) Priority Date	:NA
(33) Name of priority country	:NA
(86) International Application No	:NA
Filing Date	:NA
(87) International Publication No	:N/A
(61) Patent of Addition to Application Number	:NA
Filing Date	:NA
(62) Divisional to Application Number	:NA
Filing Date	:NA

(71)**Name of Applicant :**
1)CROMPTON GREAVES LIMITED
Address of Applicant :CROMPTON GREAVES LTD., CG HOUSE, 6TH FLOOR, DR.ANNIE BESANT ROAD, WORLI, MUMBAI-400 030, MAHARASHTRA, INDIA.
(72)**Name of Inventor :**
1)PATIL SHUBHANGI

(57) Abstract :
An improved insulation arrangement for sandwiched type windings in a shunt reactor comprising: a. a main winding wound concentrically over a central portion of the central limb; b. a pair of auxiliary windings connected in series and wound concentrically over the respective end portions of said central limb and electrically insulated therefrom such that said main winding remains disposed between said pair of auxiliary windings along the length of said central limb; c. layers of washers/ wraps dividing the total oil gap in said shunt reactor; and d. at least one thin layer of washer of higher permittivity material which helps to improve the breakdown strength and lowers the stress level at larger oil gap area.

No. of Pages : 22 No. of Claims : 12

(12) PATENT APPLICATION PUBLICATION
(19) INDIA
(22) Date of filing of Application :11/10/2011
(21) Application No.2871/MUM/2011 A
(43) Publication Date : 05/07/2013

(54) Title of the invention : POLYGONAL HUB FOR FULLY FLOATING REAR DRIVE AXLE OF A VEHICLE

(51) International classification	:F16D 41/00
(31) Priority Document No	:NA
(32) Priority Date	:NA
(33) Name of priority country	:NA
(86) International Application No	:NA
Filing Date	:NA
(87) International Publication No	:N/A
(61) Patent of Addition to Application Number	:NA
Filing Date	:NA
(62) Divisional to Application Number	:NA
Filing Date	:NA

(71)**Name of Applicant :**
1)MAHINDRA NAVISTAR AUTOMOTIVES LIMITED
Address of Applicant :MAHINDRA TOWERS, 3rd FLOOR, G.M. BHOSALE MARG, WORLI, MUMBAI-400 018, MAHARASHTRA, INDIA.
(72)**Name of Inventor :**
1)SAWANT, ARVIND HANAMANT

(57) Abstract :
The invention relates to polygonal hub for fully floating rear drive axle of a vehicle used in the break drum and wheel assembly comprising a hub (4) which rotates on the supporting member (10) of axle drive shaft assembled with inner bearing (5) and outer bearing (7) in the in the housing therein to enable rotate freely about an axis and are fixed in position with the said member (10); the complete wheel end assembly is then packed with lock nut (12). The said hub having a flange (15) carries wheel bolt (2) which provides seating for brake drum (1) and wheel rim and tightened with the use of wheel nut (3). The said hub (4) is formed by casting having central portion (17), which is the main portion of hub (4). The invention involves providing hexagonal shape to the central portion instead of circular shape of said hub. This makes hub 10% more strength to carry the various loads (i.e. vehicle GVW, cornering, braking & torque load) during different operating conditions of the wheel. Further a small hexagon formed on the each side of the said central hexagonal hub at outer half section peripheral. The said small hexagon outer half section of the peripheral intersects with central hexagon (17). The inner half portion of the hexagon (18) merges with central hexagon section (17). The intersecting hexagon edge (21) is so arranged that the two sides of the said small hexagon are parallel to central hexagon from two sides (22) respectively. The smaller hexagon (18) joins the central hexagon (17) with hub flange (15), giving the required strength and stiffness as shown

No. of Pages : 21 No. of Claims : 2

(12) PATENT APPLICATION PUBLICATION
(19) INDIA
(22) Date of filing of Application :11/10/2011
(21) Application No.2876/MUM/2011 A
(43) Publication Date : 05/07/2013

(54) Title of the invention : A WATER TREATMENT SYSTEM AND METHOD THEREOF FOR TREATING WASTE WATER FROM DYEING UNITS

(51) International classification	:C02F 1/44
(31) Priority Document No	:NA
(32) Priority Date	:NA
(33) Name of priority country	:NA
(86) International Application No	:NA
Filing Date	:NA
(87) International Publication No	:N/A
(61) Patent of Addition to Application Number	:NA
Filing Date	:NA
(62) Divisional to Application Number	:NA
Filing Date	:NA

(71)**Name of Applicant :**
1)DESHMUKH PRASANNA
Address of Applicant :P - 4/5,INFORMATION TECHNOLOGY PARK,MIDC, SATARA-415 004 MAHARASHTRA, INDIA.
(72)**Name of Inventor :**
1)DESHMUKH PRASANNA

(57) Abstract :
A system for treating wastewater from textile/dyeing units a method thereof are disclosed. The system (100) comprises an electrolytic reactor (108) for removing the organic contaminants, dyes, and salts from the wastewater by electrolysis and a demineralization unit (120) for removing the inorganic salts. The system (100) produces very little sludge and gives clear processed water which can be reused in the industry or dyeing process.

No. of Pages : 21 No. of Claims : 13

(12) PATENT APPLICATION PUBLICATION
(21) Application No.2877/MUM/2011 A
(19) INDIA
(22) Date of filing of Application :11/10/2011
(43) Publication Date : 05/07/2013

(54) Title of the invention : BIODEGRADABLE PVC FILM FOR PHARMACEUTICAL PACKAGING AND A PROCESS FOR ITS PREPARATION

(51) International classification	:A61K 31/00
(31) Priority Document No	:NA
(32) Priority Date	:NA
(33) Name of priority country	:NA
(86) International Application No	:NA
Filing Date	:NA
(87) International Publication No	:N/A
(61) Patent of Addition to Application Number	:NA
Filing Date	:NA
(62) Divisional to Application Number	:NA
Filing Date	:NA

(71)**Name of Applicant :**
1)BILCARE LIMITED
Address of Applicant :601, ICC TRADE TOWER, PUNE-411016, MAHARASHTRA, INDIA,
(72)**Name of Inventor :**
1)KLAUS WILHELM MORR
2)MARCO PIFFERI
3)AJITH SASHIDHARAN NAIR
4)NAIK PRAFUL

(57) Abstract :
The present disclosure relates to a process for preparing a bio-degradable PVC based pharmaceutical grade thermo-formable film. The said film is stable in aerobic conditions and is bio-degradable under anaerobic conditions. The bio-degradable PVC based pharmaceutical grade film has application in the blister packing of pharmaceutical formulations.

No. of Pages : 63 No. of Claims : 24

(12) PATENT APPLICATION PUBLICATION
(21) Application No.13/MUM/2012 A
(19) INDIA
(22) Date of filing of Application :02/01/2012
(43) Publication Date : 05/07/2013

(54) Title of the invention : ROTOR WITH UNIFIED O-BAR SHORTING ASSEMBLY

(51) International classification	:F04C 13/00
(31) Priority Document No	:NA
(32) Priority Date	:NA
(33) Name of priority country	:NA
(86) International Application No	:NA
Filing Date	:NA
(87) International Publication No	:N/A
(61) Patent of Addition to Application Number	:NA
Filing Date	:NA
(62) Divisional to Application Number	:NA
Filing Date	:NA

(71)**Name of Applicant :**
1)CROMPTON GREAVES LIMITED
Address of Applicant :CROMPTON GREAVES LTD., CG HOUSE, 6TH FLOOR, DR.ANNIE BESANT ROAD, WORLI, MUMBAI-400 030, MAHARASHTRA, INDIA.
(72)**Name of Inventor :**
1)PANDYA ANKIT
2)UPADHYAY AMARENDRA

(57) Abstract :
A rotor comprising a rotor body with longitudinal slots which open at its axial ends, said rotor comprises: a plurality of substantially rectangular strips, having two side arms (bars), of metal with rounded corners to provide unified O-bars, each of said arms being fitted into said slots, such that, each slot receives two arms corresponding to adjacent O-bars.

No. of Pages : 17 No. of Claims : 5

(12) PATENT APPLICATION PUBLICATION
(19) INDIA
(22) Date of filing of Application :29/12/2011
(21) Application No.3709/MUM/2011 A
(43) Publication Date : 05/07/2013

(54) Title of the invention : AN AIR VENT OF A HEATING VENTILATION AND AIR CONDITIONING SYSTEM•

(51) International classification	:B60H 3/06
(31) Priority Document No	:NA
(32) Priority Date	:NA
(33) Name of priority country	:NA
(86) International Application No	:NA
Filing Date	:NA
(87) International Publication No	: NA
(61) Patent of Addition to Application Number	:NA
Filing Date	:NA
(62) Divisional to Application Number	:NA
Filing Date	:NA

(71)**Name of Applicant :**
1)TATA MOTORS LIMITED
Address of Applicant :Bombay House 24 Homi Mody Street Hutatma Chowk Mumbai 400 001 Maharashtra INDIA
(72)**Name of Inventor :**
1)ABHISHEK GUPTA
2)CHANDRAKANT P. BHAVSAR
3)SYED MOHAMMED TAUSIF

(57) Abstract :
The present disclosure provides an air vent of a HVAC system and a method for directing air to a particular direction. The air vent comprises of an outer housing and an inner housing. The outer housing is connected to an opening of an air duct and the inner housing is mounted inside the outer housing such that the inner housing easily moves inside the inner housing. The inner housing comprises a fan element which is mounted on a shaft, wherein the shaft is connected to one end of the inner housing. The inner housing also comprises of a knob projecting from other end of the inner housing. The fan element directs air in a predetermined direction based on position of the inner housing wherein the position of the inner housing is changed using the knob.

No. of Pages : 16 No. of Claims : 5

(12) PATENT APPLICATION PUBLICATION
(21) Application No.3714/MUM/2011 A
(19) INDIA
(22) Date of filing of Application :30/12/2011
(43) Publication Date : 05/07/2013

(54) Title of the invention : A METHOD FOR MANUFACTURING OF HOLLOW SHAFTS

(51) International classification	:B23K 20/12
(31) Priority Document No	:NA
(32) Priority Date	:NA
(33) Name of priority country	:NA
(86) International Application No	:NA
Filing Date	:NA
(87) International Publication No	:N/A
(61) Patent of Addition to Application Number	:NA
Filing Date	:NA
(62) Divisional to Application Number	:NA
Filing Date	:NA

(71)**Name of Applicant :**
1)BHARAT FORGE LIMITED
Address of Applicant :MUNDHWA, PUNE CANTONMENT,PUNE-411036, MAHARASHTRA, INDIA
(72)**Name of Inventor :**
1)MR. BABASAHEB NEELKANTH KALYANI

(57) Abstract :
The present invention describes a method of manufacturing a near-net shaped hollow shaft useful for high power applications such as gearboxes for wind energy industry. The method involves providing a concast bloom (of a round or rectangular or of any polygonal cross section) or an as-cast round ingot from which a hollow preform is prepared using hollow die punching, followed by process of heat treatment, proof-machining and stress relieving.

No. of Pages : 30 No. of Claims : 7

(12) PATENT APPLICATION PUBLICATION
(21) Application No.3611/MUM/2011 A
(19) INDIA
(22) Date of filing of Application :22/12/2011
(43) Publication Date : 05/07/2013

(54) Title of the invention : MULTI DISPLAY SIGN BOARD WITH BACK-LIT SYSTEM

(51) International classification	:G02F 1/1343
(31) Priority Document No	:NA
(32) Priority Date	:NA
(33) Name of priority country	:NA
(86) International Application No	:NA
Filing Date	:NA
(87) International Publication No	:N/A
(61) Patent of Addition to Application Number	:NA
Filing Date	:NA
(62) Divisional to Application Number	:NA
Filing Date	:NA

(71)**Name of Applicant :**
1)KAVIT N. VADGAMA
Address of Applicant :37, SHANTI PARK, SOCIETY, BEHIND ABHAYNAGAR GORWA VODADARA - 390016, GUJARAT India
(72)**Name of Inventor :**
1)KAVIT N. VADGAMA

(57) Abstract :
A display having plurality of triangular display elements each having three display surfaces rotatably mounted therein, each of the plurality of triangular display including adjacent longitudinally extending side surfaces so that each set of associated side surfaces of the triangular display provides a display when rotated to a side by side position defining a permanently recurring sequence with the number of displays corresponding to the number of side surfaces on each triangular display elements. Each triangular display elements, is provided with a bearing means at top end and stub shaft at bottom end thereof to rotate the display there between. A drive motor and a transmission in design of worm gear and worm rail rotate the prisms synchronously, the drive motor being connected to horizontally mount driven shaft.

No. of Pages : 22 No. of Claims : 8

(12) PATENT APPLICATION PUBLICATION
(19) INDIA
(22) Date of filing of Application :28/12/2011
(21) Application No.3683/MUM/2011 A
(43) Publication Date : 05/07/2013

(54) Title of the invention : REMOVABLE FILTRATION DEVICE, PARTICULARLY FOR A CONTAINER SUCH AS A BOTTLE

(51) International classification	:C02F 1/00
(31) Priority Document No	:NA
(32) Priority Date	:NA
(33) Name of priority country	:NA
(86) International Application No	:NA
Filing Date	:NA
(87) International Publication No	:N/A
(61) Patent of Addition to Application Number	:NA
Filing Date	:NA
(62) Divisional to Application Number	:NA
Filing Date	:NA

(71)**Name of Applicant :**
1)MARCONI PIERRE PHILIPPE
Address of Applicant :LES HAUTS DE VAUGRENIER 6 ALLEE DES CEDRES 06270 VILLENEUVE-LOUBET FRANCE
(72)**Name of Inventor :**
1)MARCONI PIERRE PHILIPPE

(57) Abstract :
Removable filtration device, particularly for a container such as a bottle. The filtration device comprises a container comprising a lower element (1) and an upper element (2) provided with an evacuation opening (3), the upper element being able to be fixed in a sealed manner on the lower element so as to constitute a closed container. An internal filtration device comprising a reservoir (11) is provided with an opening in its upper portion allowing for its content to flow when the container is tilted toward the left or toward the right. A filter support (12) is adapted to receive in a sealed manner the upper portion of a filter (13) and the reservoir (11). A structural element (14) cooperates with the filter support (12) so as to define an intermediary volume (16) allowing for receiving the liquid after it has flowed through said opening (18), the structural element further comprising a channel for the liquid to flow upward. The internal filtration device is arranged inside the container so as to enable the filtered liquid to be collected after passage through the filter.

No. of Pages : 18 No. of Claims : 10

(12) PATENT APPLICATION PUBLICATION
(21) Application No.3686/MUM/2011 A
(19) INDIA
(22) Date of filing of Application :28/12/2011
(43) Publication Date : 05/07/2013

(54) Title of the invention : AN AUTHENTICATION SYSTEM AND METHOD OF ONLINE CHALLENGE & RESPONSE SOLUTION IN PERSONAL IDENTIFICATION

(51) International classification	:H04L 29/06
(31) Priority Document No	:NA
(32) Priority Date	:NA
(33) Name of priority country	:NA
(86) International Application No	:NA
Filing Date	:NA
(87) International Publication No	:N/A
(61) Patent of Addition to Application Number	:NA
Filing Date	:NA
(62) Divisional to Application Number	:NA
Filing Date	:NA

(71)**Name of Applicant :**
1)TATA CONSULTANCY SERVICES LIMITED
Address of Applicant :NIRMAL BUILDING, 9TH FLOOR, NARIMAN POINT, MUMBAI 400021, MAHARASHTRA, INDIA.
(72)**Name of Inventor :**
1)BIDARE PRASANNA

(57) Abstract :
A system and method for providing challenge-response solutions to authenticate a user have been provided. The system includes web server comprising interlinking means adapted to interlink a plurality of images with unique index values such that each of the images has a unique index value. The web server includes registration means adapted to enable users to select at least two interlinked images for the purpose of registration. The web server includes challenge generation means adapted to generate, transmit an authentication challenge of the form of one-time equation. The web server, prior to transmitting the one-time equation, computes the value of the equation based on at least the sequence specified by the user. The web server compares the value calculated by the user with the value calculated prior to transmission and authenticates the user only in the event that said value calculated by the user is equivalent to the stored value.

No. of Pages : 49 No. of Claims : 19

(12) PATENT APPLICATION PUBLICATION
(19) INDIA
(22) Date of filing of Application :28/12/2011
(21) Application No.3689/MUM/2011 A
(43) Publication Date : 05/07/2013

(54) Title of the invention : TEST DESIGN AUTOMATION

(51) International classification	:G06F 9/44
(31) Priority Document No	:NA
(32) Priority Date	:NA
(33) Name of priority country	:NA
(86) International Application No	:NA
Filing Date	:NA
(87) International Publication No	: NA
(61) Patent of Addition to Application Number	:NA
Filing Date	:NA
(62) Divisional to Application Number	:NA
Filing Date	:NA

(71)**Name of Applicant :**
1)TATA CONSULTANCY SERVICES LIMITED
Address of Applicant :Nirmal Building 9th Floor Nariman Point Mumbai Maharashtra Macao(China)
(72)**Name of Inventor :**
1)MADDINENI Rajamohan
2)NARAYANASWAMY Kumaresan

(57) Abstract :
The present subject matter relates to computer implemented systems and methods related to test design automation. In one embodiment, a method of test design automation comprises receiving business requirements. The business requirements comprise at least a process flow diagram (128). Based on the business requirements, a plurality of test scenarios (130-1) is created. Based on the plurality of test scenarios (130-1), a plurality of test cases (132-1) is generated.

No. of Pages : 18 No. of Claims : 10

(12) PATENT APPLICATION PUBLICATION
(19) INDIA
(22) Date of filing of Application :13/12/2011
(21) Application No.3500/MUM/2011 A
(43) Publication Date : 05/07/2013

(54) Title of the invention : AUTOMATED PANIPURI MAKING AND SERVING MACHINE.

(51) International classification :B29C
(31) Priority Document No :NA
(32) Priority Date :NA
(33) Name of priority country :NA
(86) International Application No :NA
Filing Date :NA
(87) International Publication No :N/A
(61) Patent of Addition to Application Number :NA
Filing Date :NA
(62) Divisional to Application Number :NA
Filing Date :NA

(71)**Name of Applicant :**
1)PATEL, PURVESH
Address of Applicant :PLOT NO: 968/1, SECTOR: 7 'C', GANDHINAGAR-382007, GUJARAT, INDIA
2)PATEL, NIRAV
(72)**Name of Inventor :**
1)PATEL, PURVESH
2)PATEL, NIRAV

(57) Abstract :
It's working itself to serve the healthy Pani-Puri to the foodies. Machine has been designed to protect the foodstuff in a healthy condition. There is no involvement of human being to serve the Pani-Puri, and makes Pani-Puri with balanced & quality taste. Design of machine involves electromechanical architecture. It contains few electronics driven hoppers, where Puris, Potato & Chana pulp, masala water has been stored. Puris have been loaded into the hopper, from where it has been pulled out in sequence to make hole in top of the puri. Potato &chana pulp and masala water has been filled methodically into the puri, which can be served to the foodie. Machinery operations, sensing materials and user demands have been interfaced by electrically controller.

No. of Pages : 24 No. of Claims : 12

(12) PATENT APPLICATION PUBLICATION
(21) Application No.12/MUM/2012 A
(19) INDIA
(22) Date of filing of Application :02/01/2012
(43) Publication Date : 05/07/2013

(54) Title of the invention : A MODULAR BRUSH GEAR ASSEMBLY FOR ELECTRICAL ROTATING MACHINES

(51) International classification	:H02K3/14	(71)**Name of Applicant :**
(31) Priority Document No	:NA	**1)CROMPTON GREAVES LIMITED**
(32) Priority Date	:NA	Address of Applicant :CROMPTON GREAVES LTD., CG HOUSE, 6TH FLOOR, DR.ANNIE BESANT ROAD, WORLI, MUMBAI-400 030, MAHARASHTRA, INDIA.
(33) Name of priority country	:NA	
(86) International Application No	:NA	
Filing Date	:NA	(72)**Name of Inventor :**
(87) International Publication No	:N/A	**1)PANDYA ANKIT**
(61) Patent of Addition to Application Number	:NA	**2)UPADHYAY AMARENDRA**
Filing Date	:NA	
(62) Divisional to Application Number	:NA	
Filing Date	:NA	

(57) Abstract :
A modular brush gear assembly for motors having serially aligned box-slots for holding brushes, said assembly comprising: a plurality of contoured assemblies, each contoured assembly having a constant outer peripheral dimension adapted to be in contact with said box-slots of said brush gear assembly and further having different values of inner peripheral dimensions which receive said brushes, the difference in said outer peripheral dimension and said inner peripheral dimension being the width of said contoured assembly, thereby provisioning variable inner peripheral dimensions accounting for different breadths and hence, different box-slot dimensions for different contoured assemblies, correspondingly.

No. of Pages : 16 No. of Claims : 6

(12) PATENT APPLICATION PUBLICATION
(21) Application No.2855/MUM/2011 A
(19) INDIA
(22) Date of filing of Application :07/10/2011
(43) Publication Date : 05/07/2013

(54) Title of the invention : A COST-CONTROLLED HEALTHCARE SYSTEM

(51) International classification	:G06Q 50/22
(31) Priority Document No	:NA
(32) Priority Date	:NA
(33) Name of priority country	:NA
(86) International Application No	:NA
Filing Date	:NA
(87) International Publication No	:N/A
(61) Patent of Addition to Application Number	:NA
Filing Date	:NA
(62) Divisional to Application Number	:NA
Filing Date	:NA

(71)**Name of Applicant :**
1)BIORAD MEDISYS PVT.LTD.
Address of Applicant :213 DAMJI SHAMJI INDUSTRIAL COMPLEX,9 L.B.S.MARG, KURLA (WEST),MUMBAI-400 070,MAHARASHTRA,INDIA
(72)**Name of Inventor :**
1)HEGDE JITENDRA MADHAVA

(57) Abstract :
A cost-controlled healthcare system comprises: first database adapted to store types of tangible utilities required for said healthcare system; second database adapted to store types of intangible utilities required for said healthcare system; third database adapted to be in correlation with said first database and said second database, said third database. comprising data relating to costs of each of said utilities of said first database and said second database; projection means adapted to project confirmed usage of utilities, in terms of numbers per utility, based on data from said first database and / or said second database; bidding mechanism adapted to provide a bidding platform for provider of utilities in order to obtain a best quote for a projected requirement of utilities obtained from said projection means; and cost computation mechanism adapted to compute a controlled cost for healthcare provisioning based on projected usage of each of said utilities and quotes obtained from said bidding mechanism.

No. of Pages : 29 No. of Claims : 34

(12) PATENT APPLICATION PUBLICATION
(21) Application No.15/MUM/2012 A
(19) INDIA
(22) Date of filing of Application :02/01/2012
(43) Publication Date : 05/07/2013

(54) Title of the invention : A SYSTEM, METHOD AND APPARATUS FOR INTEGRAL BACKLIGHT FOR AN AUTOMOTIVE

(51) International classification :B60Q1/00
(31) Priority Document No :NA
(32) Priority Date :NA
(33) Name of priority country :NA
(86) International Application No :NA
Filing Date :NA
(87) International Publication No :N/A
(61) Patent of Addition to Application Number :NA
Filing Date :NA
(62) Divisional to Application Number :NA
Filing Date :NA

(71)**Name of Applicant :**
1)TATA TECHNOLOGIES PTE LIMITED
Address of Applicant :8 SHENTON WAY #19-05 AXA TOWER SINGAPORE - 068811 Singapore
(72)**Name of Inventor :**
1)POWER, KEVIN
2)DAVIES, PETER
3)JONES, TONY

(57) Abstract :
The present disclosure provides an apparatus, a system and a method for a rear windshield for a vehicle, comprising an integral backlight having a combined surface, wherein the combined surface has an internal surface and an external surface, a plurality of illumination source disposed in a predefined pattern over the combined surface, a conductive grid disposed uniformly on the combined surface, and an apparatus capable of receiving signals disposed on the combined surface.

No. of Pages : 15 No. of Claims : 19

(12) PATENT APPLICATION PUBLICATION
(19) INDIA
(22) Date of filing of Application :20/10/2011
(21) Application No.2955/MUM/2011 A
(43) Publication Date : 05/07/2013

(54) Title of the invention : GASIFICATION SYSTEM

(51) International classification	:B01J 7/00
(31) Priority Document No	:NA
(32) Priority Date	:NA
(33) Name of priority country	:NA
(86) International Application No	:NA
Filing Date	:NA
(87) International Publication No	:N/A
(61) Patent of Addition to Application Number	:NA
Filing Date	:NA
(62) Divisional to Application Number	:NA
Filing Date	:NA

(71)**Name of Applicant :**
1)THERMAX LIMITED
Address of Applicant :D-13, MIDC INDUSTRIAL AREA, R.D. AGA ROAD, CHINCHWAD, PUNE - 411 019, MAHARASHTRA, INDIA.
(72)**Name of Inventor :**
1)BASARGEKAR SUDHEER SHYAMRAO

(57) Abstract :
A gasification system is disclosed comprising a combustion chamber assembly and a gasification chamber assembly. The combustion chamber assembly includes a combustion chamber, a firing device and a distributor plate. The firing device is provided in the combustion chamber and facilitates combustion of a first portion of a feedstock and ash from gasification chamber / cyclone separator, fed inside the combustion chamber. The gasification chamber assembly is connected to the combustion chamber assembly for facilitating flow of flue gas generated by combustion of the first portion of the feedstock and ash from gasification chamber / cyclone separator from the combustion chamber to the gasification chamber assembly. The gasification chamber assembly includes a gasification chamber and a distributor plate. The gasification chamber assembly converts the feedstock to syngas by utilizing the flue gases generated by combustion of the first portion of the feedstock and ash from gasification chamber / cyclone separator,from the combustion chamber.

No. of Pages : 18 No. of Claims : 15

(12) PATENT APPLICATION PUBLICATION
(21) Application No.17/MUM/2012 A
(19) INDIA
(22) Date of filing of Application :02/01/2012
(43) Publication Date : 05/07/2013

(54) Title of the invention : A PROCESS FOR CONTROLLING THE PARTICLE SIZE OF ATOVAQUONE

(51) International classification	:C07C 50/32
(31) Priority Document No	:NA
(32) Priority Date	:NA
(33) Name of priority country	:NA
(86) International Application No	:NA
Filing Date	:NA
(87) International Publication No	: NA
(61) Patent of Addition to Application Number	:NA
Filing Date	:NA
(62) Divisional to Application Number	:NA
Filing Date	:NA

(71)**Name of Applicant :**
1)WOCKHARDT LIMITED
Address of Applicant :D-4 MIDC Industrial area Chikalthana Aurangabad - 431210 M.S. India Maharashtra India
(72)**Name of Inventor :**
1)Sinha Rohit Kumar
2)Rafeeq Mohammad
3)Deo Keshav

(57) Abstract :
The present invention provides a chemical process for controlling the particle size of Atovaquone by using acid and base treatment.

No. of Pages : 8 No. of Claims : 6

(12) PATENT APPLICATION PUBLICATION
(19) INDIA
(22) Date of filing of Application :03/01/2012
(21) Application No.18/MUM/2012 A
(43) Publication Date : 05/07/2013

(54) Title of the invention : AN IMPROVED PROCESS FOR THE PREPARATION OF ETORICOXIB FORM-V

(51) International classification :A61K9/00
(31) Priority Document No :NA
(32) Priority Date :NA
(33) Name of priority country :NA
(86) International Application No :NA
Filing Date :NA
(87) International Publication No :N/A
(61) Patent of Addition to Application Number :NA
Filing Date :NA
(62) Divisional to Application Number :NA
Filing Date :NA

(71)**Name of Applicant :**
1)CADILA HEALTHCARE LIMITED
Address of Applicant :ZYDUS TOWER, SATELLITE CROSS ROAD, AHMEDABAD -380 015, GUJARAT, INDIA
(72)**Name of Inventor :**
1)HITKARI, ANURAG
2)BHATT, PRASHANT

(57) Abstract :
The present invention discloses an improved process for the preparation of crystalline Form-V of etoricoxib of Formula (I), The process comprises: (e) providing etoricoxib in known crystalline forms; (f) treating etoricoxib of step (a) with one or more of suitable ester solvents; (g) removing the solvent to obtain etoricoxib; and (h) drying obtained etoricoxib at ambient temperature to obtain crystalline Form-V of etoricoxib.

No. of Pages : 16 No. of Claims : 12

(12) PATENT APPLICATION PUBLICATION
(21) Application No.20/MUM/2012 A
(19) INDIA
(22) Date of filing of Application :03/01/2012
(43) Publication Date : 05/07/2013

(54) Title of the invention : BULLOCK DRAWN TRACTION SPRAYER.

(51) International classification :A01M7/00
(31) Priority Document No :NA
(32) Priority Date :NA
(33) Name of priority country :NA
(86) International Application No :NA
Filing Date :NA
(87) International Publication No :N/A
(61) Patent of Addition to Application Number :NA
Filing Date :NA
(62) Divisional to Application Number :NA
Filing Date :NA

(71)**Name of Applicant :**
1)MARATHWADA KRISHI VIDYYAPEETH, PARBHANI
Address of Applicant :KRISHI NAGAR, PARBHANI 431402 Maharashtra India
(72)**Name of Inventor :**
1)PROF. S.N. SOLANKI

(57) Abstract :
A bullock drawn traction sprayer was designed considering agronomical, functional requirements and physical and economical considerations. The performance of the sprayer was evaluated for different parameters in laboratory and field conditions at 21 kg/cm2 pressure. The total boom discharge is 9.97 lits. / min. and the draft required ranges from 65 to 73 kg and develops the average power 0.69 hp which is within the range of draught pair. The effective field capacity is 1.33 ha/hour with the average speed of 2.53 km / hour with a pair of bullock.

No. of Pages : 10 No. of Claims : 2

(12) PATENT APPLICATION PUBLICATION
(21) Application No.23/MUM/2012 A
(19) INDIA
(22) Date of filing of Application :03/01/2012
(43) Publication Date : 05/07/2013

(54) Title of the invention : A MODULAR BRUSH GEAR ASSEMBLY FOR ELECTRICAL ROTATING MACHINES

(51) International classification	:H02K 11/00
(31) Priority Document No	:NA
(32) Priority Date	:NA
(33) Name of priority country	:NA
(86) International Application No	:NA
Filing Date	:NA
(87) International Publication No	:N/A
(61) Patent of Addition to Application Number	:NA
Filing Date	:NA
(62) Divisional to Application Number	:NA
Filing Date	:NA

(71)**Name of Applicant :**
1)CROMPTON GREAVES LIMITED
Address of Applicant :CROMPTON GREAVES LTD., CG HOUSE, 6TH FLOOR, DR.ANNIE BESANT ROAD, WORLI, MUMBAI-400 030, MAHARASHTRA, INDIA.
(72)**Name of Inventor :**
1)PANDYA ANKIT
2)UPADHYAY AMARENDRA

(57) Abstract :
A modular brush gear assembly for a rotating electrical machine having serially aligned box-slots for holding brushes, said assembly comprises: a first axially mounted lever mechanism adapted to provide operative inward and operative outward movement to at least a first wall which defines the breadth-wise pocket size of the box-slot of the brush gear assembly; a second axially mounted lever mechanism adapted to provide operative inward and operative outward movement to at least a second wall which defines the length-wise pocket size of the box-slot of the brush gear assembly, thereby provisioning variable inner peripheral dimensions accounting for different breadths and hence, different box-slot dimensions for different contoured assemblies, correspondingly.

No. of Pages : 15 No. of Claims : 14

(12) PATENT APPLICATION PUBLICATION
(21) Application No.14/MUM/2012 A
(19) INDIA
(22) Date of filing of Application :02/01/2012
(43) Publication Date : 05/07/2013

(54) Title of the invention : BLISTER STRIP PICKUP MECHANISM FOR A BLISTER PACKING MACHINE

(51) International classification	:B65B 5/10
(31) Priority Document No	:NA
(32) Priority Date	:NA
(33) Name of priority country	:NA
(86) International Application No	:NA
Filing Date	:NA
(87) International Publication No	:N/A
(61) Patent of Addition to Application Number	:NA
Filing Date	:NA
(62) Divisional to Application Number	:NA
Filing Date	:NA

(71)**Name of Applicant :**
1)SCI-TECH CENTRE
Address of Applicant :7 PRABHAT NAGAR, JOGESHWARI WEST, MUMBAI 400021, MAHARASHTRA, INDIA
(72)**Name of Inventor :**
1)HANJI BHARAMA
2)SINGH JASJIT

(57) Abstract :
Blister strip pickup mechanism for a blister packing machine. The pickup mechanism (1) is comprised of a driven shaft (2) disposed for rotation about a horizontal axis in the proximity of the blister strip punching station of the machine. A cylindrical support block (3) mounted at the one end of the driven shaft defines four radial lines (3b, 3c, 3d and 3e) at radial distances of 90° with respect to one another. Four pairs of rotary support pins (4,4) are rotatably held in the support block circumferentially spaced apart from one another. Each pair of support pins are located at opposite sides of a radial line on the support block at a radial distance of 45° with respect to the radial line. Four pairs of drive gears (5,5) are in mesh with each other and are mounted at the inner ends of each pair of support pins projecting out inwardly from the inner surface (3g) of the support block. A stationary guide and counter balancing hollow cylindrical member (6) supported on the machine frame has a thoothed inner circumference (7) disposed over the drive gears in mesh with the drive gears. Four sucker arms (11) are disposed perpendicular to the outer surface (3h) of the support block in a circular configuration at radial distances of 90° with respect to the outer surface of the support block. The sucker arms are connected to the outer ends of each pair of rotary support pins projecting out outwardly from the outer surface of the support block through a radially reciprocating means (10). Each of the sucker arms has a row of spaced apart vacuum cups (12) along the length thereof corresponding to the width of the blister strips and connected to air and vacuum supplies controlled by the PLC controlling the operations of the machine. The pickup mechanism is simple in construction, compact and cost effective. It increases productivity and is reliable. It also eliminates jerks and vibrations and ensures smooth operation.

No. of Pages : 27 No. of Claims : 7

(12) PATENT APPLICATION PUBLICATION
(19) INDIA
(22) Date of filing of Application :02/01/2012
(21) Application No.2/CHE/2012 A
(43) Publication Date : 05/07/2013

(54) Title of the invention : A PROCESS FOR PREPARATION OF LOPINAVIR

(51) International classification :C07K
(31) Priority Document No :NA
(32) Priority Date :NA
(33) Name of priority country :NA
(86) International Application No :NA
Filing Date :NA
(87) International Publication No : NA
(61) Patent of Addition to Application Number :NA
Filing Date :NA
(62) Divisional to Application Number :NA
Filing Date :NA

(71)**Name of Applicant :**
1)SEQUENT SCIENTIFIC LIMITED
Address of Applicant :STAR-II, OPP. TO INDIAN INSTITUTE OF MANAGEMENT, BANNERGHATTA ROAD, BANGALORE - 560 076 Karnataka India
(72)**Name of Inventor :**
1)VENKATRAMANA, SUMANGALA
2)KAYARMAR, RESHMA
3)MADATHIL, VIJESH ALANTHATTA
4)PATGAR, PRASAD NARASIMHA
5)SHIVALINGAPPA, MANJUNATHA
6)ARULMOLI, THANGAVEL
7)VASUDEVA, PEJAKALA KAKRANNAYA

(57) Abstract :
The present invention discloses a novel a process for the preparation of (2S,3S,5S)-2-(2,6-dimethylphenoxyacetyl)-amino-3-hydroxy-5-(2-(I-tetrahydropyrimid-2-onyl)-3-methylbutanoyl)-amino-l,6-diphenylhexane of formula I comprising condensing N-[(lS,2S,4S)-4-amino-2-hydroxy-5-phenyl-l-(phenylmethyl)pentyl]-2-(2,6-dimethylphenoxy)acetamide and (2R)-3-methyl-2-(2-oxotetrahydropyrimidin-l (2H)-yl)butanoicacid in presence of 4-dimethylaminopyridine, dicyclohexylcarbodiimide (DCC) and in absence of 1-hydroxybenzotriazole (HOBt).

No. of Pages : 7 No. of Claims : 3

(12) PATENT APPLICATION PUBLICATION
(21) Application No.20/CHE/2012 A
(19) INDIA
(22) Date of filing of Application :02/01/2012
(43) Publication Date : 05/07/2013

(54) Title of the invention : AN INTERNAL COMBUSTION ENGINE

(51) International classification :F02D
(31) Priority Document No :NA
(32) Priority Date :NA
(33) Name of priority country :NA
(86) International Application No :NA
Filing Date :NA
(87) International Publication No : NA
(61) Patent of Addition to Application Number :NA
Filing Date :NA
(62) Divisional to Application Number :NA
Filing Date :NA

(71)**Name of Applicant :**
1)BAJAJ AUTO LIMITED
Address of Applicant :2ND & 3RD FLOOR, KHIVRAJ BUILDING, NO.616, ANNASALAI, CHENNAI - 600 006 Tamil Nadu India
(72)**Name of Inventor :**
1)JOSEPH ABRAHAM
2)BHAGWAT VISHWANATH RAMCHANDRA
3)UTPAT SHRIKANT TUKARAM
4)JOSHI ASHISH MOHANIRAJ

(57) Abstract :
An internal combustion engine (100) comprises a cylinder head (119); a cylinder block (117) accommodating an engine cylinder (116) having a cylinder axis (200); a crankshaft (120) having an axis (122); and a crankcase structure (101) integrally comprising a crankcase housing portion (140) for accommodating a differential (146). Crankcase structure (101) has two portions (210,211) connected in a plane (C) perpendicular to the crankshaft axis (122) and parallel to the cylinder axis (200). This crankcase structure (101) accommodates crankshaft (120), alternator (170), clutch (172), transmission system (141) and differential (146); and comprises two sections (104,105) substantially defined by a vertical plane (B) containing crankshaft axis, intersecting the crankcase structure (101) A first section (104) of the crankcase structure (101) includes the cylinder block (117) and differential (146), and also includes the crankcase housing portion (140) for accommodating the differential (146) located proximate cylinder block (117) and cylinder head (119). The second section (105) of the crankcase structure (101) accommodates the transmission system (141) and a balancer (160) for driving at least one engine component (180) accommodated in the crankcase structure (101). The engine (100) is compact in design.

No. of Pages : 29 No. of Claims : 24

(12) PATENT APPLICATION PUBLICATION
(21) Application No.2158/CHE/2012 A
(19) INDIA
(22) Date of filing of Application :29/05/2012
(43) Publication Date : 05/07/2013

(54) Title of the invention : HYDRAULIC PRESSURE SUPPLY APPARATUS FOR TRANSMISSION

(51) International classification	:F16H61/40
(31) Priority Document No	:2011-121636
(32) Priority Date	:31/05/2011
(33) Name of priority country	:Japan
(86) International Application No	:NA
Filing Date	:NA
(87) International Publication No	: NA
(61) Patent of Addition to Application Number	:NA
Filing Date	:NA
(62) Divisional to Application Number	:NA
Filing Date	:NA

(71)**Name of Applicant :**
1)HONDA MOTOR CO., LTD.
Address of Applicant :1-1, MINAMI-AOYAMA 2-CHOME, MINATO-KU, TOKYO Japan
(72)**Name of Inventor :**
1)YAGI, NORIYUKI

(57) Abstract :
In an hydraulic pressure supply apparatus for a transmission, it is configured to have a first hydraulic control valve (80x) supplying signal pressure to a pressure regulation port (80dl) of a regulator valve (80d) that regulates discharged pressure discharged from a hydraulic pump (80c) to line pressure; a second hydraulic control valve (80w) regulating the line pressure and supply it to a lockup clutch; a connecting section (80γ) connecting a hydraulic passage (80α) connecting the first hydraulic control valve and the pressure regulation port with a hydraulic passage (80 β) connected to an output port (80w2) of the second hydraulic control valve; and a selecting mechanism (806) installed at the connecting section to select higher pressure between output pressures of the first and second hydraulic control valves such that the selected one acts on the pressure regulation port.

No. of Pages : 36 No. of Claims : 6

(12) PATENT APPLICATION PUBLICATION
(21) Application No.2978/CHENP/2012 A
(19) INDIA
(22) Date of filing of Application :02/04/2012
(43) Publication Date : 05/07/2013

(54) Title of the invention : SERVICE PROCESSOR, INTELLIGENT NETWORK AND METHOD FOR VOICE LISTENING IN INTELLIGENT NETWORK

(51) International classification :H04W4/12,
(31) Priority Document No :200910189084.7
(32) Priority Date :18/12/2009
(33) Name of priority country :China
(86) International Application No :PCT/CN2010/074910
Filing Date :02/07/2010
(87) International Publication No :WO 2010/149113 A1
(61) Patent of Addition to Application Number :NA
Filing Date :NA
(62) Divisional to Application Number :NA
Filing Date :NA

(71)**Name of Applicant :**
1)ZTE CORPORATION
Address of Applicant :ZTE PLAZA, KEJI ROAD SOUTH, HI-TECH INDUSTRIAL PARK, NANSHAN DISTRICT, SHENZHEN, GUANGDONG PROVINCE 518057, P.R. CHINA China
(72)**Name of Inventor :**
1)BING OU
2)HONGYU YU
3)TIANJIAN LAI

(57) Abstract :
The present invention relates to a service processor, comprising a user access module, a user instruction receiving module, an offset playing control module and an offset acquisition module. The user instruction receiving module is used to receive a pause playing instruction sent by a user. The offset playing control module is used to transmit an instruction of suspending playing to a media server according to the pause playing instruction, and receive the offset that has been played currently sent from the media server according to the pause playing instruction. The offset acquisition module is used to calculate the next playing offset according to the offset that has been played currently, so as to make the media server continuously play the voice from the next playing offset according to the continued playing instruction received by the user instruction receiving module. An intelligent network and a method for voice listening in an intelligent network are also disclosed. When the voice playing is paused, the service processor, the intelligent network and the method for voice listening in an intelligent network above mentioned enable the user to keep the current listening time point and continuously listen to the subsequent voice after the something emergency is completed, so as to keep integrality and real-time when listening to the voice.

No. of Pages : 16 No. of Claims : 11

(12) PATENT APPLICATION PUBLICATION
(21) Application No.22/CHE/2012 A
(19) INDIA
(22) Date of filing of Application :02/01/2012
(43) Publication Date : 05/07/2013

(54) Title of the invention : A SLIDER INTEGRATED LOCKING CLIP, A HOUSING FOR AN ELECTRICAL DEVICE AND A METHOD OF ASSEMBLING THE SLIDER INTEGRATED LOCKING CLIP WITH THE HOUSING FOR AN ELECTRICAL DEVICE

(51) International classification :H02B
(31) Priority Document No :NA
(32) Priority Date :NA
(33) Name of priority country :NA
(86) International Application No :NA
Filing Date :NA
(87) International Publication No : NA
(61) Patent of Addition to Application Number :NA
Filing Date :NA
(62) Divisional to Application Number :NA
Filing Date :NA

(71)**Name of Applicant :**
1)SCHNEIDER ELECTRIC INDUSTRIES SAS
Address of Applicant :35, RUE JOSEPH MONIER, F-92500 RUEIL MALMAISON France
(72)**Name of Inventor :**
1)KARTHIK SATHYANARAYANAN

(57) Abstract :
The present invention relates to a integrated locking clip (101), adapted to be inserted into a housing (102) of an din rail mounted electrical device which are already partially riveted, calibrated and tested, comprising a din rail clip (103) and a slider (104). The slider (104) has a free end (105) and an engaging end (106) and is adapted to be inserted into a slider guide (107) provided with the housing (102). The slider (104) has a gripper (108) on its free end (105) for operating the movement of the slider (104) along the slider guide (107), two protruding lugs (109) disposed near the engaging end (106), by means of which the slider (104) gets locked with said housing (102), a recess (110) provided at the proximity of the engaging end (106) of said slider, and a locking hook (111) pivotally provided with the engaging end (106). The open end of the locking hook (111) is adapted to move towards the slider (104) to engage with or disengage from the recess (110) when the slider (104) gets locked with said din rail clip (103) or unlocked from said din rail clip (103), respectively, which prevents the reversibility of the slider. The din rail clip (103) is provided with an engaging head (112) for clip mounting the housing (102) onto the din rail (113), two side guides (114) for guiding said din rail clip (103) within said housing (102), two protruding locking lugs (115), and a resilient member (116) attached at its one end to the outer face (117) of the locking hook (111) and at its other end to the engaging head (112). The present invention also provides a housing (102) for an electrical device to be mounted onto a din rail (113) and a method of assembling the slider integrated locking clip (101) for assembling with a housing (102) for an electrical device which are already partially riveted, calibrated and tested.

No. of Pages : 47 No. of Claims : 23

(12) PATENT APPLICATION PUBLICATION
(21) Application No.2990/CHENP/2012 A
(19) INDIA
(22) Date of filing of Application :02/04/2012
(43) Publication Date : 05/07/2013

(54) Title of the invention : ADVERTISING AVATAR

(51) International classification :G06Q30/00
(31) Priority Document No :12/580,948
(32) Priority Date :16/10/2009
(33) Name of priority country :U.S.A.
(86) International Application No :PCT/US2010/052122
Filing Date :10/10/2010
(87) International Publication No :WO 2011/046848 A3
(61) Patent of Addition to Application Number :NA
Filing Date :NA
(62) Divisional to Application Number :NA
Filing Date :NA

(71)**Name of Applicant :**
1)MICROSOFT CORPORATION
Address of Applicant :ONE MICROSOFT WAY, REDMOND, WASHINGTON 98052-6399 U.S.A.
(72)**Name of Inventor :**
1)DUNN, MELISSA W.
2)COLANDO, ABIGAIL, AMY

(57) Abstract :
An advertising avatar provides an engaging advertising experience. To create an advertising avatar, a user provides information that may be used to target advertisements to the user. The information is stored in a user profile and associated with an avatar ID. Additionally, an avatar image is created for the advertising avatar that is based on information provided by the user. The more information the user provides, the more fully featured the appearance of the avatar image becomes. When an advertisement is to be displayed on a users client device, an advertisement is selected based on information in the user profile. The avatar image for the users advertising avatar may be presented within the advertisement when the advertisement is presented on the users client device. The presence of the avatar image within an advertisement may provide an indication to the user that the advertisement supports user interaction.

No. of Pages : 34 No. of Claims : 15

(12) PATENT APPLICATION PUBLICATION
(19) INDIA
(22) Date of filing of Application :02/04/2012
(21) Application No.2991/CHENP/2012 A
(43) Publication Date : 05/07/2013

(54) Title of the invention : RESOURCE ACCESS BASED ON MULTIPLE CREDENTIALS

(51) International classification :G06F21/20,G06F13/14
(31) Priority Document No :12/582,185
(32) Priority Date :20/10/2009
(33) Name of priority country :U.S.A.
(86) International Application No :PCT/US2010/050278
Filing Date :24/09/2010
(87) International Publication No :WO 2011/049711 A3
(61) Patent of Addition to Application Number :NA
Filing Date :NA
(62) Divisional to Application Number :NA
Filing Date :NA

(71)**Name of Applicant :**
1)MICROSOFT CORPORATION
Address of Applicant :ONE MICROSOFT WAY, REDMOND WASHINTON 98052-6399 U.S.A.
(72)**Name of Inventor :**
1)BARBOUR, MARC R.
2)ELLISON, CARL M.
3)HATLELID, KRISTJAN E.
4)SCHNEIDER, JANET L.
5)KASSELMAN, PIETER R.

(57) Abstract :
A collection of multiple user credentials each associated with one of multiple different users is obtained at a device, and one or more of the multiple user credentials are verified. The collection of multiple user credentials is also compared to a threshold combination of user credentials to be satisfied to access the resource, and a determination is made, based on the comparing and the verifying, as to whether access to the resource is permitted. An indication of whether access to the resource by a requesting user is permitted is returned or provided to another device.

No. of Pages : 26 No. of Claims : 15

(12) PATENT APPLICATION PUBLICATION
(21) Application No.3001/CHENP/2012 A
(19) INDIA
(22) Date of filing of Application :02/04/2012
(43) Publication Date : 05/07/2013

(54) Title of the invention : METHOD, DEVICE AND SYSTEM FOR COMPRESSING AND DECOMPRESSING TRANSPARENT IMAGE

(51) International classification :H04N7/26
(31) Priority Document No :200910093701.3
(32) Priority Date :25/09/2009
(33) Name of priority country :China
(86) International Application No :PCT/CN2010/075918
Filing Date :12/08/2010
(87) International Publication No :WO 2011/035658 A1
(61) Patent of Addition to Application Number :NA
Filing Date :NA
(62) Divisional to Application Number :NA
Filing Date :NA

(71)**Name of Applicant :**
1)TENCENT TECHNOLOGY (SHENZHEN) COMPANY LIMITED
Address of Applicant :ROOM 403, EAST BLOCK 2, SEG PARK, ZHENXING ROAD, FUTIAN DISTRICT, SHENZHEN CITY 518044, GUANGDONG PROVINCE, PRC China
(72)**Name of Inventor :**
1)GU, CHENCHEN
2)LIU, JUN
3)HE, JIAN

(57) Abstract :
The present invention discloses a method, device and system for compressing and decompressing a transparent image, which relates to digital image technologies. The method includes: obtaining color channel information and transparent channel information of an original transparent image; performing lossy compression for the color channel information to obtain color channel compression information, and performing lossless compression for the transparent channel information to obtain transparent channel compression information; and synthesizing the color channel compression information and the transparent channel compression information to obtain a compressed transparent image. In the technical solution provided by the examples of the present invention, lossless compression is performed for the transparent channel information of the transparent image, lossy compression is performed for the color channel information of the transparent image, and the transparent channel compression information and the color channel compression information are synthesized according to a specific format. In this way, the redundancy contained in the image information is removed, the compression efficiency of the transparent image is improved, and subjective quality of the image is not obviously influenced.

No. of Pages : 32 No. of Claims : 17

(12) PATENT APPLICATION PUBLICATION
(19) INDIA
(22) Date of filing of Application :02/04/2012
(21) Application No.3002/CHENP/2012 A
(43) Publication Date : 05/07/2013

(54) Title of the invention : FUSE UNIT

(51) International classification :H01H85/044
(31) Priority Document No :2009-230528
(32) Priority Date :02/10/2009
(33) Name of priority country :Japan
(86) International Application No :PCT/JP2010/067700
Filing Date :01/10/2010
(87) International Publication No :WO 2011/040650 A1
(61) Patent of Addition to Application Number :NA
Filing Date :NA
(62) Divisional to Application Number :NA
Filing Date :NA

(71)**Name of Applicant :**
1)YAZAKI CORPORATION
Address of Applicant :4-28, MITA 1-CHOME, MINATO-KU, TOKYO Japan
(72)**Name of Inventor :**
1)KIBUSHI, HIDENORI
2)AOKI, TATSUYA

(57) Abstract :
A fuse unit including a fuse element therein includes a first resin body and a second resin body. The second resin body is connected to the first resin body by a hinge portion and configured to be bended around the hinge portion with respect to the first resin body. A pair of first side walls and a pair of second side walls are provided on the first resin body and the second resin body respectively and extend in a direction intersecting an axis of the bending of the second resin body. A pair of engaging parts are provided at the lock arms provided at the first side walls respectively respectively, and each of which has a first inclined face. A pair of engaged parts are provided at the second side walls respectively, and corresponds to the engaging parts respectively, and each of which has a second inclined face configured to contact the first inclined face in surface contact in a state that the second resin body is bended. The first inclined face and the second inclined face are formed along a direction intersecting a direction of a reaction force by springback of the fuse element caused by the bending of the second resin body.

No. of Pages : 34 No. of Claims : 4

(12) PATENT APPLICATION PUBLICATION
(21) Application No.3003/CHENP/2012 A
(19) INDIA
(22) Date of filing of Application :02/04/2012
(43) Publication Date : 05/07/2013

(54) Title of the invention : ANTIMICROBIAL ACTION PHARMACEUTICAL COMPOSITION FOR PARENTERAL ADMINSTRATION AND ITS' PRODUCTION PROCESS

(51) International classification	:A61K31/545,A61K47/04, A61K9/51,A61P31/04
(31) Priority Document No	:201001449
(32) Priority Date	:13/09/2010
(33) Name of priority country	:Russia
(86) International Application No	:PCT/RU2011/000320
Filing Date	:11/05/2011
(87) International Publication No	:WO/2012/036585
(61) Patent of Addition to Application Number	:NA
Filing Date	:NA
(62) Divisional to Application Number	:NA
Filing Date	:NA

(71)**Name of Applicant :**
1)LIMONOV, VIKTOR LVOVICH
Address of Applicant :RUSSIAN FEDERATION, 121374, MOSCOW Russia
(72)**Name of Inventor :**
1)GAIDUL, KONSTANTIN VALENTINOVICH
2)DUSHKIN, ALEKSANDR VALEREVICH

(57) Abstract :
This invention is related to pharmacology, medicine, veterinary science and pharmaceutical industry. It particularly belongs to production process of original composite antimicrobial preparations for external application, which poses a higher therapeutic efficiency in case of grave infection and inflammatory diseases. Proposed pharmaceutical compositions active agents are betalactam antibiotics and finely dispersed nanostructured silica dioxide with weight ratio from 10:1 to 75:1 respectively. The silica dioxide particles are antibiotic molecules delivery agents into the phagocytes which allows to increase antimicrobial preparations concentration at inflammation areas and considerably decrease microorganisms antibiotic resistance. The mentioned pharmaceutical composition production process includes mixing betalactam antibiotic with finely dispersed nanostructured silica dioxide. Its main difference is that the mentioned substances mixture with weight ratio from 10:1 to 75:1 respectively is being exposed to mechanical processing by impact and abrasive actions until fine powder fraction weight proportion increase (< 5 micron) until it becomes not less than 25%. The received mixture is used for injection preparation.

No. of Pages : 14 No. of Claims : 4

(12) PATENT APPLICATION PUBLICATION
(21) Application No.2033/CHE/2012 A
(19) INDIA
(22) Date of filing of Application :22/05/2012
(43) Publication Date : 05/07/2013

(54) Title of the invention : FUEL TANK WITH IMPROVED CREEP RESISTANCE AND METHOD FOR MANUFACTURING IT

(51) International classification :C08K 5/00
(31) Priority Document No :61/490,054
(32) Priority Date :25/05/2011
(33) Name of priority country :U.S.A.
(86) International Application No :NA
Filing Date :NA
(87) International Publication No : NA
(61) Patent of Addition to Application Number :NA
Filing Date :NA
(62) Divisional to Application Number :NA
Filing Date :NA

(71)**Name of Applicant :**
1)INERGY AUTOMOTIVE SYSTEMS RESEARCH (SOCIETE ANONYME)
Address of Applicant :RUE DE RANSBEEK,310, B-1120 BRUXELLES Belgium
(72)**Name of Inventor :**
1)HILL, DAVID
2)CRIEL, BJORN
3)CUVELIER, VINCENT
4)MCCLEARY, SCOTT

(57) Abstract :
Fuel tank having two opposite wall portions and at least one reinforcing element connecting these two wall portions, said reinforcing element comprising at least two parts linked by at least one rotating link. Method for manufacturing such a tank.

No. of Pages : 20 No. of Claims : 15

(12) PATENT APPLICATION PUBLICATION
(21) Application No.2973/CHENP/2012 A
(19) INDIA
(22) Date of filing of Application :02/04/2012
(43) Publication Date : 05/07/2013

(54) Title of the invention : DICYCLANIL-BASED AQUEOUS SUSPENSION AND NON-AQUEOUS SOLUTION POUR-ON AND SPRAY-ON FORMULATIONS FOR THE PREVENTION AND TREATMENT OF INSECT INFESTATION IN ANIMAL

(51) International classification	:A61K9/10, A61K31/17, A61K9/00
(31) Priority Document No	:61/244,142
(32) Priority Date	:21/09/2009
(33) Name of priority country	:U.S.A.
(86) International Application No	:PCT/US2010/049612
Filing Date	:21/09/2010
(87) International Publication No	:WO/2011/035288
(61) Patent of Addition to Application Number	:NA
Filing Date	:NA
(62) Divisional to Application Number	:NA
Filing Date	:NA

(71)**Name of Applicant :**
1)MERIAL LIMITED
Address of Applicant :3239 SATELLITE BLVD., DULUTH, GEORGIA 30096 U.S.A.
(72)**Name of Inventor :**
1)RAZZAK, MAJID
2)JOHNSON, ALAN
3)GOSWAMI, JITENDRA
4)AWASTHI, ATUL
5)HOLMES, ROBERT

(57) Abstract :
This invention relates to topically active compositions, including pour-on and spray-on formulations, comprising insect growth regulator (IGR) insecticides prepared as aqueous suspension formulations, or as non-aqueous solution formulations, and to the methods of making these formulations, and to methods of using these formulations for the treatment and/or prevention of insect infestation in animals.

No. of Pages : 49 No. of Claims : 12

(12) PATENT APPLICATION PUBLICATION
(21) Application No.2975/CHENP/2012 A
(19) INDIA
(22) Date of filing of Application :02/04/2012
(43) Publication Date : 05/07/2013

(54) Title of the invention : METHOD OF USING A SUSPENSION SMELTING FURNACE, A SUSPENSION SMELTING FURNACE, AND A CONCENTRATE BURNER

(51) International classification	:C22B15/00,C22B5/12,F27D 3/16
(31) Priority Document No	:20096071
(32) Priority Date	:19/10/2009
(33) Name of priority country	:Finland
(86) International Application No	:PCT/FI2010/050811
Filing Date	:19/10/2010
(87) International Publication No	:WO 2011/048264 A1
(61) Patent of Addition to Application Number	:NA
Filing Date	:NA
(62) Divisional to Application Number	:NA
Filing Date	:NA

(71)**Name of Applicant :**
1)OUTOTEC OYJ
Address of Applicant :RIIHITONTUNTIE 7, FI-02200 ESPOO Finland
(72)**Name of Inventor :**
1)SIPILA, JUSSI
2)LAHTINEN, MARKKU
3)BJORKLUND, PETER
4)PELTONIEMI, KAARLE
5)AHOKAINEN, TAPIO
6)PESONEN, LAURI, P.
7)EKLUND, KAJ

(57) Abstract :
The invention relates to a method of using a suspension smelting furnace and to a suspension smelting furnace and to a concentrate burner (4). The concentrate burner (4) comprises a first gas supply device (12) for feeding a first gas (5) into the reaction shaft (2) and a second gas supply device (18) for feeding a second gas (16) into the reaction shaft (2). The first gas supply device (12) comprises a first annular discharge opening (14), which which is arranged concentrically with the mouth (8) of a feeder pipe (7), so that the first annular discharge opening (14) surrounds the feeder pipe (7). The second gas supply device (18) comprises a second annular discharge opening (17), which is arranged concentrically with the mouth (8) of the feeder pipe (7), so that the second annular discharge opening (17) surrounds the feeder pipe (7) opening (14).

No. of Pages : 33 No. of Claims : 48

(12) PATENT APPLICATION PUBLICATION
(19) INDIA
(22) Date of filing of Application :04/04/2012
(21) Application No.3073/CHENP/2012 A
(43) Publication Date : 05/07/2013

(54) Title of the invention : APPARATUS FOR MANUFACTURING MOLTEN METAL

(51) International classification :C21B13/10,C21B13/12,F27B3/02
(31) Priority Document No :2009-234362
(32) Priority Date :08/10/2009
(33) Name of priority country :Japan
(86) International Application No :PCT/JP2010/067791
Filing Date :08/10/2010
(87) International Publication No :WO 2011/043472 A1
(61) Patent of Addition to Application Number :NA
Filing Date :NA
(62) Divisional to Application Number :NA
Filing Date :NA

(71)**Name of Applicant :**
1)KABUSHIKI KAISHA KOBE SEIKO SHO (KOBE STEEL, LTD.)
Address of Applicant :10-26, WAKINOHAMA-CHO 2-CHOME, CHUO-KU, KOBE-SHI, HYOGO 651-8585 Japan
(72)**Name of Inventor :**
1)TETSUMOTO, MASAHIKO

(57) Abstract :
Disclosed is a production device of which secondary-combustion efficiency can be further improved when a molten metal is produced by directly reducing and melting a metal agglomerate raw material layer in an electric heating furnace. Specifically, material charging chutes (4, 4) are disposed at either end portion (2, 2) of a furnace in the width direction of the furnace. Electrodes (5) are disposed in a central region in the furnace width direction. Secondary combustion burners (6) are disposed in an upper portion (1) of the furnace having stepped portions descending from both end portions (2, 2) in the furnace width direction to the electrodes (5). Raw material layers (12) each having a downslope inclined to lower portions of the electrodes (5) are formed in advance by charging a carbonaceous material (A) from the chutes (4, 4), and metal agglomerate raw material layers (13) are formed on the slopes of the raw material layers (12) by charging metal agglomerate raw material (B). Molten iron is produced by sequentially melting lower end portions of the metal agglomerate raw material layers (13) by arc heating at the electrodes (5) . At the same time, an oxygen containing gas (C) is blown from the secondary combustion burners (6) so as to cause the combustion of a CO containing gas generated from the metal agglomerate raw material layers (13) while the metal agglomerate raw material layers (13) descend along the slopes of the raw material layers (12), and the metal agglomerate raw material layers (13) are heated by the radiant heat of the combustion.

No. of Pages : 84 No. of Claims : 20

(12) PATENT APPLICATION PUBLICATION
(19) INDIA
(22) Date of filing of Application :02/01/2012
(21) Application No.28/CHE/2012 A
(43) Publication Date : 05/07/2013

(54) Title of the invention : SYSTEM AND METHOD FOR PROFILING USERS FOR MOBILE ADVERTISEMENTS

(51) International classification :G06Q
(31) Priority Document No :NA
(32) Priority Date :NA
(33) Name of priority country :NA
(86) International Application No :NA
Filing Date :NA
(87) International Publication No : NA
(61) Patent of Addition to Application Number :NA
Filing Date :NA
(62) Divisional to Application Number :NA
Filing Date :NA

(71)**Name of Applicant :**
1)Alcatel Lucent
Address of Applicant :3 avenue Octave Greard 75007 Paris France
(72)**Name of Inventor :**
1)Dinesh Govindaraj
2)Animesh Nandi
3)Ramesh Pattabhiraman
4)Anirban Majumder
5)Samik Datta
6)Sreedal Menon

(57) Abstract :
The embodiments disclosed herein relates to a method and system for profiling users for selective content delivery service. Further Users are profiled based on location call graph and/or demographic data associated with the users. Further the method of place profiling of users in the proposed invention effectively reduces/eliminates possible occurrence of noise in the place profiling process. After profiling the users a targeted content delivery module selects contents matching the profile of each user and delivers selected contents to corresponding user. Further the system maintains a database of locations and corresponding parameters such as signal strength address GPS coordinate Bluetooth ID and so on. When a user device location is to be traced the system obtains cell-Id and signal strength of the device and compares the obtained values with the database so as to obtain a location match for the user device.

No. of Pages : 33 No. of Claims : 14

(12) PATENT APPLICATION PUBLICATION
(21) Application No.3069/CHENP/2012 A
(19) INDIA
(22) Date of filing of Application :04/04/2012
(43) Publication Date : 05/07/2013

(54) Title of the invention : INFORMATION PROCESSING APPARATUS, TUNER, AND INFORMATION PROCESSING METHOD

(51) International classification	:H04N7/173,H04N 5/445
(31) Priority Document No	:2009-249939
(32) Priority Date	:30/10/2009
(33) Name of priority country	:Japan
(86) International Application No	:PCT/JP2010/006354
Filing Date	:27/10/2010
(87) International Publication No	:WO 2011/052200 A1
(61) Patent of Addition to Application Number	:NA
Filing Date	:NA
(62) Divisional to Application Number	:NA
Filing Date	:NA

(71)**Name of Applicant :**
1)SONY COMPUTER ENTERTAINMENT INC.
Address of Applicant :1-7-1 KONAN, MINATO-KU, TOKYO-1080075 Japan
(72)**Name of Inventor :**
1)NISHIZA WA, MANABU
2)KOBAYASHI, YUKI
3)ISHIZUKA, KENSAKU
4)KANAI, KOJI

(57) Abstract :
A data processing device (11) includes a program schedule display unit (88), an index value acquisition unit (68), and a popularity rating determination unit (70). The program schedule display unit (88) displays a program schedule, which includes program information arranged in a region having a time axis and a channel axis, on a display (14). The index value acquisition unit (68) acquires, from an external device, an index value representing the number of viewers watching each of a plurality of programs in the same time slot in the program schedule. The popularity rating determination unit (70) determines the popularity rating of each program according to the index value. The program schedule display unit (88) displays in a mode in which the res-pective popularity ratings for at least some of the plurality of programs are indicated.

No. of Pages : 106 No. of Claims : 12

(12) PATENT APPLICATION PUBLICATION
(21) Application No.3070/CHENP/2012 A
(19) INDIA
(22) Date of filing of Application :04/04/2012
(43) Publication Date : 05/07/2013

(54) Title of the invention : MEDICAMENT DELIVERY DEVICE

(51) International classification	:A61M5/20,A61M 5/315,A61M 5/32,A61M 5/46
(31) Priority Document No	:0950710-4
(32) Priority Date	:30/09/2009
(33) Name of priority country	:Sweden
(86) International Application No	:PCT/SE2010/050940
Filing Date	:03/09/2010
(87) International Publication No	:WO 2011/040861 A1
(61) Patent of Addition to Application Number	:NA
Filing Date	:NA
(62) Divisional to Application Number	:NA
Filing Date	:NA

(71)**Name of Applicant :**
1)SHL GROUP AB
Address of Applicant :P.O. BOX 1240, AUGUSTENDALSVAGEN 19, S-13128, MACKA STRAND Sweden
(72)**Name of Inventor :**
1)BOSTROM, ANDERS

(57) Abstract :
The present invention relates to a medicament delivery device it is characterised by medicament delivery device comprising a generally tubular housing having opposite proximal and distal ends, wherein the housing is provided with a coaxial tubular sleeve extending from its distal end towards the proximal end; a generally tubular medicament delivery member shield coaxially and slidably arranged within the housing, wherein a proximal portion of the tubular medicament delivery member shield protrudes from the proximal end of the housing; a medicament container provided with a medicament delivery member, a chamber containing a medicament, and an axial movable piston; drive means comprising a plunger rod having opposite proximal and distal ends, and a force spring means, wherein the proximal end of the plunger rod is in contact with the piston; wherein the device further comprises a medicament container holder coaxially arranged to the drive means and capable of supporting the medicament container, wherein the medicament container holder comprises a first locking means releasibly connected to corresponding locking means on the coaxial tubular sleeve forming a first locking engagement for holding the medicament container holder in an initial state against a force from the drive means, wherein the medicament delivery member shield is capable of releasing said first locking engagement when the medicament delivery member shield is pressed against a medicament delivery site, whereby said drive means forces said medicament container holder a certain predetermined distance towards the proximal end of [Continued on next page]

No. of Pages : 20 No. of Claims : 12

(12) PATENT APPLICATION PUBLICATION
(21) Application No.2992/CHENP/2012 A
(19) INDIA
(22) Date of filing of Application :02/04/2012
(43) Publication Date : 05/07/2013

(54) Title of the invention : LOW-LATENCY PEER SESSION ESTABLISHMENT

(51) International classification :H04L9/30,H04L9/32
(31) Priority Document No :12/603,401
(32) Priority Date :21/10/2009
(33) Name of priority country :U.S.A.
(86) International Application No :PCT/US2010/050282
Filing Date :24/09/2010
(87) International Publication No :WO 2011/049712 A3
(61) Patent of Addition to Application Number :NA
Filing Date :NA
(62) Divisional to Application Number :NA
Filing Date :NA

(71)**Name of Applicant :**
1)MICROSOFT CORPORATION
Address of Applicant :ONE MICROSOFT WAY, REDMOND WASHINGTON 98052-6399 U.S.A.
(72)**Name of Inventor :**
1)GALVIN, TOM
2)STEERE, DAVID

(57) Abstract :
A source device and a target device may endeavor to form a secure communication session whereby encrypted messages may be transmitted over an untrusted network, such as the internet. However, the exchange of many messages in the establishment of the communication session may involve considerable latency and computational resources, particularly in scenarios featuring many communication sessions (e.g., peer-to-peer communication sessions). Techniques for initiating a communication session may be devised that enables the initiation of a communication session with only two exchanged messages, or even with a single message transmitted from the source device to the target device. Some embodiments of these techniques may also permit the inclusion of advantageous security features, such as authentication via public certificate to detect man-in-the-middle attacks and the inclusion of nonces to detect replay attacks, without increasing the number of messages involved in the initiation of the communication session.

No. of Pages : 43 No. of Claims : 15

(12) PATENT APPLICATION PUBLICATION
(19) INDIA
(22) Date of filing of Application :02/04/2012
(21) Application No.2993/CHENP/2012 A
(43) Publication Date : 05/07/2013

(54) Title of the invention : PRE-FETCHING CONTENT ITEMS BASED ON SOCIAL DISTANCE

(51) International classification :G06F15/16,G06Q50/00
(31) Priority Document No :12/577,464
(32) Priority Date :12/10/2009
(33) Name of priority country :U.S.A.
(86) International Application No :PCT/US2010/052120
Filing Date :10/10/2010
(87) International Publication No :WO 2011/046847 A3
(61) Patent of Addition to Application Number :NA
Filing Date :NA
(62) Divisional to Application Number :NA
Filing Date :NA

(71)**Name of Applicant :**
1)MICROSOFT CORPORATION
Address of Applicant :ONE MICROSOFT WAY, REDMOND WASHINGTON 98052-6399 U.S.A.
(72)**Name of Inventor :**
1)LU, BO
2)MALPANI, RAGHAVENDRA
3)PORKKA, JOSEPH, A.
4)PALISWIAT, BARTOSZ, HENRYK
5)JENSEN, CHRISTIAN, BOGH
6)KUMAR, SUSHIL

(57) Abstract :
Retrieving content items based on a social distance between a user and content providers. The social distance is determined based on, for example, user interaction with the content providers. The content providers are ranked, for the user, based on the determined social distance. Prior to a request from the user, the content items are pre fetched based on the ranked content providers and constraints such as storage space, bandwidth, and battery power level of a computing device of the user. In some embodiments, additional content items are retrieved, or retrieved content items are deleted, as a variable-size cache on the computing device fills or changes size.

No. of Pages : 22 No. of Claims : 15

(12) PATENT APPLICATION PUBLICATION
(21) Application No.2994/CHENP/2012 A
(19) INDIA
(22) Date of filing of Application :02/04/2012
(43) Publication Date : 05/07/2013

(54) Title of the invention : ROUTING USER DATA ENTRIES TO APPLICATIONS

(51) International classification :H04W88/02,G06F9/46
(31) Priority Document No :12/577,400
(32) Priority Date :12/10/2009
(33) Name of priority country :U.S.A.
(86) International Application No :PCT/US2010/052119
Filing Date :10/10/2010
(87) International Publication No :WO 2011/046846 A3
(61) Patent of Addition to Application Number :NA
Filing Date :NA
(62) Divisional to Application Number :NA
Filing Date :NA

(71)**Name of Applicant :**
1)MICROSOFT CORPORATION
Address of Applicant :ONE MICROSOFT WAY, REDMOND, WASHINGTON 98052-6399 U.S.A.
(72)**Name of Inventor :**
1)LIN, HSUAN-YU, JERRY
2)PAN, DAVID T.

(57) Abstract :
A user data entry is received at a mobile communications device. After receiving the user data entry, user selections of a first application and a second application are received. In response to the user selections, the user data entry is routed to both the first application and the second application. Additionally, a list of user data entries can be maintained and displayed, allowing the user to select user data entries from the list and also select an application to which a selected user data entry is to be routed.

No. of Pages : 27 No. of Claims : 15

(12) PATENT APPLICATION PUBLICATION
(21) Application No.3085/CHENP/2012 A
(19) INDIA
(22) Date of filing of Application :04/04/2012
(43) Publication Date : 05/07/2013

(54) Title of the invention : DISPLAY DEVICE, PROGRAM AND COMPUTER READABLE STORAGE MEDIUM ON WHICH SAID PROGRAM IS STORED

(51) International classification :H04N7/173,H04N5/44
(31) Priority Document No :2009-221464
(32) Priority Date :25/09/2009
(33) Name of priority country :Japan
(86) International Application No :PCT/JP2010/066440
Filing Date :22/09/2010
(87) International Publication No :WO 2011/037147 A1
(61) Patent of Addition to Application Number :NA
Filing Date :NA
(62) Divisional to Application Number :NA
Filing Date :NA

(71)**Name of Applicant :**
1)SHARP KABUSHIKI KAISHA
Address of Applicant :22-22, NAGAIKE-CHO, ABENO-KU, OSAKA-SHI, OSAKA 545-8522 Japan
(72)**Name of Inventor :**
1)KOIKE, AKIRA
2)TAKAKU, KOHICHI
3)SHIMIZU, TAKAMASA
4)TAKIGUCHI, MASAHIKO
5)OHYA, AKIYOSHI
6)OGAWA, ATSUSHI
7)HIRATA, KOICHI
8)FUJI, OSAMU

(57) Abstract :
A television receiver 10 for receiving and displaying content with which genre information is associated, including: a basic picture quality information receiving section (41) which associates, with a single piece of genre information, a plurality of candidates for picture quality information indicating picture quality of a display of the content with which the genre information is associated, and which receives basic picture quality information indicating which one of the plurality of candidates for the picture quality information the display of the content is based on; a high-level picture quality correction information creating section (42) which receives picture quality correction information for, by using picture quality based on the basic picture quality information as a benchmark, further correcting the picture quality, and which creates, in accordance with the basic picture quality information and the picture quality correction information, high-level picture quality correction information for correcting the picture quality; and a picture processing section (19) which corrects the picture quality in accordance with the high-level picture quality correction information, and which creates a picture to be displayed by a liquid crystal display device (22).

No. of Pages : 56 No. of Claims : 8

(12) PATENT APPLICATION PUBLICATION
(19) INDIA
(22) Date of filing of Application :04/04/2012
(21) Application No.3087/CHENP/2012 A
(43) Publication Date : 05/07/2013

(54) Title of the invention : LIQUID CRYSTAL DISPLAY DEVICE

(51) International classification :G02F1/13363,G02B5/30
(31) Priority Document No :2009-207543
(32) Priority Date :08/09/2009
(33) Name of priority country :Japan
(86) International Application No :PCT/JP2010/060044
Filing Date :14/06/2010
(87) International Publication No :WO 2011/030596 A1
(61) Patent of Addition to Application Number :NA
Filing Date :NA
(62) Divisional to Application Number :NA
Filing Date :NA

(71)**Name of Applicant :**
1)SHARP KABUSHIKI KAISHA
Address of Applicant :22-22, NAGAIKE-CHO, ABENO-KU, OSAKA-SHI, OSAKA 545-8522 Japan
(72)**Name of Inventor :**
1)ASHIDA, TAKEYUKI
2)SUGIHARA, YASUHIKO

(57) Abstract :
The present invention provides a liquid crystal display device exhibiting an excellent gray scale inversion characteristic in a state where a color close to black is displayed. The present invention is a liquid crystal display device including a first polarizer, a second polarizer disposed to face the first polarizer, a liquid crystal display panel provided between the first polarizer and the second polarizer, and a first phase plate and a second phase plate provided between the first or second polarizer and the liquid crystal display panel. In the liquid crystal display device, the liquid crystal display panel has a pair of substrates disposed to face each other and a liquid crystal layer sandwiched between the pair of substrates, the liquid crystal layer includes a homogeneously aligned liquid crystal molecule, the first phase plate includes a liquid crystal film, the liquid crystal film is formed by being set in a state where a nematic liquid crystal is hybrid-aligned, and a specific phase difference as a phase difference in a perpendicular direction of a member which is present between the first and second polarizers, excluding the liquid crystal layer and the first phase plate, is 120 nm or more.

No. of Pages : 168 No. of Claims : 19

(12) PATENT APPLICATION PUBLICATION
(21) Application No.3088/CHENP/2012 A
(19) INDIA
(22) Date of filing of Application :04/04/2012
(43) Publication Date : 05/07/2013

(54) Title of the invention : PIXEL CIRCUIT AND DISPLAY DEVICE

(51) International classification	:G09G3/36,G02F 1/133,G09G 3/20
(31) Priority Document No	:2009-206474
(32) Priority Date	:07/09/2009
(33) Name of priority country	:Japan
(86) International Application No	:PCT/JP2010/058744
Filing Date	:24/05/2010
(87) International Publication No	:WO 2011/027600 A1
(61) Patent of Addition to Application Number	:NA
Filing Date	:NA
(62) Divisional to Application Number	:NA
Filing Date	:NA

(71)**Name of Applicant :**
1)SHARP KABUSHIKI KAISHA
Address of Applicant :22-22, NAGAIKE-CHO, ABENO-KU, OSAKA-SHI, OSAKA 545-8522 Japan
(72)**Name of Inventor :**
1)YAMAUCHI, YOSHIMITSU

(57) Abstract :
A display device that realizes a reduction in power consumption without causing deterioration of an aperture is provided. A liquid crystal capacitor element (Clc) is formed by being interposed between a pixel electrode (20) and a counter electrode (80). A counter voltage (Vcom) is applied to the counter electrode (80). One terminals of the pixel electrode (20), a first switch circuit (22), and a second switch circuit (23), and a first terminal of a second transistor (T2) form an internal node (Nl). The fist switch circuit (22) and the second switch circuit (23) have other terminals connected to a source line (SL). The second switch circuit (23) is configured by a series circuit of transistors (Tl and T3), and a control terminal of the transistor (Tl), a second terminal of the transistor (T2), and one terminal of a boost capacitor element (Cbst) form an output node (N2). The other terminal of the boost capacitor element (Csbt) is connected to a boost line (BST), the control terminal of the transistor (T2) is connected to a reference line (REF), and the control terminal of the transistor (T3) is connected to a selecting line (SEL).

No. of Pages : 175 No. of Claims : 27

(12) PATENT APPLICATION PUBLICATION
(19) INDIA
(22) Date of filing of Application :04/04/2012
(21) Application No.3089/CHENP/2012 A
(43) Publication Date : 05/07/2013

(54) Title of the invention : HIGHLY CONCENTRATED PHARMACEUTICAL FORMULATIONS COMPRISING ANTI-CD20 ANTIBODY

(51) International classification :A61K9/00
(31) Priority Document No :09170110.2
(32) Priority Date :11/09/2009
(33) Name of priority country :EPO
(86) International Application No :PCT/EP2010/063271
Filing Date :10/09/2010
(87) International Publication No :WO 2011/029892 A3
(61) Patent of Addition to Application Number :NA
Filing Date :NA
(62) Divisional to Application Number :NA
Filing Date :NA

(71)**Name of Applicant :**
1)F. HOFFMANN-LA ROCHE AG
Address of Applicant :124 GRENZACHERSTRASSE, CH-4070 BASEL Switzerland
(72)**Name of Inventor :**
1)ADLER, MICHAEL
2)MAHLER, HANNS-CHRISTIAN
3)STAUCH, OLIVER, BORIS

(57) Abstract :
The present invention relates to a highly concentrated, stable pharmaceutical formulation of a pharmaceutically active anti-CD20 antibody, such as e.g. Rituximab, Ocrelizumab or HuMab<CD20>, or a mixture of such antibody molecules for subcutaneous injection. In particular, the present invention relates to formulations comprising, in addition to a suitable amount of the anti-CD20 antibody, an effective amount of at least one hyaluronidase enzyme as a combined formulation or for use in form of a co-formulation. The said formulations comprise additionally at least one buffering agent, such as e.g. a histidine buffer, a stabilizer or a mixture of two or more stabilizers (e.g. a saccharide, such as e.g. a,a-trehalose dihydrate or sucrose, and optionally methionine as a second stabilizer), a nonionic surfactant and an effective amount of at least one hyaluronidase enzyme. Methods for preparing such formulations and their uses thereof are also provided.

No. of Pages : 84 No. of Claims : 26

(12) PATENT APPLICATION PUBLICATION
(19) INDIA
(22) Date of filing of Application :02/04/2012
(21) Application No.2988/CHENP/2012 A
(43) Publication Date : 05/07/2013

(54) Title of the invention : MOBILE COMMUNICATION SYSTEM

(51) International classification :H04W28/16
(31) Priority Document No :2009-230547
(32) Priority Date :02/10/2009
(33) Name of priority country :Japan
(86) International Application No :PCT/JP2010/005624
Filing Date :15/09/2010
(87) International Publication No :WO 2011/039959 A1
(61) Patent of Addition to Application Number :NA
Filing Date :NA
(62) Divisional to Application Number :NA
Filing Date :NA

(71)**Name of Applicant :**
1)MITSUBISHI ELECTRIC CORPORATION
Address of Applicant :7-3, MARUNOUCHI 2-CHOME, CHIYODA-KU TOKYO 100-8310 Japan
(72)**Name of Inventor :**
1)MAEDA, MIHO
2)MOCHIZUKKI, MITSURU
3)IWANE, YASUSHI
4)KAKEHI, YUJI
5)NAKAZAWA, MASAYUKI
6)SUEMITSU, TAISEI

(57) Abstract :
Disclosed is a mobile communication system including a mobile terminal, a base station which carries out radio communications with the mobile terminal, and an access management device which manages access from the mobile terminal to the base station, which, when an access group comprised of one or more mobile terminals and one or more base stations is registered with the access management device, grants a mobile terminal included in the access group permission to access to a base station included in the same access group. When a predetermined condition is satisfied after a mobile terminal subscribes to the access group in such a way that the mobile terminal is granted permission to temporarily access to the access group during an access permit period, and the access permit period expires, the mobile communication system excludes the mobile terminal for which the access permit period has expired from destinations to which a calling message is transmitted through a base station included in the same access group. As a result, the processing load imposed on the network side can be reduced, and needless use of radio resources can be prevented.

No. of Pages : 195 No. of Claims : 20

(12) PATENT APPLICATION PUBLICATION
(19) INDIA
(22) Date of filing of Application :02/04/2012
(21) Application No.2989/CHENP/2012 A
(43) Publication Date : 05/07/2013

(54) Title of the invention : VIRAL DISTRIBUTION AND TRACKING OF ELECTRONIC COUPONS

(51) International classification :G06Q30/00
(31) Priority Document No :12/580,731
(32) Priority Date :16/10/2009
(33) Name of priority country :U.S.A.
(86) International Application No :PCT/US2010/052124
Filing Date :11/10/2010
(87) International Publication No :WO 2011/046849 A3
(61) Patent of Addition to Application Number :NA
Filing Date :NA
(62) Divisional to Application Number :NA
Filing Date :NA

(71)**Name of Applicant :**
1)MICROSOFT CORPORATION
Address of Applicant :ONE MICROSOFT WAY, REDMONDF WASHINGTON 98052-6399 U.S.A.
(72)**Name of Inventor :**
1)GUDAY, SHAI
2)ABEL, MILLER, THOMAS

(57) Abstract :
Distributing and tracking electronic coupons based on proximity. Upon detecting recipients proximate to a computing device, one or more electronic coupons are selected and transmitted to the detected recipients. The transmittal occurs via a wireless connection in some embodiments. Coupon properties associated with the transmitted coupons are adjusted (e.g., values decreased, expiration conditions modified, location of transmittal, etc.). Distribution data for the transmitted coupons is stored to maintain a distribution history.

No. of Pages : 21 No. of Claims : 15

(12) PATENT APPLICATION PUBLICATION
(21) Application No.3090/CHENP/2012 A
(19) INDIA
(22) Date of filing of Application :04/04/2012
(43) Publication Date : 05/07/2013

(54) Title of the invention : MODULE ARRANGEMENT CONSISTING OF SOLAR MODULES

(51) International classification :F24J2/52
(31) Priority Document No :20 2009 011 880.0
(32) Priority Date :10/09/2009
(33) Name of priority country :Germany
(86) International Application No :PCT/EP2010/063117
Filing Date :07/09/2010
(87) International Publication No :WO 2011/029822 A1
(61) Patent of Addition to Application Number :NA
Filing Date :NA
(62) Divisional to Application Number :NA
Filing Date :NA

(71)**Name of Applicant :**
1)SCHUCO INTERNATIONAL KG
Address of Applicant :KAROLINENSTRASSE 1-15, 33609 BIELEFELD Germany
(72)**Name of Inventor :**
1)SALZER, WADIM

(57) Abstract :
The invention relates to a module arrangement having the following: double module arrangements, each consisting of two solar modules oriented at an angle to each other; wherein the two solar modules (1) of the individual double module arrangements are coupled to each other at least in the region of their opposing upper edges; wherein the two solar modules (1) of each double module arrangement are coupled to each other via one or more connectors (6); wherein the connector (6) for connecting the two modules of a double module arrangement is formed at an angle and has two limbs (11,12) which form an angle a, said angle being between 95° and 175°; wherein one or more profiles (5) are arranged under the solar modules, and in particular under glass-glass thin film laminate modules, said profiles having one or more chambers, wherein adjacent double module arrangements are connected to each other via at least one or more coupling devices, said coupling devices having anti-slip devices (4). The one or more chambers of the profile or profiles (5) is or are designed to secure the connector (6, 7) by receiving said connector (6, 7).

No. of Pages : 34 No. of Claims : 19

(12) PATENT APPLICATION PUBLICATION
(19) INDIA
(22) Date of filing of Application :04/04/2012
(21) Application No.3092/CHENP/2012 A
(43) Publication Date : 05/07/2013

(54) Title of the invention : AIR CONDITIONER

(51) International classification :F24F11/02
(31) Priority Document No :2009-233319
(32) Priority Date :07/10/2009
(33) Name of priority country :Japan
(86) International Application No :PCT/JP2010/005948
Filing Date :05/10/2010
(87) International Publication No :WO 2011/043056 A1
(61) Patent of Addition to Application Number :NA
Filing Date :NA
(62) Divisional to Application Number :NA
Filing Date :NA

(71)**Name of Applicant :**
1)PANASONIC CORPORATION
Address of Applicant :1006, OAZA KADOMA, KADOMA-SHI, OSAKA 571-8501 Japan
(72)**Name of Inventor :**
1)JINNO, YASUSHI
2)SUGIO, TAKASHI
3)TOSHA, TERUO
4)SATO, SATOSHI
5)IWAMOTO, KEIKO
6)TSUJIMURA, SATOSHI

(57) Abstract :
An indoor unit of an air conditioner is provided with an image pickup device that includes a human body detecting means for detecting the presence or absence of a person and an obstacle detecting means for detecting the presence or absence of an obstacle. A wind direction changing means mounted to the indoor unit is controlled based on a detection signal of the human body detecting means and that of the obstacle detecting means. When the air conditioner is not in operation, the image pickup device is covered with a portion of the indoor unit. The image pickup device is designed to face in the same direction at the start of operation of the air conditioner.

No. of Pages : 100 No. of Claims : 6

(12) PATENT APPLICATION PUBLICATION
(19) INDIA
(22) Date of filing of Application :04/08/2011
(21) Application No.2667/CHE/2011 A
(43) Publication Date : 05/07/2013

(54) Title of the invention : PREPARATION OF ESLICARBAZEPINE ACETATE

(51) International classification :A61K
(31) Priority Document No :NA
(32) Priority Date :NA
(33) Name of priority country :NA
(86) International Application No :NA
Filing Date :NA
(87) International Publication No : NA
(61) Patent of Addition to Application Number :NA
Filing Date :NA
(62) Divisional to Application Number :NA
Filing Date :NA

(71)**Name of Applicant :**
1)Dr. Reddys Laboratories Limited
Address of Applicant :8-2-337 Road No. 3 Banjara hills Hyderabad 500034 Andhra Pradesh India Tamil Nadu India
2)Dr. Reddys Laboratories Inc.
(72)**Name of Inventor :**
1)Katkam Srinivas
2)Sagyam Rajeshwar Reddy
3)Buchikonda Ravinder
4)Muttavarapu Murali Mohan
5)Munagala Sridhar

(57) Abstract :
The present application relate to processes for the preparation of eslicarbazepine acetate.

No. of Pages : 17 No. of Claims : 1

(12) PATENT APPLICATION PUBLICATION
(21) Application No.2995/CHENP/2012 A
(19) INDIA
(22) Date of filing of Application :02/04/2012
(43) Publication Date : 05/07/2013

(54) Title of the invention : SECURE STORAGE OF TEMPORARY SECRETS

(51) International classification :G06F21/24,G06F13/14
(31) Priority Document No :12/577,846
(32) Priority Date :13/10/2009
(33) Name of priority country :U.S.A.
(86) International Application No :PCT/US2010/050275
Filing Date :24/09/2010
(87) International Publication No :WO 2011/046731 A3
(61) Patent of Addition to Application Number :NA
Filing Date :NA
(62) Divisional to Application Number :NA
Filing Date :NA

(71)**Name of Applicant :**
1)MICROSOFT CORPORATION
Address of Applicant :ONE MICROSOFT CORPORATION, LCA-INTERNATIONAL PATENTS, ONE MICROSOFT WAY, REDMOND, WASHINGTON 98052-6399 U.S.A.
(72)**Name of Inventor :**
1)THOM, STEFAN
2)ILAC, CRISTIAN MARIUS

(57) Abstract :
Temporarily sensitive information can be stored in the non-volatile storage of a TPM, from which it can be securely, and irretrievably, deleted. Additionally, information stored in a TPM can secure information stored on communication ally dis connectable storage media such that, when communication ally disconnected, the information stored on such media is inaccessible. A whole volume encryption service key can be protected by a key stored in a TPM and, even if the protector remains accessible, the secure deletion of the key from the TPM prevents unauthorized disclosure of the whole volume encryption service key. Additionally, TPM stored data can be released only when a computing device is in a particular state, as determined by the PCRs. A hibernation image can be encrypted and the key stored with the TPM such that it is released to decrypt the image and restore active computing only if the state has not materially changed during hibernation.

No. of Pages : 30 No. of Claims : 11

(12) PATENT APPLICATION PUBLICATION
(19) INDIA
(22) Date of filing of Application :02/04/2012
(21) Application No.2996/CHENP/2012 A
(43) Publication Date : 05/07/2013

(54) Title of the invention : COIL MANUFACTURING DEVICE AND METHOD

(51) International classification :B23K26/20,B23K26/03,B23K26/06,B23K26/08
(31) Priority Document No :2009-230882
(32) Priority Date :02/10/2009
(33) Name of priority country :Japan
(86) International Application No :PCT/JP2010/063613
Filing Date :11/08/2010
(87) International Publication No :WO 2011/040127 A1
(61) Patent of Addition to Application Number :NA
Filing Date :NA
(62) Divisional to Application Number :NA
Filing Date :NA

(71)**Name of Applicant :**
1)HITACHI ZOSEN CORPORATION
Address of Applicant :7-89, NANKO KITA 1-CHOME, SUMINOE-KU, OSAKA-SHI, OSAKA, 5598559 Japan
(72)**Name of Inventor :**
1)KITAGAWA, AKIKAZU
2)YAMAZAKI, YOSUKE
3)TAKENAKA, TOSHIYA
4)HAMAKITA, TOSHIROH
5)MIKATA, MASAKI

(57) Abstract :
Disclosed are a coil (3) manufacturing method and device wherein, in order to enable high precision and high efficiency coil (3) production without using filler wire, a coil (3) is manufactured by welding U-shaped pipes (2) to both ends of a plurality of straight pipes (1). The device is provided with a laser welding head (11), which uses a condensing lens (15) having a focal length of at least twice the pipe diameter of the pipes to be welded (1), (2) to aim a laser light (13) at, and weld, the joint position (W) of straight pipes (1), positioned and held on a work setting jig (24), and U-shaped pipes (2), temporarily fitted to both ends of the straight pipes (1).

No. of Pages : 24 No. of Claims : 15

(12) PATENT APPLICATION PUBLICATION
(19) INDIA
(22) Date of filing of Application :04/04/2012
(21) Application No.3100/CHENP/2012 A
(43) Publication Date : 05/07/2013

(54) Title of the invention : SMOKE FILTRATION

(51) International classification :A24D3/16
(31) Priority Document No :0915814.8
(32) Priority Date :10/09/2009
(33) Name of priority country :U.K.
(86) International Application No :PCT/GB2010/051504
Filing Date :09/09/2010
(87) International Publication No :WO 2011/030151 A1
(61) Patent of Addition to Application Number :NA
Filing Date :NA
(62) Divisional to Application Number :NA
Filing Date :NA

(71)**Name of Applicant :**
1)BRITISH AMERICAN TOBACCO (INVESTMENTS) LIMITED
Address of Applicant :GLOBE HOUSE, 1 WATER, STREET, LONDON WC2R 3LA U.K.
(72)**Name of Inventor :**
1)BRANTON, PETER
2)SCHUTH, FERDI
3)SCHWICKARDI, MANFRED

(57) Abstract :
The invention relates to a smoking article comprising a carbonaceous dried gel (3), (such as a xerogel, aerogel or cryogel), a filter (2) for a smoking article comprising dried gel and the use of a carbonaceous dried gel for the filtration of smoke.

No. of Pages : 27 No. of Claims : 15

(12) PATENT APPLICATION PUBLICATION
(19) INDIA
(22) Date of filing of Application :04/04/2012
(21) Application No.3101/CHENP/2012 A
(43) Publication Date : 05/07/2013

(54) Title of the invention : WATER PURIFIER

(51) International classification	:C02F1/44, B01D 61/20
(31) Priority Document No	:2009-232488
(32) Priority Date	:06/10/2009
(33) Name of priority country	:Japan
(86) International Application No	:PCT/JP2010/065700
Filing Date	:13/09/2010
(87) International Publication No	:WO 2011/043159 A1
(61) Patent of Addition to Application Number	:NA
Filing Date	:NA
(62) Divisional to Application Number	:NA
Filing Date	:NA

(71)**Name of Applicant :**
1)SHARP KABUSHIKI KAISHA
Address of Applicant :22-22, NAGAIKE-CHO, ABENO-KU, OSAKA-SHI, OSAKA, 545-8522 Japan
(72)**Name of Inventor :**
1)IKEMIZU, MUGIHEI
2)MORISUE, TAKASHI

(57) Abstract :
Provided is a water purifier capable of predicting a remainder of a usable period of a filtering medium in accordance with water quality of raw water. The water purifier (l) includes- a filtering medium (29); a water quantity measurement part (22); a water pressure measurement part (23); and an arithmetic part (27). The filtering medium (29) is to cause the raw water pass therethrough to be purified water. The water quantity measurement part (22) is to detect a quantity of the water passing through the filtering medium (29). The water pressure measurement part (23) is to detect a water pressure on a raw water side of the filtering medium (29). The arithmetic part (27) is configured so as to calculate the remainder of the usable period of the filtering medium (29) based on a ratio between the water quantity detected by the water quantity measurement part (22) and the water pressure detected by the water pressure measurement part (23).

No. of Pages : 105 No. of Claims : 12

(12) PATENT APPLICATION PUBLICATION
(19) INDIA
(22) Date of filing of Application :23/05/2012
(21) Application No.2058/CHE/2012 A
(43) Publication Date : 05/07/2013

(54) Title of the invention : CONTACTLESS INTEGRATED CIRCUIT HAVING NFC AND UHF OPERATING MODES

(51) International classification :G06K19/077
(31) Priority Document No :FR11 55300
(32) Priority Date :17/06/2011
(33) Name of priority country :France
(86) International Application No :NA
Filing Date :NA
(87) International Publication No : NA
(61) Patent of Addition to Application Number :NA
Filing Date :NA
(62) Divisional to Application Number :NA
Filing Date :NA

(71)**Name of Applicant :**
1)INSIDE SECURE
Address of Applicant :41 PARC CLUB DU GOLF 13856 AIX-EN-PROVENCE CEDEX 3 France
(72)**Name of Inventor :**
1)CHARRAT BRUNO
2)CORDIER NICOLAS

(57) Abstract :
The invention relates to a contactless integrated circuit comprising: modulation and demodulation circuits (RRM, UHRC) configured to connect to a HF antenna circuit (1) to emit and receive HF signals by inductive coupling in a reader mode, modulation and demodulation circuits (URM, UHRC) configured to connect to a UHF antenna (UA) to emit and receive UHF signals by electric coupling in a reader mode, a data processing circuit (DPU) connected to the modulation and demodulation circuits, and configured to provide data to be emitted to the modulation circuits, and to process received signals, transmitted by the demodulation circuits, the demodulation circuits comprising a common demodulation circuit (UHRC) to equally process signals received by the UHF and HF antennas.

No. of Pages : 33 No. of Claims : 19

(12) PATENT APPLICATION PUBLICATION
(21) Application No.23/CHE/2012 A
(19) INDIA
(22) Date of filing of Application :02/01/2012
(43) Publication Date : 05/07/2013

(54) Title of the invention : INVENTION OF UNPENTOCTIUM, UNSEPTHEXIUM AND BINILOCTIUM BY R. VELMURUGAN

(51) International classification :C11D
(31) Priority Document No :NA
(32) Priority Date :NA
(33) Name of priority country :NA
(86) International Application No :NA
Filing Date :NA
(87) International Publication No : NA
(61) Patent of Addition to Application Number :NA
Filing Date :NA
(62) Divisional to Application Number :NA
Filing Date :NA

(71)**Name of Applicant :**
1)R. VELMURUGAN
Address of Applicant :146/5 NORTH STREET, SENGAMEDU(VILL), AVINANGUDI(PO) TITTAGUDI(TK), CUDDALORE(DT) 606 112 Tamil Nadu India
(72)**Name of Inventor :**
1)R. VELMURUGAN

(57) Abstract :
Carneoscopic ring is actually constituted by calcium soap of higher fatty acids .In Calcium soap of higher fatty acid many more metal atom deposited inside of calcium soap of higher fatty acid ring. At different time various type of metal atoms deposited in the ring and commence to rotate in the ring. At different time we can able to observe different type of element in human eye's carneoscopic ring emitted when we inject suitable injection in human body .

No. of Pages : 5 No. of Claims : 3

(12) PATENT APPLICATION PUBLICATION
(19) INDIA
(22) Date of filing of Application :02/04/2012
(21) Application No.3006/CHENP/2012 A
(43) Publication Date : 05/07/2013

(54) Title of the invention : A BONE REGENERATION AGENT COMPRISING GELATIN

(51) International classification :A61L27/00,A61K38/17 ,A61P19/00,C07K14/78
(31) Priority Document No :2009-204218
(32) Priority Date :04/09/2009
(33) Name of priority country :Japan
(86) International Application No :PCT/JP2010/065108
Filing Date :03/09/2010
(87) International Publication No :WO 2011/027850 A1
(61) Patent of Addition to Application Number :NA
Filing Date :NA
(62) Divisional to Application Number :NA
Filing Date :NA

(71)**Name of Applicant :**
1)FUJIFILM CORPORATION
Address of Applicant :26-30, NISHIAZABU 2-CHOME, MINATO-KU, TOKYO 106-0031 Japan
(72)**Name of Inventor :**
1)HIRATSUKA, TAKAHIRO
2)OOYA, SHOUJI
3)NISHIMURA, ICHIRO

(57) Abstract :
It is an object of the present invention to provide a bone regeneration agent and a bone supplementation formulation, in which a supplementation material itself is capable of promoting bone regeneration. The present invention provides a bone regeneration agent which comprises a gelatin having an amino acid sequence derived from a partial amino acid of collagen.

No. of Pages : 30 No. of Claims : 17

(12) PATENT APPLICATION PUBLICATION
(19) INDIA
(22) Date of filing of Application :02/04/2012
(21) Application No.3007/CHENP/2012 A
(43) Publication Date : 05/07/2013

(54) Title of the invention : HIGH PERFORMANCE THERMOPLASTIC ELASTOMER COMPOSITION

(51) International classification :C08L23/04
(31) Priority Document No :12/559,223
(32) Priority Date :14/09/2009
(33) Name of priority country :U.S.A.
(86) International Application No :PCT/US2010/046618
Filing Date :25/08/2010
(87) International Publication No :WO 2011/031475 A1
(61) Patent of Addition to Application Number :NA
Filing Date :NA
(62) Divisional to Application Number :NA
Filing Date :NA

(71)**Name of Applicant :**
1)SUMITOMO CHEMICAL COMPANY, LIMITED
Address of Applicant :27-1, SHINKAWA 2-CHOME, CHUO-KU, TOKYO 104-8260 Japan
(72)**Name of Inventor :**
1)BOKHARI, NADEEM AKHTAR
2)OHTANI, KOUSUKE
3)IJICHI, YASUHITO

(57) Abstract :
The present invention provides a thermoplastic elastomer composition comprising: 100 parts by weight of component (A), 10 to 100 parts by weight of component (B), 50 to 200 parts by weight of component (C) and 5 to 30 parts by weight of component (D). Component (A) is a propylene polymer having a melting point of 155 °C or more. Component (B) is a crystalline propylene-ethylene copolymer. Component (C) is an ethylene-ct-olefin rubber having Mooney Viscosity of 30 to 1 O0(ML1±4, 125 °C). Component (D) is a hydrogenated product of block copolymer comprising blocks of aromatic vinyl compound units and blocks of conjugated diene compound units.

No. of Pages : 31 No. of Claims : 13

(12) PATENT APPLICATION PUBLICATION
(19) INDIA
(22) Date of filing of Application :04/04/2012
(21) Application No.3110/CHENP/2012 A
(43) Publication Date : 05/07/2013

(54) Title of the invention : UNLOCKING DEVICE

(51) International classification :E05B65/12,E05B65/20
(31) Priority Document No :10 2009 048 983.5
(32) Priority Date :09/10/2009
(33) Name of priority country :Germany
(86) International Application No :PCT/EP2010/056106
Filing Date :05/05/2010
(87) International Publication No :WO 2011/042220 A1
(61) Patent of Addition to Application Number :NA
Filing Date :NA
(62) Divisional to Application Number :NA
Filing Date :NA

(71)**Name of Applicant :**
1)GEBR. BODE GMBH & CO. KG
Address of Applicant :OCHSHAUSER STR, 14, 34123 KASSEL Germany
(72)**Name of Inventor :**
1)PELLEGRINI, ANDREAS
2)LINNENKOHL, LARS
3)SCHUNKE, ANDREAS

(57) Abstract :
The invention relates to an unlatching device (20) for public transportation vehicles, comprising a deflection rocker (4) connected to a first rotatable shaft (6), said deflection rock being connected by means of connecting element (5), to an unlocking element of a lock and being provided with a projecting driving pin (11), and further comprising an actuating lever (8), which is mounted on the first shaft (6) and routable about the first shaft (6), and a cam wheel (1) connected to a second rotable shaft (7), said cam wheel meshing with the deflection rocker (4). A rotation of the cam wheel (1) causes a pivoting of the deflection rocker (4), and thus a movement of the connecting element (5) and unlocking of the lock. Rotating the actuating lever (8) causes the actuating lever (8) to come in contact with the driving pin (11), and to catch said driving pin and during further rotation also the deflection rocker (4), whereby the connecting element (5) is moved and the lock unlocked.

No. of Pages : 19 No. of Claims : 15

(12) PATENT APPLICATION PUBLICATION
(21) Application No.2605/CHE/2011 A
(19) INDIA
(22) Date of filing of Application :29/07/2011
(43) Publication Date : 05/07/2013

(54) Title of the invention : ORAL BISPHOSPHONATE FORMULATIONS

(51) International classification :A61K
(31) Priority Document No :NA
(32) Priority Date :NA
(33) Name of priority country :NA
(86) International Application No :NA
Filing Date :NA
(87) International Publication No : NA
(61) Patent of Addition to Application Number :NA
Filing Date :NA
(62) Divisional to Application Number :NA
Filing Date :NA

(71)**Name of Applicant :**
1)Dr Reddy™s Laboratories Limited
Address of Applicant :7-1-27 Ameerpet Hyderabad Andhra Pradesh India Jammu & Kashmir India
2)Dr.Reddy™s Laboratories Inc
(72)**Name of Inventor :**
1)Hemanth Prakash Joshi
2)Narayanan Badri Vishwanathan
3)Alkesh Rajendra Kasliwal
4)Kishor Bhalchandra Kothawade
5)Ajaykumar Narayan Sharma

(57) Abstract :
The invention provides a pharmaceutical composition comprising a bisphosphonate, an acidic compound, an alkaline component, and optionally an anti-ulcer agent and methods of treating osteoporosis in a mammal using the pharmaceutical compositions.

No. of Pages : 25 No. of Claims : 10

(12) PATENT APPLICATION PUBLICATION
(19) INDIA
(22) Date of filing of Application :04/04/2012
(21) Application No.3095/CHENP/2012 A
(43) Publication Date : 05/07/2013

(54) Title of the invention : LOW-PASS FILTER DESIGN

(51) International classification :H03H11/12
(31) Priority Document No :12/603,448
(32) Priority Date :21/10/2009
(33) Name of priority country :U.S.A.
(86) International Application No :PCT/US2010/053626
Filing Date :21/10/2010
(87) International Publication No :WO 2011/050213 A1
(61) Patent of Addition to Application Number :NA
Filing Date :NA
(62) Divisional to Application Number :NA
Filing Date :NA

(71)**Name of Applicant :**
1)QUALCOMM INCORPORATED
Address of Applicant :INTERNATIONAL IP ADMINISTRATION, 5775 MOREHOUSE DRIVE, SAN DIEGO, CALIFORNIA 92121-1714 U.S.A.
(72)**Name of Inventor :**
1)AREZOU KHATIBI
2)ARA BICAKCI
3)RAINER GAETHKE

(57) Abstract :
Techniques for low-pass filtering with high quality factor (Q). In an exemplary embodiment, an input current is coupled to the drain of a first transistor. The drain and the gate of the first transistor are coupled together by a resistor Rl, and the drain is coupled to a reference voltage by a first capacitor CI. The gate is coupled to a reference voltage by a second capacitor C2. The gate is further coupled to the gate of a second transistor, and an output current is coupled to the drain of the second transistor. In another exemplary embodiment, further passive elements may be coupled to generate an odd-order low-pass transfer characteristic. Multiple filters may be cascaded in series to synthesize a filter having arbitrary order.

No. of Pages : 40 No. of Claims : 23

(12) PATENT APPLICATION PUBLICATION
(21) Application No.3097/CHENP/2012 A
(19) INDIA
(22) Date of filing of Application :04/04/2012
(43) Publication Date : 05/07/2013

(54) Title of the invention : TRIAZINE CONTAINING FLUOROPOLYETHER ELASTOMERS HAVING VERY LOW GLASS TRANSITION TEMPERATURES, COMPOSITIONS CONTAINING THEM AND METHODS OF MAKING THEM

(51) International classification :C08G65/32
(31) Priority Document No :0917450.9
(32) Priority Date :06/10/2009
(33) Name of priority country :U.K.
(86) International Application No :PCT/US2010/051422
Filing Date :05/10/2010
(87) International Publication No :WO 2011/044093 A3
(61) Patent of Addition to Application Number :NA
Filing Date :NA
(62) Divisional to Application Number :NA
Filing Date :NA

(71)**Name of Applicant :**
1)3M INNOVATIVE PROPERTIES COMPANY
Address of Applicant :3M CENTER, POST OFFICE BOX 33427 SAINT PAUL, MINNESOTA 55133-3427 U.S.A.
(72)**Name of Inventor :**
1)CORVELEYN, STEVEN, G.
2)DAMS, RUDOLF, J.
3)GROOTAERT, WERNER, M., A.
4)DAHLKE, GREGG D.
5)GUERRA, MIGUEL, A.

(57) Abstract :
A method of making a fluoropolyether elastomer containing triazine groups and having a glass transition temperature of less than -40°C, including providing (i) one or more saturated fluoropolyethers containing repeating moieties selected from (-C4F8O-), (-C3F6O-), (-C2F4O-),(-CF2O-) and combinations thereof and further containing at least one functional group at a terminal carbon atom of the backbone chain, or of a side chain if present, wherein the terminal carbon atom may be a primary or secondary carbon atom and wherein the functional group is capable of reacting with a functional group of the fluorinated compound according to (ii) below to form a triazine ring, (ii) on e or more fluorinated compound containing at least one perfluorinated alkyl or perfluorinated alkylene moiety wherein the carbon atoms of the perfluorinated alkyl or alkylene moiety may be interrupted by one or more oxygen atoms and wherein the fluorinated compound further contains at least one functional group capable of reacting with the functional group of the one or more fluoropolyethers to form a triazine; curing the components according to (i) and (ii) to form triazines. Further provided are cured compositions, articles comprising the cured compositions and methods of making articles.

No. of Pages : 39 No. of Claims : 10

(12) PATENT APPLICATION PUBLICATION
(19) INDIA
(22) Date of filing of Application :04/04/2012
(21) Application No.3098/CHENP/2012 A
(43) Publication Date : 05/07/2013

(54) Title of the invention : DIAMINOPYRIMIDINES AS P2X3 AND P2X2/3 ANTAGONISTS

(51) International classification	:A61K 31/505, C07D 239/48, C07D 403/12
(31) Priority Document No	:60/550,499
(32) Priority Date	:05/03/2004
(33) Name of priority country	:U.S.A.
(86) International Application No	:PCT/EP2005/02020
Filing Date	:25/02/2005
(87) International Publication No	:WO/2005/095359
(61) Patent of Addition to Application Number	:NA
Filing Date	:NA
(62) Divisional to Application Number	:3229/CHENP/2006
Filed on	:25/02/2005

(71)**Name of Applicant :**
1)F. HOFFMANN-LA ROCJE AG
Address of Applicant :124 GRENZACHERSTRASSE, CH-4070 BASEL Switzerland
(72)**Name of Inventor :**
1)CARTER, DAVID, SCOTT
2)DILLON, MICHAEL, PATRICK
3)HAWLEY, RONALD, CHARLES
4)LIN, CLARA, JEOU, JEN
5)PARISH, DANIEL, WARREN
6)BROKA, CHRIS, ALLEN
7)JAHANGIR, ALAM

(57) Abstract :
This invention relates to a compound of formula (I) or a pharmaceutically acceptable salts thereof, wherein the substituents are as described in the description.

No. of Pages : 146 No. of Claims : 6

(12) PATENT APPLICATION PUBLICATION
(21) Application No.31/CHE/2012 A
(19) INDIA
(22) Date of filing of Application :03/01/2012
(43) Publication Date : 05/07/2013

(54) Title of the invention : PUMP AND VALVE CONTROLLED LIQUID (PVCL) CLUTCH AND BREAK

(51) International classification :A63B
(31) Priority Document No :NA
(32) Priority Date :NA
(33) Name of priority country :NA
(86) International Application No :NA
Filing Date :NA
(87) International Publication No : NA
(61) Patent of Addition to Application Number :NA
Filing Date :NA
(62) Divisional to Application Number :NA
Filing Date :NA

(71)**Name of Applicant :**
1)HAIDARALI.V
Address of Applicant :VADUKUNNA TH(HOUSE) TANALUR(PO) 676307(PIN) MALAPPURAM Kerala India
(72)**Name of Inventor :**
1)HAIDARALI.V
2)NASHIHAD.K

(57) Abstract :
This PVCL system comprises mainly a pump, valve and a differential gear. This pump is use to flow the liquid and valve is used to regulate the flow of liquid. Valve is fitted in between inlet and outlet of the pump and the liquid is flowing through the valve. When valve is closed a pressure is generated in the liquid chamber which results in the arrest of the working of the pump. Similarly a breaking system can be developed with this principle. We can workout an automatic reverse breaking system without least backward movement even at a steep ascending road with the help of one way rotating system and also workout a clutch system with the help of differential gear to transmit engine power to the wheels without frictional wear and tear of the parts as the traditional clutching and breaking system.

No. of Pages : 50 No. of Claims : 10

(12) PATENT APPLICATION PUBLICATION
(19) INDIA
(22) Date of filing of Application :31/05/2012
(21) Application No.2192/CHE/2012 A
(43) Publication Date : 05/07/2013

(54) Title of the invention : A SYSTEM FOR USING ATTRIBUTES TO DEPLOY DEMAND RESPONSE RESOURCES

(51) International classification :G06F 9/00
(31) Priority Document No :13/153251
(32) Priority Date :03/06/2011
(33) Name of priority country :U.S.A.
(86) International Application No :NA
Filing Date :NA
(87) International Publication No : NA
(61) Patent of Addition to Application Number :NA
Filing Date :NA
(62) Divisional to Application Number :NA
Filing Date :NA

(71)**Name of Applicant :**
1)HONEYWELL INTERNATIONAL INC.
Address of Applicant :101 COLUMBIA ROAD, P.O. BOX 2245, MORRISTOWN, NEW JERSEY 07962-2245 U.S.A.
(72)**Name of Inventor :**
1)EDWARD KOCH

(57) Abstract :
A system for using attributes to deploy demand response resources. A service provider may provide energy to customers. The provider may via interactions modify consumption of the energy by the customers. Customers that participate in these interactions may be regarded as demand response resources. Interactions may incorporate demand response signals sent to the resources at their respective facilities. Each resource may have a demand response client which has an association with a customer account in a demand response management system of the provider. The association may be regarded as a binding of the demand response client. The binding may involve inputting an attribute of the demand response client, which can be correlated to the customer account. The attribute may be, for example, a location of the demand response client. Such attribute may be used for the association of the demand response client with a proper customer account.

No. of Pages : 15 No. of Claims : 15

(12) PATENT APPLICATION PUBLICATION
(21) Application No.2193/CHE/2012 A
(19) INDIA
(22) Date of filing of Application :31/05/2012
(43) Publication Date : 05/07/2013

(54) Title of the invention : IMAGE PROCESSING APPARATUS, IMAGE PROCESSING METHOD, AND PROGRAM

(51) International classification :G06T 7/00
(31) Priority Document No :2011126403
(32) Priority Date :06/06/2011
(33) Name of priority country :Japan
(86) International Application No :NA
Filing Date :NA
(87) International Publication No : NA
(61) Patent of Addition to Application Number :NA
Filing Date :NA
(62) Divisional to Application Number :NA
Filing Date :NA

(71)**Name of Applicant :**
1)SONY CORPORATION
Address of Applicant :1-7-1 KONAN, MINATO-KU, TOKYO Japan
(72)**Name of Inventor :**
1)MASAMI OGATA
2)TAKAFUMI MORIFUJI
3)SUGURU USHIKI

(57) Abstract :
A parallax detection unit generates a parallax map indicating a parallax of each pixel of an image formed by right and left images and generates a reliability map indicating reliability of the parallax. A depth information estimation unit generates a depth information map indicating the depth of a subject on the image based on the right and left images. A depth parallax conversion unit converts the depth information map into a pseudo-parallax map using a conversion equation used to convert depth information to parallax information. A parallax synthesis unit synthesizes the parallax map and the pseudo-parallax map to generate a corrected parallax map based on the reliability map. The present technology is applicable to an image processing apparatus.

No. of Pages : 76 No. of Claims : 12

(12) PATENT APPLICATION PUBLICATION
(19) INDIA
(22) Date of filing of Application :09/04/2012
(21) Application No.3149/CHENP/2012 A
(43) Publication Date : 05/07/2013

(54) Title of the invention : PAD COVER

(51) International classification	:A63B71/12,A63B 71/08
(31) Priority Document No	:2009904445
(32) Priority Date	:11/09/2009
(33) Name of priority country	:Australia
(86) International Application No	:PCT/AU2010/000305
Filing Date	:15/03/2010
(87) International Publication No	:WO 2011/029124 A1
(61) Patent of Addition to Application Number	:NA
Filing Date	:NA
(62) Divisional to Application Number	:NA
Filing Date	:NA

(71)**Name of Applicant :**
1)CLADS4PADS PTY LTD
Address of Applicant :C/- CLARANDON LAWYERS PTY LTD, 'RIALTO NORTH TOWER', LEVEL 17 525 COLLINS STREET, MELBOURNE, VICTORIA 3000 Australia
(72)**Name of Inventor :**
1)CROFT, NEIL DAVID

(57) Abstract :
A cover for a protective sport pad including a cover portion for covering a surface of the pad, and a fastening means for fastening the cover to the protective sport pad. In one form, the protective sport pad is a cricket pad for a lower leg portion of a player, and the cover portion is arranged to cover an exposed surface of the pad. The cover portion may be formed of coloured material to change the colour of the protective sport pad

No. of Pages : 18 No. of Claims : 15

(12) PATENT APPLICATION PUBLICATION
(21) Application No.3150/CHENP/2012 A
(19) INDIA
(22) Date of filing of Application :09/04/2012
(43) Publication Date : 05/07/2013

(54) Title of the invention : OPERATING GUIDANCE EFFECT DISPLAY APPARATUS, OPERATING GUIDANCE EFFECT DISPLAY METHOD, AND COMPUTER

(51) International classification :G05B19/418,G05B23/02,,G06Q 50/00
(31) Priority Document No :2010-200108
(32) Priority Date :07/09/2010
(33) Name of priority country :Japan
(86) International Application No :PCT/JP2011/068534
Filing Date :15/08/2011
(87) International Publication No :WO 2012/032900 A1
(61) Patent of Addition to Application Number :NA
Filing Date :NA
(62) Divisional to Application Number :NA
Filing Date :NA

(71)**Name of Applicant :**
1)NIPPON STEEL CORPORATION
Address of Applicant :6-1, MARUNOUCHI 2-CHOME, CHIYODA-KU, TOKYO 1008071 Japan
(72)**Name of Inventor :**
1)ISAO OSHITA
2)SHINICHIRO SHIMOI
3)HIDETO NAKAMURA

(57) Abstract :
A trouble classification ID and a cause ID are mutually associated with an operating index and a guidance ID. When an operator specifies a target period and a target operating index, a record of the target operating index in the target period is obtained. Further, a trouble classification ID and cause ID associated with the target operating index are extracted, and a message outputted in the target period based on a guidance rule associated with the extracted trouble classification ID and cause ID is extracted. A sequential line graph (1411) indicating a transition of the record of the target operating index in the target period, a bar graph (1421) indicating a period in which the message was outputted, and a message (1422) corresponding to the bar graph (1421) are displayed.

No. of Pages : 104 No. of Claims : 13

(12) PATENT APPLICATION PUBLICATION
(19) INDIA
(22) Date of filing of Application :03/04/2012
(21) Application No.3045/CHENP/2012 A
(43) Publication Date : 05/07/2013

(54) Title of the invention : STAINLESS STEEL HAVING LOCAL VARIATIONS IN MECHANICAL RESISTANCE

(51) International classification	:C21D1/09,B21D22/20,B62D 25/02
(31) Priority Document No	:NA
(32) Priority Date	:NA
(33) Name of priority country	:NA
(86) International Application No	:PCT/FR2009/001110
Filing Date	:21/09/2009
(87) International Publication No	:WO 2011/033180 A1
(61) Patent of Addition to Application Number	:NA
Filing Date	:NA
(62) Divisional to Application Number	:NA
Filing Date	:NA

(71)**Name of Applicant :**
1)APERAM
Address of Applicant :12C, RUE GUILLAUME KROLL, 1882 Luxembourg
(72)**Name of Inventor :**
1)SANTACREU, PIERRE-OLIVIER
2)PIC, AURELIEN
3)PINARD, FABRICE

(57) Abstract :
The invention mainly relates to a stainless steel sheet containing a minimum of 10.5% by weight of Cr and a maximum of 1.2% by weight of C, the microstructure of which is martensitic or austeno-martensitic and comprises at least 2% by volume of martensite, essentially characterized in that it comprises at least one local portion of lesser mechanical resistance, having a martensitic content at least 10% lower than that of the remainder of said sheet; said local portion being at least partly with a thickness equal to that of said sheet. The invention also relates to a method for manufacturing this steel sheet and to a steel part which may be obtained by deformation of this sheet. Fig, 1B

No. of Pages : 29 No. of Claims : 12

(12) PATENT APPLICATION PUBLICATION
(21) Application No.3153/CHENP/2012 A
(19) INDIA
(22) Date of filing of Application :09/04/2012
(43) Publication Date : 05/07/2013

(54) Title of the invention : ADAPTIVE NEWTON'S METHOD FOR RESERVOIR SIMULATION

(51) International classification :G06G7/48
(31) Priority Document No :61/265,103
(32) Priority Date :30/11/2009
(33) Name of priority country :U.S.A.
(86) International Application No :PCT/US2010/047678
Filing Date :02/09/2010
(87) International Publication No :WO 2011/066021 A1
(61) Patent of Addition to Application Number :NA
Filing Date :NA
(62) Divisional to Application Number :NA
Filing Date :NA

(71)**Name of Applicant :**
1)EXXONMOBIL UPSTREAM RESEARCH COMPANY
Address of Applicant :P.O. BOX 2189, HOUSTON, TEXAS 77252-2189 U.S.A.
(72)**Name of Inventor :**
1)PENGBO LU
2)BRET L. BECKNER

(57) Abstract :
A method of performing a simulation of a subsurface hydrocarbon reservoir. The reservoir is approximated by | reservoir model having a plurality of cells. Each cell has an equation set representing a reservoir property. An initial guess is pre vided to a solution for a system of equations formed using the equation set for each of the cells. An iterative root- finding metho and the initial guess are used to solve for a solution to the system of equations. When the number of non-converged cells is greate than a predetermined amount, neighboring converged cells are added to the non-converged cells. Parts of the method are repeatec substituting the solved solution for the initial guess and the equation sets corresponding to the non-converged cells for the firs system of equations, until substantially all equation sets satisfy the convergence criterion. The solved solution is outputted as simulation of the subsurface reservoir.

No. of Pages : 41 No. of Claims : 25

(12) PATENT APPLICATION PUBLICATION
(19) INDIA
(22) Date of filing of Application :09/04/2012
(21) Application No.3154/CHENP/2012 A
(43) Publication Date : 05/07/2013

(54) Title of the invention : BLUETOOTH INTRODUCTION SEQUENCE THAT REPLACES FREQUENCIES UNUSABLE DUE TO OTHER WIRELESS TECHNOLOGY CO-RESIDENT ON A BLUETOOTH-CAPABLE DEVICE

(51) International classification	:H04B1/713, H04W88/06
(31) Priority Document No	:61/256,198
(32) Priority Date	:29/10/2009
(33) Name of priority country	:U.S.A.
(86) International Application No	:PCT/US2010/054466
Filing Date	:28/10/2010
(87) International Publication No	:WO 2011/059735 A1
(61) Patent of Addition to Application Number	:NA
Filing Date	:NA
(62) Divisional to Application Number	:NA
Filing Date	:NA

(71)**Name of Applicant :**
1)QUALCOMM INCORPORATED
Address of Applicant :INTERNATIONAL IP ADMINISTRATION, 5775 MOREHOUSE DRIVE, SAN DIEGO, CALIFORNIA 92121-1714 U.S.A.
(72)**Name of Inventor :**
1)JOEL LINSKY

(57) Abstract :
Interference from other wireless technology co-resident on a Bluetooth-capable device may render one or more Bluetooth frequencies unusable for a Bluetooth introduction sequence. In this case, one or more usable frequencies may be substituted for the one or more unusable frequencies to permit the introduction sequence to proceed. The one or more usable frequencies may be selected from a known set of usable frequencies in the current Bluetooth frequency train. Alternatively, a frequency re-mapping process may be used to select the one or more usable frequencies from the current Bluetooth frequency train.

No. of Pages : 27 No. of Claims : 26

(12) PATENT APPLICATION PUBLICATION
(19) INDIA
(22) Date of filing of Application :09/04/2012
(21) Application No.3155/CHENP/2012 A
(43) Publication Date : 05/07/2013

(54) Title of the invention : ASSET MANAGEMENT SYSTEM WITH ASSET MAINTENANCE PLANNING

(51) International classification	:G06Q10/00,B64F5/00,G05B 23/02
(31) Priority Document No	:0917527.4
(32) Priority Date	:07/10/2009
(33) Name of priority country	:U.K.
(86) International Application No	:PCT/EP2010/063521
Filing Date	:15/09/2010
(87) International Publication No	:WO 2011/042286 A1
(61) Patent of Addition to Application Number	:NA
Filing Date	:NA
(62) Divisional to Application Number	:NA
Filing Date	:NA

(71)**Name of Applicant :**
1)OPTIMIZED SYSTEMS AND SOLUTIONS LIMITED
Address of Applicant :MOOR LANE, DERBY DERBYSHIRE DE24 8BJ U.K.
(72)**Name of Inventor :**
1)NIGEL PETER JACKSON

(57) Abstract :
An asset management system comprising a plurality of assets (12), a plurality of sensors for determining one or more operating conditions for each of said assets and one or more processors (14,22) for determining a risk profile (26,28,30) for each of the assets over time. The processor is arranged to calculate an risk index value for each asset from the risk profile, the risk index providing a relative indicator of the need for maintenance of an asset. A maintenance queue is established and assets are entered into the queue once the risk index value for that asset matches or exceeds a predetermined threshold value (20), the position of the asset in the queue being determined based upon the value of its risk index. (Fig. 1)

No. of Pages : 30 No. of Claims : 23

(12) PATENT APPLICATION PUBLICATION
(19) INDIA
(22) Date of filing of Application :30/04/2012
(21) Application No.1686/CHE/2012 A
(43) Publication Date : 05/07/2013

(54) Title of the invention : FRAUD PREVENTION

(51) International classification	:H01H 47/00
(31) Priority Document No	:13/099,812
(32) Priority Date	:03/05/2011
(33) Name of priority country	:U.S.A.
(86) International Application No	:NA
Filing Date	:NA
(87) International Publication No	: NA
(61) Patent of Addition to Application Number	:NA
Filing Date	:NA
(62) Divisional to Application Number	:NA
Filing Date	:NA

(71)**Name of Applicant :**
1)NCR CORPORATION
Address of Applicant :3097 SATELLITE BLVD., DULUTH, GEORGIA 30096 U.S.A.
(72)**Name of Inventor :**
1)ROSS, GARY
2)MITCHELL, GRAEME
3)LOWDEN, ALISTAIR
4)UTSUMI, YOSHITAKA

(57) Abstract :
An electromagnetic signal transmitter for fraud prevention in a self-service terminal is described. The electromagnetic signal transmitter comprises a plurality of coil drives. The plurality of coil drives may include a first inductive coil drive comprising a first pair of opposing poles; and a second inductive coil drive comprising a second pair of opposing poles, where the second pair of opposing poles are offset from the first pair of opposing poles in at least two dimensions.

No. of Pages : 36 No. of Claims : 15

(12) PATENT APPLICATION PUBLICATION
(19) INDIA
(22) Date of filing of Application :09/04/2012
(21) Application No.3161/CHENP/2012 A
(43) Publication Date : 05/07/2013

(54) Title of the invention : SYSTEM AND METHOD FOR POWER CALIBRATING A PULSE GENERATOR

(51) International classification :H04B1/16,H04W52/02
(31) Priority Document No :12/564,248
(32) Priority Date :22/09/2009
(33) Name of priority country :U.S.A.
(86) International Application No :PCT/US2010/049867
Filing Date :22/09/2010
(87) International Publication No :WO 2011/038030 A1
(61) Patent of Addition to Application Number :NA
Filing Date :NA
(62) Divisional to Application Number :NA
Filing Date :NA

(71)**Name of Applicant :**
1)QUALCOMM INCORPORATED
Address of Applicant :INTERNATIONAL IP ADMINISTRATION, 5775 MOREHOUSE DRIVE, SAN DIEGO, CALIFORNIA 92121-1714 U.S.A.
(72)**Name of Inventor :**
1)ANTHONY F. SEGORIA

(57) Abstract :
An apparatus is disclosed for generating an output signal (e.g., a defined pulse), including a power or current calibration feature. The apparatus comprises a current source adapted to generate a first current to produce the output signal, a current sampling module adapted to generate a second current as a function of (e.g., substantially proportional or equal to) the first current, a reference current module (e.g., a bandgap current source) adapted to generate a third current, and a calibration module adapted to calibrate the first current based on the second and third currents. The current source comprises a plurality of selectable current paths. The current sampling module comprises a replica of at least a portion of one or more current paths of the current source. The calibration module may perform a calibration in response to a defined time, an environment parameter (temperature, voltage, pulse repetition frequency, amplitude requirement change, etc.), or the output signal not being generated.

No. of Pages : 32 No. of Claims : 37

(12) PATENT APPLICATION PUBLICATION
(21) Application No.3162/CHENP/2012 A
(19) INDIA
(22) Date of filing of Application :09/04/2012
(43) Publication Date : 05/07/2013

(54) Title of the invention : IMPROVEMENTS IN OR RELATING TO RADIO POSITIONING

(51) International classification :G01S5/10,G01S5/02
(31) Priority Document No :0917388.1
(32) Priority Date :05/10/2009
(33) Name of priority country :U.K.
(86) International Application No :PCT/GB2010/051654
Filing Date :04/10/2010
(87) International Publication No :WO 2011/042726 A1
(61) Patent of Addition to Application Number :NA
Filing Date :NA
(62) Divisional to Application Number :NA
Filing Date :NA

(71)**Name of Applicant :**
1)BAE SYSTEMS PLC
Address of Applicant :6 CARLTON GARDENS, LONDON SW1Y 5AD U.K.
(72)**Name of Inventor :**
1)RAMSEY MICHAEL FARAGHER

(57) Abstract :
Methods and systems for radio positioning of a mobile receiver are described. When the mobile receiver (2) is at a first known position (M1), a virtual positioning reference is established by logging the known position (M1) of the mobile receiver (2) together with a local time at which a first instance of a predictably repeated code word is received by the mobile receiver (2) from a terrestrial radio signal transmitter (7). The terrestrial transmitter (7) is assumed to have a known position and the local time is measured relative to a clock local to the mobile device (2). During movement of the mobile receiver (2) from the first known position (M1) to a second unknown position (M2), the local clock is run. When the mobile receiver (2) is at the second unknown position (M2), the local clock is used to determine the time difference between when the virtual positioning reference is predicted to receive a second instance of the code word and when the mobile receiver (2 actually receives the second instance of the code word. From the time difference and the position information of the virtual positioning reference, the position of the mobile receiver (2) at the second position can thus be determined.

No. of Pages : 28 No. of Claims : 18

(12) PATENT APPLICATION PUBLICATION
(19) INDIA
(22) Date of filing of Application :09/04/2012
(21) Application No.3163/CHENP/2012 A
(43) Publication Date : 05/07/2013

(54) Title of the invention : METHOD AND APPARATUS FOR THE AUTOMATIC PREDICTIVE SELECTION OF INPUT METHODS OF WEB BROWSERS

(51) International classification	:H04M1/725,G06F17/30,G06F3/023
(31) Priority Document No	:12/579,225
(32) Priority Date	:14/10/2009
(33) Name of priority country	:U.S.A.
(86) International Application No	:PCT/US2010/052516
Filing Date	:13/10/2010
(87) International Publication No	:WO 2011/047057 A1
(61) Patent of Addition to Application Number	:NA
Filing Date	:NA
(62) Divisional to Application Number	:NA
Filing Date	:NA

(71)**Name of Applicant :**
1)QUALCOMM INCORPORATED
Address of Applicant :INTERNATIONAL IP ADMINISTRATION, 5775 MOREHOUSE DRIVE, SAN DIEGO, CALIFORNIA 92121-1714 U.S.A.
(72)**Name of Inventor :**
1)MICHAEL WILLIAM PADDON

(57) Abstract :
A method and apparatus for predictively selecting an input method at a web browser. Once a user has entered information identifying a web page, contextual information at the web page is examined in order to automatically, predictively select an appropriate input method for the web page. Once the input method has been selected, a corresponding predictive typing program may be applied.

No. of Pages : 31 No. of Claims : 50

(12) PATENT APPLICATION PUBLICATION
(21) Application No.2176/CHE/2012 A
(19) INDIA
(22) Date of filing of Application :30/05/2012
(43) Publication Date : 05/07/2013

(54) Title of the invention : SOLID-STATE IMAGE SENSOR

(51) International classification :H03B 5/00
(31) Priority Document No :2011-125711
(32) Priority Date :03/06/2011
(33) Name of priority country :Japan
(86) International Application No :NA
Filing Date :NA
(87) International Publication No : NA
(61) Patent of Addition to Application Number :NA
Filing Date :NA
(62) Divisional to Application Number :NA
Filing Date :NA

(71)**Name of Applicant :**
1)CANON KABUSHIKI KAISHA
Address of Applicant :30-2, SHIMOMARUKO 3-CHOME, OHTA-KU, TOKYO Japan
(72)**Name of Inventor :**
1)ARAOKA, YUKIO
2)SHINGAI, SATORU

(57) Abstract :
A solid-state image sensor comprising a pixel array having a plurality of pixels, and a plurality of signal processing circuits each of which amplifies a signal of the pixel array, wherein each of the plurality of signal processing circuits comprises an operation amplifier having an input terminal and an output terminal, an input capacitance arranged between the input terminal and the column signal line, and a feedback circuit which connects the input terminal with the output terminal, wherein the feedback circuit is configured to form a feedback path in which a first and a second capacitance elements are arranged in series in a path connecting the input terminal to the output terminal, and a third capacitance element is arranged between a reference potential and a path connecting the first capacitance element to the second capacitance element.

No. of Pages : 27 No. of Claims : 9

(12) PATENT APPLICATION PUBLICATION
(19) INDIA
(22) Date of filing of Application :03/04/2012
(21) Application No.3052/CHENP/2012 A
(43) Publication Date : 05/07/2013

(54) Title of the invention : MALEIC ACID SALT AND CRYSTAL THEREOF

(51) International classification	:C07D413/14, A61K31/536,A61P 1/02
(31) Priority Document No	:2009-220296
(32) Priority Date	:25/09/2009
(33) Name of priority country	:Japan
(86) International Application No	:PCT/JP2010/005786
Filing Date	:27/09/2010
(87) International Publication No	:WO 2011/036895 A1
(61) Patent of Addition to Application Number	:NA
Filing Date	:NA
(62) Divisional to Application Number	:NA
Filing Date	:NA

(71)**Name of Applicant :**
1)KYORIN PHARMACEUTICAL CO., LTD.
Address of Applicant :5, KANDA SURUGADAI 2-CHOME, CHIYODA-KU, TOKYO 1018311 Japan
(72)**Name of Inventor :**
1)TSUBUKI, TAKESHI
2)SAGAWA, TETSUYA
3)FUNADA, KEIKO
4)ARAYA, ICHIRO

(57) Abstract :
Disclosed is a benz[d][1,3]oxazine derivative having excellent stability when used as an active ingredient for a medicinal agent, and also having excellent solubility and crystallinity. Specifically disclosed is 2-[2-((S)-3-dimethylaminopyrrolidin-1-yl)pyridin-3-yl]-5-ethyl7-methoxy-4H-benz [d][1,,3]oxazin-4-one maleate.

No. of Pages : 33 No. of Claims : 12

(12) PATENT APPLICATION PUBLICATION
(21) Application No.3167/CHENP/2012 A
(19) INDIA
(22) Date of filing of Application :09/04/2012
(43) Publication Date : 05/07/2013

(54) Title of the invention : MONITORING MODULE FOR MONITORING A PROCESS WITH AN ELECTRIC ARC

(51) International classification :B23K9/095
(31) Priority Document No :A 1448/2009
(32) Priority Date :11/09/2009
(33) Name of priority country :Austria
(86) International Application No :PCT/AT2010/000330
Filing Date :13/09/2010
(87) International Publication No :WO 2011/029118 A3
(61) Patent of Addition to Application Number :NA
Filing Date :NA
(62) Divisional to Application Number :NA
Filing Date :NA

(71)**Name of Applicant :**
1)FRONIUS INTERNATIONAL GMBH
Address of Applicant :VORCHDORFER STRABE 40, A-4643 PETTENBACH Austria
(72)**Name of Inventor :**
1)HORTENHUBER, MARTIN
2)REINTHALER, GUNTHER

(57) Abstract :
The invention relates to a monitoring module (1..1) for monitoring an electric arc machining process, said module comprising a camera (2), a photo flash lamp (3) and a control system (4) that controls the photo flash lamp (3) and a control system (4) that controls the photo flash lamp (3) in such a way that it illuminates when the camera (2) records the image. According to the invention, said components (2, 3, 4) are arranged in a common housing (5), which comprises a compressed air connection (6) and an air outlet (7) or a deflection device arranged at the housing (5), which is provided for the orientation of the discharging air beam perpendicular to the optical axis (A) of the camera (2). Furthermore, an air flow caused by the compressed air is led via the light source (3) and/or the control system (4) and/or a charging connection (8) for the light source (3).

No. of Pages : 35 No. of Claims : 22

(12) PATENT APPLICATION PUBLICATION
(19) INDIA
(22) Date of filing of Application :09/04/2012
(21) Application No.3168/CHENP/2012 A
(43) Publication Date : 05/07/2013

(54) Title of the invention : A SYSTEM AND METHOD FOR DRUG DETECTION IN EXHALED BREATH

(51) International classification	:G01N33/497,A61B5/097,H01J49/04
(31) Priority Document No	:61/240,752
(32) Priority Date	:09/09/2009
(33) Name of priority country	:U.S.A.
(86) International Application No	:PCT/EP2010/063266
Filing Date	:09/09/2010
(87) International Publication No	:WO 2011/029889 A1
(61) Patent of Addition to Application Number	:NA
Filing Date	:NA
(62) Divisional to Application Number	:NA
Filing Date	:NA

(71)**Name of Applicant :**
1)SENSA BUES AB
Address of Applicant :ALFRED NOBELS ALLE 10, 141 52 HUDDINGE Sweden
(72)**Name of Inventor :**
1)PALMSKOG, GORAN
2)BECK, OLOF

(57) Abstract :
A portable system 10 is disclosed for collecting a sample from exhaled breath of a subject. Drug substance in the exhaled breath are detected or determined. The sample is collected for further analysis using mass-spectroscopy. The system comprises a sampling unit 14 and a housing 12 arranged to hold the sampling unit 14, the sampling unit 14 is adapted to collect non-volatile and volatile compounds of the at least one drug substance from the exhaled breath from the subject. The housing 12 has at least one inlet 15 for the subject to exhale into the housing 12 to the sampling unit 14 and at least one outlet 16 for the exhaled breath to exit through. Figure to be published with the abstract:

No. of Pages : 32 No. of Claims : 33

(12) PATENT APPLICATION PUBLICATION
(21) Application No.3169/CHENP/2012 A
(19) INDIA
(22) Date of filing of Application :09/04/2012
(43) Publication Date : 05/07/2013

(54) Title of the invention : PROPELLER FAN, MOLDING DIE, AND FLUID FEEDER

(51) International classification :F04D29/32,F04D29/38
(31) Priority Document No :2009-210295
(32) Priority Date :11/09/2009
(33) Name of priority country :Japan
(86) International Application No :PCT/JP2010/065301
Filing Date :07/09/2010
(87) International Publication No :WO 2011/030748 A1
(61) Patent of Addition to Application Number :NA
Filing Date :NA
(62) Divisional to Application Number :NA
Filing Date :NA

(71)**Name of Applicant :**
1)SHARP KABUSHIKI KAISHA
Address of Applicant :22-22, NAGAIKE-CHO, ABENO-KU, OSAKA-SHI, OSAKA 545-8522 Japan
(72)**Name of Inventor :**
1)TAKEDA, YASUKATA

(57) Abstract :
A propeller fan with two blades includes a blade (21A) and a blade (21B), and a connection portion (31) connecting the blades together. Each blade has a peripheral edge portion (21a) extending in an arc having a diameter D with a center axis (101) as a center thereof, a front edge portion (21b) arranged on a forward side in a rotational direction, a rear edge portion (21c) arranged on an opposite side in the rotational direction, and a leading blade edge portion (21d) connecting the front edge portion (21 b) and the peripheral edge portion (21a). A plane which includes each intersection (21e) between the rear edge portion (21c) and the peripheral edge portion (21a) and is perpendicular to the center axis (101) is defined as y. When the propeller fan is viewed in a direction parallel to a plane including the leading blade edge portions (2Id) and the center axis (101), a distance H between plane y and a connected portion between the front edge portion (21b) of the blade (21 A) and the rear edge portion (21c) of the blade (21B), on a line of the center axis (101), satisfies 0.028 < H/D < 0.056. With such a structure, a propeller fan, a molding die, and a fluid feeder which make a significant contribution in terms of energy-saving properties and resource-saving design can be provided.

No. of Pages : 49 No. of Claims : 12

(12) PATENT APPLICATION PUBLICATION
(21) Application No.3064/CHENP/2012 A
(19) INDIA
(22) Date of filing of Application :04/04/2012
(43) Publication Date : 05/07/2013

(54) Title of the invention : INSTRUMENT AND METHOD FOR MEASURING THE LOSS FACTOR OF AN ELECTRICAL APPARATUS

(51) International classification :G01R27/26,G01R31/02
(31) Priority Document No :BO2009A000699
(32) Priority Date :28/10/2009
(33) Name of priority country :Italy
(86) International Application No :PCT/IB2010/054860
Filing Date :27/10/2010
(87) International Publication No :WO 2011/051890 A1
(61) Patent of Addition to Application Number :NA
Filing Date :NA
(62) Divisional to Application Number :NA
Filing Date :NA

(71)**Name of Applicant :**
1)TECHIMP TECHNOLOGIES S.R.L.
Address of Applicant :VIA DELL'INDIPENDENZA, 54 40121 BOLOGNA Italy
(72)**Name of Inventor :**
1)SERRA, STEFANO
2)MONTANARI,GIAN CARLO

(57) Abstract :
An instrument (1) for measuring the loss factor of an electrical apparatus (2) having an axially extending elongate geometry, in particular a medium voltage cable, comprises: at least a first and a second sensor (3A, 3B) connectable to the apparatus (2) in a first and a second measuring section (4A, 4B) axially spaced along the apparatus (2) by a predetermined quantity, respectively, and designed to measure respective values of the magnetic field generated outside the apparatus (2) by a load current flowing axially through the apparatus; a processing unit (5) designed to receive the magnetic field values measured by the sensors (3A, 3B) and programmed to derive from them a load loss value as a function of the difference between the measured magnetic field values.

No. of Pages : 21 No. of Claims : 15

(12) PATENT APPLICATION PUBLICATION
(19) INDIA
(22) Date of filing of Application :04/04/2012
(21) Application No.3065/CHENP/2012 A
(43) Publication Date : 05/07/2013

(54) Title of the invention : RADIO BASE STATION APPARATUS, MOBILE TERMINAL APPARATUS AND RADIO COMMUNICATION METHOD

(51) International classification	:H04W24/10,H04B 7/04,H04J11/00
(31) Priority Document No	:2009-231962
(32) Priority Date	:05/10/2009
(33) Name of priority country	:Japan
(86) International Application No	:PCT/JP2010/067435
Filing Date	:05/10/2010
(87) International Publication No	:WO 2011/043328 A1
(61) Patent of Addition to Application Number	:NA
Filing Date	:NA
(62) Divisional to Application Number	:NA
Filing Date	:NA

(71)**Name of Applicant :**
1)NTT DOCOMO, INC.
Address of Applicant :11-1, NAGATACHO 2-CHOME, CHIYODA-KU, TOKYO 100-6150 Japan
(72)**Name of Inventor :**
1)KISHIYAMA, YOSHIHISA
2)TAKEDA, KAZUAKI
3)TAOKA, HIDEKAZU

(57) Abstract :
To use CSI feedback information capable of sufficiently-supporting MU-MIMO transmission and CoMP transmission in LTE-A systems, in a radio communication method of the invention, a radio base station apparatus (200) generates downlink transmission data including a report mode corresponding to a bandwidth to perform feedback of feedback information including channel quality information and spatial channel information, and an extension level of the feedback information, and multiplexes the downlink transmission data and a reference signal for feedback information to transmit to a mobile terminal apparatus (100), and the mobile terminal apparatus (100) receives a downlink signal including the report mode and the extension level, and generates feedback information associated with the report mode and the extension level to transmit to the radio base station apparatus (200).

No. of Pages : 50 No. of Claims : 14

(12) PATENT APPLICATION PUBLICATION
(21) Application No.3066/CHENP/2012 A
(19) INDIA
(22) Date of filing of Application :04/04/2012
(43) Publication Date : 05/07/2013

(54) Title of the invention : BASE STATION APPARATUS, MOBILE STATION APPARATUS AND TRANSMISSION-POWER CONTROL METHOD

(51) International classification	:H04W52/24,H04J99/00, H04W16/28	(71)**Name of Applicant :**
(31) Priority Document No	:2009-231924	**1)NTT DOCOMO, INC.**
(32) Priority Date	:05/10/2009	Address of Applicant :11-1, NAGATACHO 2-CHOME, CHIYODA-KU, TOKYO 100-6150 Japan
(33) Name of priority country	:Japan	(72)**Name of Inventor :**
(86) International Application No	:PCT/JP2010/066416	**1)TAOKA, HIDEKAZU**
Filing Date	:22/09/2010	**2)KAKISHIMA, YUICHI**
(87) International Publication No	:WO 2011/043191 A1	
(61) Patent of Addition to Application Number	:NA	
Filing Date	:NA	
(62) Divisional to Application Number	:NA	
Filing Date	:NA	

(57) Abstract :
To suppress deterioration of throughput characteristics in the entire system even when a plurality of transmission antennas is placed in an indoor environment, abase station apparatus (eNode B) is provided with a power control matrix generating section (508b) that generates a power control matrix (Sx) reflecting average reception power of each of transmission signals from a plurality of transmission antennas (TX#1 to TX#NTX) , a codebook update section (508c) that updates a codebook which beforehand defines a plurality of precoding weights corresponding to the power control matrix (Sx), a precoding weight selecting section (508d) that selects precoding weights that maximize throughput or reception SINR obtained after combining the transmission signals from the updated codebook, and a precoding multiplying section (transmission power control section) (507) that controls transmission power of each of the transmission signals corresponding to the selected precoding weights.

No. of Pages : 55 No. of Claims : 14

(12) PATENT APPLICATION PUBLICATION
(19) INDIA
(22) Date of filing of Application :09/04/2012
(21) Application No.3180/CHENP/2012 A
(43) Publication Date : 05/07/2013

(54) Title of the invention : COMPUTER SYSTEM AND METHOD OF MONITORING COMPUTER SYSTEM

(51) International classification :H04L12/56,H04L12/66
(31) Priority Document No :2009-233888
(32) Priority Date :07/10/2009
(33) Name of priority country :Japan
(86) International Application No :PCT/JP2010/067523
Filing Date :06/10/2010
(87) International Publication No :WO 2011/043366 A1
(61) Patent of Addition to Application Number :NA
Filing Date :NA
(62) Divisional to Application Number :NA
Filing Date :NA

(71)**Name of Applicant :**
1)NEC CORPORATION
Address of Applicant :7-1, SHIBA 5-CHOME, MINATO-KU, TOKYO 108-8001 Japan
(72)**Name of Inventor :**
1)EHARA, KOJI
2)MASUDA, TAKAHISA

(57) Abstract :
A computer system according to the present invention has: a switch configured to forward a received packet data to a destination in accordance with flow that is set in the switch; and a control1 er configured to set flow with respect to the switch, in response to first-packet receipt notification from the switch. The switch transmits the first-packet receipt notification to the controller and notifies the controller of a port number included in the received packet data. The controller obtains, from a server, an application name of an application using the port number and records, on a memory device, a correspondence relationship between the application name and the flow that is set with respect to the switch. It is thus possible to monitor statistical information with respect to each application, without being affected by a method of allocating port numbers to applications.

No. of Pages : 64 No. of Claims : 13

(12) PATENT APPLICATION PUBLICATION
(21) Application No.2980/CHENP/2012 A
(19) INDIA
(22) Date of filing of Application :02/04/2012
(43) Publication Date : 05/07/2013

(54) Title of the invention : ANTIMICROBIAL AND VULNERARY ACTION PHARMACEUTICAL COMPOSITION FOR EXTERNAL APPLICATION AND ITS PRODUCTION PROCESS

(51) International classification	:A61K 31/665,A61K 47/04,A61K 9/14
(31) Priority Document No	:201001506
(32) Priority Date	:20/09/2010
(33) Name of priority country	:Russia
(86) International Application No	:PCT/RU2011/000322
Filing Date	:11/05/2011
(87) International Publication No	:WO/2012/039642
(61) Patent of Addition to Application Number	:NA
Filing Date	:NA
(62) Divisional to Application Number	:NA
Filing Date	:NA

(71)**Name of Applicant :**
1)LIMONOV, VIKTOR LVOVICH
Address of Applicant :RUSSIAN FEDERATION, 121374, MOSCOW Russia
(72)**Name of Inventor :**
1)GAIDUL, KONSTANTIN VALENTINOVICH
2)DUSHKIN, ALEKSANDR VALEREVICH

(57) Abstract :
This invention is related to pharmacology, medicine, veterinary science and pharmaceutical industry. It particularly belongs to original composite antimicrobial and vulnerary preparations for external administration production process, which poses a higher therapeutic efficiency in case of skin and soft tissues infections treatment. Proposed pharmaceutical compositions active agents are fosfomicin and finely dispersed nanostructured silica dioxide. The mentioned pharmaceutical composition production process includes mixing fosfomicin with finely dispersed nanostructured silica dioxide. Its main difference is that the mentioned substances mixture with weight ratio (25-75 mass.%) : (75-25 mass.%) respectively is being exposed to mechanical processing by impact and abrasive actions until fine powder fraction weight proportion increase (< 5 micron) and becomes not less than 40%.

No. of Pages : 12 No. of Claims : 4

(12) PATENT APPLICATION PUBLICATION
(21) Application No.3077/CHENP/2012 A
(19) INDIA
(22) Date of filing of Application :04/04/2012
(43) Publication Date : 05/07/2013

(54) Title of the invention : PARTITION SYSTEM

(51) International classification :E04B2/74
(31) Priority Document No :10 2009 040 699.9
(32) Priority Date :09/09/2009
(33) Name of priority country :Germany
(86) International Application No :PCT/DE2010/001059
Filing Date :09/09/2010
(87) International Publication No :WO 2011/029431 A1
(61) Patent of Addition to Application Number :NA
Filing Date :NA
(62) Divisional to Application Number :NA
Filing Date :NA

(71)**Name of Applicant :**
1)HERMAN MILLER, INC.
Address of Applicant :855 EAST MAIN AVENUE, ZEELAND, MICHIGAN 49464 U.S.A.
(72)**Name of Inventor :**
1)PLIKAT, CLAUDIA
2)SCHMITZ, BURKHARD
3)ZWICK, CAROLA
4)ZWICK, ROLAND

(57) Abstract :
The invention relates to a partition system (10) comprising a plurality of wall elements (1) merging one into another, wherein at least one wall element (1) is designed as a stepped element (150), and wherein at least one wall element (1) is designed as a corner element (250). (Figure 12a)

No. of Pages : 50 No. of Claims : 15

(12) PATENT APPLICATION PUBLICATION
(21) Application No.3078/CHENP/2012 A
(19) INDIA
(22) Date of filing of Application :04/04/2012
(43) Publication Date : 05/07/2013

(54) Title of the invention : ROTARY PISTON PUMP

(51) International classification :F04C2/08,F04C13/00,F04C2/12
(31) Priority Document No :20 2009 012 158.5
(32) Priority Date :08/09/2009
(33) Name of priority country :Germany
(86) International Application No:PCT/EP2010/063179
Filing Date :08/09/2010
(87) International Publication No :WO 2011/029847 A2
(61) Patent of Addition to Application Number :NA
Filing Date :NA
(62) Divisional to Application Number :NA
Filing Date :NA

(71)**Name of Applicant :**
1)HUGO VOGELSANG MASCHINENBAU GMBH
Address of Applicant :HOLTHOGE 10-14, 49632 ESSEN Germany
(72)**Name of Inventor :**
1)KRAMPE, PAUL

(57) Abstract :
The invention relates to a rotary lobe pump for conveying a fluid medium containing solids, said rotary lobe pump comprising two rotary lobes each having rotary lobe vanes engaging with other and each having a rotational axis and an outer periphery, wherein the rotational axes of the two rotary lobes are spaced apart from each other and arranged parallel to each other and wherein the outer peripheries of the two rotary lobes partially intersect each other, and further comprising a housing with an inlet opening and an outlet opening and an inner wall and an outer wall, the inner wall of the housing enclosing a respective section of the outer peripheries of the rotary lobes and wherein the rotary lobe pump is adapted to convey the medium in a feeding direction from the inlet opening to the outlet opening. According to the invention, the rotary lobe pump is characterized in that the outlet opening on the inner wall of the housing has a maximum discharge enlargement that is greater in a direction running parallel to the plane of the rotational axes and perpendicularly to the rotational axes than the distance between the rotational axes.

No. of Pages : 22 No. of Claims : 15

(12) PATENT APPLICATION PUBLICATION
(21) Application No.3186/CHENP/2012 A
(19) INDIA
(22) Date of filing of Application :09/04/2012
(43) Publication Date : 05/07/2013

(54) Title of the invention : MOBILE DEVICE, AND SECURITY LOCK CONTROL METHOD AND PROGRAM THEREOF

(51) International classification	:G06F21/24,G06F21/20 ,G06F 3/041
(31) Priority Document No	:2009-235589
(32) Priority Date	:09/10/2009
(33) Name of priority country	:Japan
(86) International Application No	:PCT/JP2010/067655
Filing Date	:07/10/2010
(87) International Publication No	:WO 2011/043422 A1
(61) Patent of Addition to Application Number	:NA
Filing Date	:NA
(62) Divisional to Application Number	:NA
Filing Date	:NA

(71)**Name of Applicant :**
1)NEC CORPORATION
Address of Applicant :7-1, SHIBA 5-CHOME, MINATO-KU, TOKYO Japan
(72)**Name of Inventor :**
1)SUGIYAMA, KEIICHI

(57) Abstract :
Provided are a mobile device and a security lock control method and program for this device, by which, while time and effort of a user at the time of user authentication can be reduced, unauthorized use and incorrect operation can be effectively prevented. A combination of touch operations such as touch, drag, release, tap, flick, and the like entered onto a touch panel by a user is specified whole a security lock processing module is in a state where the security lock function is on, the specified combination of touch operations is collated with a combination indicated by preset authentication information, and when they match, the security lock function is released.

No. of Pages : 29 No. of Claims : 10

(12) PATENT APPLICATION PUBLICATION
(19) INDIA
(22) Date of filing of Application :04/04/2012
(21) Application No.3074/CHENP/2012 A
(43) Publication Date : 05/07/2013

(54) Title of the invention : DEVICE FOR INTERACTION WITH AN AUGMENTED OBJECT

(51) International classification :H04L 12/28
(31) Priority Document No :0956914
(32) Priority Date :05/10/2009
(33) Name of priority country :France
(86) International Application No :PCT/FR2010/051837
Filing Date :03/09/2010
(87) International Publication No :WO 2011/042632 A1
(61) Patent of Addition to Application Number :NA
Filing Date :NA
(62) Divisional to Application Number :NA
Filing Date :NA

(71)**Name of Applicant :**
1)ALCATEL LUCENT
Address of Applicant :3, AVENUE OCTAVE GREARD, F-75007 PARIS France
(72)**Name of Inventor :**
1)PASTOR, ALAIN
2)JEAN, JOSE

(57) Abstract :
A device for interacting with at least one augmented object (3), where the augmented object (3) comprises a physical object (6) and an associated virtual object (7) , said virtual object (7) comprising at least one service definition element, where it is possible to connect to the augmented object (3) via a first means of communication, said device comprising: - A means of video capture (8), - A user terminal (12), - An automatic means of identifying the augmented object (3), - A means of communication (10), capable of establishing a connection between the device and the identified augmented object (3), and to recover said service definition elements, - A means of defining a control interface for the services of the identified augmented object (3) according to said service definition elements, - A reader, capable of reading the commands, in relation to said control interface, - A means of communication (17), to transmit said commands to the augmented object (3) for execution.

No. of Pages : 22 No. of Claims : 14

(12) PATENT APPLICATION PUBLICATION
(19) INDIA
(22) Date of filing of Application :09/04/2012
(21) Application No.3175/CHENP/2012 A
(43) Publication Date : 05/07/2013

(54) Title of the invention : USE OF GUAIFENESIN FOR INHIBITING MUCIN SECRETION

(51) International classification :A61K31/09,A61P11/12
(31) Priority Document No :12/558,517
(32) Priority Date :12/09/2009
(33) Name of priority country :U.S.A.
(86) International Application No :PCT/GB2010/051525
Filing Date :13/09/2010
(87) International Publication No :WO 2011/030163 A1
(61) Patent of Addition to Application Number :NA
Filing Date :NA
(62) Divisional to Application Number :NA
Filing Date :NA

(71)**Name of Applicant :**
1)RECKITT BENCKISER LLC
Address of Applicant :MORRIS CORPORATE CENTER IV, 399 INTERPACE PARKWAY, PARISIPPANY, NEW JERSEY 07054 U.S.A.
(72)**Name of Inventor :**
1)ALBRECHT, HELMUT
2)KIM, K. CHUL
3)RUBIN, BRUCE K.
4)SEAGRAVE, JEANCLARE
5)SOLOMON, GAIL

(57) Abstract :
A method of inhibiting mucus secretion in an individual that includes administering an effective amount of a composition which comprises guaifenesin.

No. of Pages : 20 No. of Claims : 35

(12) PATENT APPLICATION PUBLICATION
(21) Application No.3176/CHENP/2012 A
(19) INDIA
(22) Date of filing of Application :09/04/2012
(43) Publication Date : 05/07/2013

(54) Title of the invention : ANTISTATIC POLYCARBONATE RESIN COMPOSITION AND MOLDED ARTICLE THEREOF

(51) International classification :C08L69/00,C08K5/16,C08K5/42
(31) Priority Document No :2009-235186
(32) Priority Date :09/10/2009
(33) Name of priority country :Japan
(86) International Application No :PCT/JP2010/068101
Filing Date :07/10/2010
(87) International Publication No :WO 2011/043492 A1
(61) Patent of Addition to Application Number :NA
Filing Date :NA
(62) Divisional to Application Number :NA
Filing Date :NA

(71)**Name of Applicant :**
1)TEIJIN CHEMICALS LTD.
Address of Applicant :2-1, KASUMIGASEKI 3-CHOME, CHIYODA-KU, TOKYO 100-0013 Japan
(72)**Name of Inventor :**
1)TAKAHASHI, DAISUKE
2)KOGA, TAKASHI
3)IBUSUKI, SHUN

(57) Abstract :
An antistatic polycarbonate resin composition which is excellent in antistatic properties, weather resistance, color, molding heat resistance, transparency and impact resistance, and a molded article thereof. The resin composition comprises (A) 100 parts by weight of a polycarbonate resin (component A), (B) 0.01 to 4 parts by weight of a low-molecular weight sulfonate (component B) , and (C) 0.05 to 3 parts by weight of an ultraviolet absorbent (component C), wherein the component C is at least one compound selected from the group consisting of a benzotriazole-based compound, a benzotriazine-based compound, a benzoxazine-based compound, a 2-cyanoacrylic acid-based compound and a benzophenone-based compound and having a 10 % weight loss temperature in TGA (thermogravimetric analysis) of 280° C or higher.

No. of Pages : 118 No. of Claims : 16

(12) PATENT APPLICATION PUBLICATION
(19) INDIA
(22) Date of filing of Application :09/04/2012
(21) Application No.3177/CHENP/2012 A
(43) Publication Date : 05/07/2013

(54) Title of the invention : DETECTION OF MYCOBACTERIA

(51) International classification :A61K31/351,A61K49/06,A61K51/00
(31) Priority Document No :61/241,741
(32) Priority Date :11/09/2009
(33) Name of priority country :U.S.A.
(86) International Application No :PCT/GB2010/051519
Filing Date :10/09/2010
(87) International Publication No :WO 2011/030160 A1
(61) Patent of Addition to Application Number :NA
Filing Date :NA
(62) Divisional to Application Number :NA
Filing Date :NA

(71)**Name of Applicant :**
1)ISIS INNOVATION LIMITED
Address of Applicant :EWERT HOUSE, EWERT PLACE, SUMMERTOWN, OXFORD OX2 7SG U.K.
2)THE GOVERNMENT OF THE UNITED STATES AS REPRESENTED BY THE DEPARTMENT OF HEALTH AND HUMAN SERVICES
(72)**Name of Inventor :**
1)BACKUS, KERIANN MARIE
2)DAVIS, BENJAMIN OF UNIVERSITY
3)BARRY III, CLIFTON B.
4)BOSHOFF, HELENA

(57) Abstract :
A method for determining the presence of mycobacteria species in an organism or biological sample, the method comprising adding to the organism or biological sample a probe molecule comprising a substrate and a label, which probe molecule can be incorporated into mycobacteria, a presence of mycobacteria being determined by a detector responsive to the presence of the label, optionally after applying a stimulus; suitable probe molecules include compounds comprising a label and a substrate, which label is can be detected by a detector responsive to the presence of the label, optionally after applying a stimulus, charcterised by compound being able to engage with the active site of Antigen 85B (Ag85B) such that it can form simultaneous hydrogen bonds with two or more amino acids in the active site selected from Arg 43, Trp 264, Serl26, His 262 and Leu 42, or the corresponding amino acids in Antigen 85 A (Ag85A) or Antigen 85C (Ag85C), at least one of which is with Serl26.

No. of Pages : 126 No. of Claims : 17

(12) PATENT APPLICATION PUBLICATION
(19) INDIA
(22) Date of filing of Application :09/04/2012
(21) Application No.3178/CHENP/2012 A
(43) Publication Date : 05/07/2013

(54) Title of the invention : STERILIZATION APPARATUS AND METHOD FOR CONTROLLING OF A STERILIZATION APPARATUS

(51) International classification :A61L2/06,A61L2/24,B65B55/06
(31) Priority Document No :09172650.5
(32) Priority Date :09/10/2009
(33) Name of priority country :EPO
(86) International Application No :PCT/EP2010/065098
Filing Date :08/10/2010
(87) International Publication No :WO 2011/042541 A1
(61) Patent of Addition to Application Number :NA
Filing Date :NA
(62) Divisional to Application Number :NA
Filing Date :NA

(71)**Name of Applicant :**
1)SANOFI-AVENTIS DEUTSCHLAND GMBH
Address of Applicant :BRUNINGSTRASSE 50, D-65929 FRANKFURT AM MAIN Germany
(72)**Name of Inventor :**
1)HUEFNER, GERHARD
2)HENRICH, MATTHIAS
3)WILLEMS, MICHAEL

(57) Abstract :
The invention relates to a sterilization apparatus (10) and to a method for the sterilization of an object (7) by a gaseous or liquid fluid comprising: a sterilization chamber (8) in which the object (7) is positioned, at least an acceleration device (2) for accelerating the fluid to a predetermined flow-speed, at least a filter device (3) for separating particles from the fluid, characterized in that the sterilization apparatus further comprises at least an orifice device (4) providing a plurality of openings, and a control apparatus for determining the flow-speed of the fluid on the basis of a pressure difference (Δp).

No. of Pages : 22 No. of Claims : 15

(12) PATENT APPLICATION PUBLICATION
(21) Application No.3071/CHENP/2012 A
(19) INDIA
(22) Date of filing of Application :04/04/2012
(43) Publication Date : 05/07/2013

(54) Title of the invention : METHOD FOR PREPARING A COMPOSITION COMPRISING A COMPOUND BASED ON VANILLIN AND ETHYL VANILLIN, RESULTING COMPOSITION AND USES THEREOF

(51) International classification	:C07C47/58,A23L1/226,A61K47/08
(31) Priority Document No	:09 04810
(32) Priority Date	:08/10/2009
(33) Name of priority country	:France
(86) International Application No	:PCT/EP2010/064641
Filing Date	:01/10/2010
(87) International Publication No	:WO 2011/042365 A1
(61) Patent of Addition to Application Number	:NA
Filing Date	:NA
(62) Divisional to Application Number	:NA
Filing Date	:NA

(71)**Name of Applicant :**
1)RHODIA OPERATIONS
Address of Applicant :40, RUE DE LA HAIE COQ, F-93300 AUBERVILLIERS France
(72)**Name of Inventor :**
1)LETHIESSE, JEAN-CLAUDE
2)LAMIRI, KILANI

(57) Abstract :
The present invention relates to a method for preparing a composition comprising essentially a compound based on vanillin and ethyl vanillin. The invention also relates to the resulting composition and the uses thereof in many fields of application, in particular in human and animal food. The method of the invention for preparing a composition comprising essentially a compound based on vanillin and ethyl vanillin in a vanillin/ethyl vanillin molar ration of 2 is characterized in that it comprises: a step consisting in melting a mixture of vanillin and ethyl vanillin, which are used in a molar ratio other than 2, with an excess of vanillin representing from 2% to 20% of the weight of the mixture; a step consisting in solidifying same, by cooling to a temperature of less than or equal to 50°C ± 1°C; and a step consisting in recovering the resulting composition comprising the new compound.

No. of Pages : 47 No. of Claims : 23

(12) PATENT APPLICATION PUBLICATION
(19) INDIA
(22) Date of filing of Application :09/04/2012
(21) Application No.3170/CHENP/2012 A
(43) Publication Date : 05/07/2013

(54) Title of the invention : CROSS-FLOW FAN, MOLDING DIE, AND FLUID FEEDER

(51) International classification :F04D17/04,F04D29/66
(31) Priority Document No :2009-210465
(32) Priority Date :11/09/2009
(33) Name of priority country :Japan
(86) International Application No :PCT/JP2010/065302
Filing Date :07/09/2010
(87) International Publication No :WO 2011/030749 A1
(61) Patent of Addition to Application Number :NA
Filing Date :NA
(62) Divisional to Application Number :NA
Filing Date :NA

(71)**Name of Applicant :**
1)SHARP KABUSHIKI KAISHA
Address of Applicant :22-22, NAGAIKE-CHO, ABENO-KU, OSAKA-SHI, OSAKA 545-8522 Japan
(72)**Name of Inventor :**
1)SHIRAICHI, YUKISHIGE
2)OHTSUKA, MASAKI

(57) Abstract :
Disclosed is a cross-flow fan (10) where an inner diameter (d) and an outer diameter (D) of a fan blade (21) meet the relationship expressed by $0.55 < d/D < 0.95$. In cross-flow fan (10), (N) representing number of fan blades (21), a chord length (L) and outer diameter (D) of fan blades (21), and (M) representing number of blade wheels (12) meet the relationships expressed by of $0.6 < L/(\pi D/N) < 2.8$ and $0.15 < TTD/(N X M) < 3.77$. A plurality of blade wheels (12) are stacked on each other in a manner that a displacement angle (0) is generated within the range of (1.2 x 3607(N x M)) < 0 < (360°/N) between adjacent blade wheels (12). The displacement angle (0) is set so that the overlapping number of fan blades (21) having an equal installation angle is at most 5% of N x M representing a total number of fan blades (21). The present invention can provide a cross-flow fan that can succeed in noise reduction, a molding die used to produce the cross-flow fan, and a fluid feeder equipped with the cross-flow fan.

No. of Pages : 51 No. of Claims : 12

(12) PATENT APPLICATION PUBLICATION
(21) Application No.3173/CHENP/2012 A
(19) INDIA
(22) Date of filing of Application :09/04/2012
(43) Publication Date : 05/07/2013

(54) Title of the invention : A POLYMER WASHOUT SOLVENT, AND THE USE THEREOF FOR DEVELOPING A FLEXOGRAPHIC PRINTING PLATE

(51) International classification :G03F7/32
(31) Priority Document No :09172718.0
(32) Priority Date :09/10/2009
(33) Name of priority country :EPO
(86) International Application No :PCT/EP2010/058008
Filing Date :08/06/2010
(87) International Publication No :WO 2011/042225 A1
(61) Patent of Addition to Application Number :NA
Filing Date :NA
(62) Divisional to Application Number :NA
Filing Date :NA

(71)**Name of Applicant :**
1)FLEXOCLEAN ENGINEERING B.V.
Address of Applicant :BLIEK 8, NL-4941 SG, RAAMSDONKSVEER Netherlands
(72)**Name of Inventor :**
1)AYDOGAN, FIGEN

(57) Abstract :
A polymer washout solvent for developing a flexographic printing plate comprising: -an ester hydrocarbon component, an ether hydrocarbon component, - an alcoholic hydrocarbon component. The washout solvent of the invention has less hazardous properties than the known solvents. Use of a polymer washout solvent for developing a flexographic printing plate in a washing step.

No. of Pages : 11 No. of Claims : 9

(12) PATENT APPLICATION PUBLICATION
(19) INDIA
(22) Date of filing of Application :09/04/2012
(21) Application No.3174/CHENP/2012 A
(43) Publication Date : 05/07/2013

(54) Title of the invention : METHOD FOR IMPROVED POLYSTER RESIN BLENDS FOR OXYGEN SCAVENGING AND PRODUCTS THEREOF

(51) International classification	:C08G63/78,B01J20/26,C08G63/12
(31) Priority Document No	:61/241,591
(32) Priority Date	:11/09/2009
(33) Name of priority country	:U.S.A.
(86) International Application No	:PCT/US2010/048370
Filing Date	:10/09/2010
(87) International Publication No	:WO 2011/031929 A3
(61) Patent of Addition to Application Number	:NA
Filing Date	:NA
(62) Divisional to Application Number	:NA
Filing Date	:NA

(71)**Name of Applicant :**
1)INVISTA TECHNOLOGIES S.A.R.L.
Address of Applicant :ZWEIGNIEDERLASSUNG ST. GALLEN, PESTALOZZISTRASSE 2, 9000 ST. GALLEN Switzerland
(72)**Name of Inventor :**
1)ROODVOETS, MARK, RYAN
2)EMBS, FRANK, WILHELM

(57) Abstract :
Disclosed is a method for producing an oxygen scavenging resin comprising: a) reacting an aromatic diacid or its diester, and an ionic diacid or its diester, with a diol and a metal compound to produce an ionic copolyester, b) cooling, cutting and drying the ionic copolyester into solid pellets, and c) mixing the dried ionic copolyester with a dried oxidizable polymer, provided that the oxidizable polymer is not a partially aromatic polyamide. Also disclosed is i) a composition made by the above method wherein the composition comprises an ionic copolyester, containing a metal compound, and an oxidizable polymer, provided that the oxidizable polymer is not a partially aromatic polyamide; and ii) the method of making articles from this composition.

No. of Pages : 23 No. of Claims : 31

(12) PATENT APPLICATION PUBLICATION
(19) INDIA
(22) Date of filing of Application :02/04/2012
(21) Application No.2982/CHENP/2012 A
(43) Publication Date : 05/07/2013

(54) Title of the invention : FLAVOUR ENHANCEMENT

(51) International classification :A23L1/22,A23L1/226, A23L1/228
(31) Priority Document No :0917325.3
(32) Priority Date :02/10/2009
(33) Name of priority country :U.K.
(86) International Application No :PCT/EP2010/064622
Filing Date :01/10/2010
(87) International Publication No :WO 2011/039340 A3
(61) Patent of Addition to Application Number :NA
Filing Date :NA
(62) Divisional to Application Number :NA
Filing Date :NA

(71)**Name of Applicant :**
1)GIVAUDAN SA
Address of Applicant :CHEMIN DE LA PARFUMERIE 5, CH-1214 VERNIER Switzerland
(72)**Name of Inventor :**
1)HAIBER, STEPHAN
2)RENES, HARRY

(57) Abstract :
A method of providing umami taste to a consumable composition, comprising the addition to the composition of monosodium glutamate, in which the proportion of monosodium glutamate that would normally be used is reduced and replaced with a compensatory proportion of γ-amino butyric acid. A substantial reduction in MSG content is made possible.

No. of Pages : 10 No. of Claims : 7

(12) PATENT APPLICATION PUBLICATION
(21) Application No.2983/CHENP/2012 A
(19) INDIA
(22) Date of filing of Application :02/04/2012
(43) Publication Date : 05/07/2013

(54) Title of the invention : PROCESS FOR THE PREPARATION OF EXPANDABLE VINYL AROMATIC POLYMERS WITH A REDUCED THERMAL CONDUCTIVITY BY POLYMERIZATION IN SUSPENSION

(51) International classification	:C08J9/00, C08J9/20, C08K5/02
(31) Priority Document No	:MI2009A001543
(32) Priority Date	:07/09/2009
(33) Name of priority country	:Italy
(86) International Application No	:PCT/IB2010/001983
Filing Date	:06/08/2010
(87) International Publication No	:WO 2011/027196 A1
(61) Patent of Addition to Application Number	:NA
Filing Date	:NA
(62) Divisional to Application Number	:NA
Filing Date	:NA

(71)**Name of Applicant :**
1)POLIMERI EUROPA S.P.A.
Address of Applicant :PIAZZA BOLDRINI, 1, I-20097 SAN DONATO MILANESE(MILANO) Italy
(72)**Name of Inventor :**
1)GHIDONI, DARIO
2)SIMONELLI, ALESSANDRA
3)PONTICIELLO, ANTONIO
4)LA PICCIRELLA, ANDREA

(57) Abstract :
Process for the preparation of beads of expandable vinyl aromatic polymers by means of polymerization in aqueous suspension, which comprises polymerizing at least one vinyl aromatic monomer in aqueous suspension in the presence of a peroxide initiator system, active at a temperature higher than 80°C, an expanding agent, and in the presence of: - an amide having the general formula R1CONHCH2-CH2NHCOR2 (I) a flame-retardant system comprising a brominated additive with a bromine content higher than 3 0% by weight.

No. of Pages : 24 No. of Claims : 11

(12) PATENT APPLICATION PUBLICATION
(19) INDIA
(22) Date of filing of Application :02/04/2012
(21) Application No.2984/CHENP/2012 A
(43) Publication Date : 05/07/2013

(54) Title of the invention : METHOD FOR SEPARATING SALIFIED PHENOLIC COMPOUNDS

(51) International classification	:C07C41/36,C07C43/295,C07C51/47
(31) Priority Document No	:09 04701
(32) Priority Date	:02/10/2009
(33) Name of priority country	:France
(86) International Application No	:PCT/EP2010/064602
Filing Date	:30/09/2010
(87) International Publication No	:WO 2011/039331 A1
(61) Patent of Addition to Application Number	:NA
Filing Date	:NA
(62) Divisional to Application Number	:NA
Filing Date	:NA

(71)**Name of Applicant :**
1)RHODIA OPERATIONS
Address of Applicant :40, RUE DE LA HAIE COQ. F-93300 AUBERVILLIERS France
(72)**Name of Inventor :**
1)DESOUHANT-MASSACRET, MAGALI

(57) Abstract :
The present invention to a method of separating phenolic compounds in salified form from an aqueous reaction mixture resulting from the reaction of a phenolic compound and glyoxylic acid in the presence of a base, leading to a reaction mixture comprising at least the excess of phenolic starting compound in salified form and the various mandelic compounds in salified form, resulting from the reaction, characterized in that said reaction mixture comprising the phenolic starting compound in salified form is contacted with an adsorbent support, leading to the selective adsorption of said phenolic compound on said support, and to the recovery of an aqueous stream comprising the mandelic compounds in salified form obtained from the reaction, and in that the phenolic compound fixed on the adsorbent is desorbed by a regenerative treatment of said adsorbent.

No. of Pages : 30 No. of Claims : 17

(12) PATENT APPLICATION PUBLICATION
(19) INDIA
(22) Date of filing of Application :02/04/2012
(21) Application No.2985/CHENP/2012 A
(43) Publication Date : 05/07/2013

(54) Title of the invention : EASY MAINTENANCE HYDRAULIC TURBINE ENGINE

(51) International classification :F03B13/26
(31) Priority Document No :0956120
(32) Priority Date :09/09/2009
(33) Name of priority country :France
(86) International Application No :PCT/FR2010/051883
Filing Date :09/09/2010
(87) International Publication No :WO 2011/030067 A1
(61) Patent of Addition to Application Number :NA
Filing Date :NA
(62) Divisional to Application Number :NA
Filing Date :NA

(71)**Name of Applicant :**
1)ELECTRICITE DE FRANCE
Address of Applicant :22-30, AVENUE DE WAGRAM, 75008, PARIS-75008 France
2)HYDROQUEST
(72)**Name of Inventor :**
1)JAQUIER, THOMAS
2)ACHARD, JEAN-LUC
3)ZANETTE, JERONIMO

(57) Abstract :
The invention relates to a hydraulic turbine engine comprising, between a seat (11) and a succession of turbine stages (1-4) associated with atleast one generator, a guiding block (6) secured to the lower stage of the turbine engine and nested on the seat, said guiding block containing winders for guiding cables (15), the ends of which are secured to the seat.

No. of Pages : 27 No. of Claims : 10

(12) PATENT APPLICATION PUBLICATION
(19) INDIA
(22) Date of filing of Application :09/04/2012
(21) Application No.3190/CHENP/2012 A
(43) Publication Date : 05/07/2013

(54) Title of the invention : KEY CERTIFICATION IN ONE ROUND TRIP

(51) International classification :H04L9/14
(31) Priority Document No :12/607,937
(32) Priority Date :28/10/2009
(33) Name of priority country :U.S.A.
(86) International Application No :PCT/US2010/050285
Filing Date :24/09/2010
(87) International Publication No :WO 2011/056321 A3
(61) Patent of Addition to Application Number :NA
Filing Date :NA
(62) Divisional to Application Number :NA
Filing Date :NA

(71)**Name of Applicant :**
1)MICROSOFT CORPORATION
Address of Applicant :ONE MICROSOFT WAY, REDMOND, WASHINGTON 98052-6399 U.S.A.
(72)**Name of Inventor :**
1)THOM, STEFAN
2)ANDERSON, SCOTT D.
3)HOLT, ERIK, L.

(57) Abstract :
Certification of a key, which a Trusted Platform Module (TPM) has attested as being non-migratable, can be performed in a single round trip between the certificate authority (CA) and the client that requests the certificate. The client creates a certificate request, and then has the TPM create an attestation identity key (AK) that is bound to the certificate request. The client then asks the TPM to sign the new key as an attestation of non-migratability. The client then sends the certificate request, along with the attestation of non-migratability to the CA. The CA examines the certificate request and attestation of non-migratability. However, since the CA does not know whether the attestation has been made by a trusted TPM, it certifies the key but includes, in the certificate, an encrypted signature that can only be decrypted using the endorsement key of the trusted TPM.

No. of Pages : 32 No. of Claims : 15

(12) PATENT APPLICATION PUBLICATION
(21) Application No.3191/CHENP/2012 A
(19) INDIA
(22) Date of filing of Application :09/04/2012
(43) Publication Date : 05/07/2013

(54) Title of the invention : ASSEMBLING STREAMED CONTENT FOR ON-DEMAND PRESENTATION

(51) International classification :G06F19/00G06F 15/16G06Q 50/00
(31) Priority Document No :12/608,447
(32) Priority Date :29/10/2009
(33) Name of priority country :U.S.A.
(86) International Application No :PCT/US2010/053634
Filing Date :21/10/2010
(87) International Publication No :WO 2011/059657 A3
(61) Patent of Addition to Application Number :NA
Filing Date :NA
(62) Divisional to Application Number :NA
Filing Date :NA

(71)**Name of Applicant :**
1)MICROSOFT CORPORATION
Address of Applicant :ONE MICROSOFT WAY, REDMOND, WASHINGTON 98052-6399 U.S.A.
(72)**Name of Inventor :**
1)BOCHAROV, JOHN A.
2)SIMMONS, JOHN C.
3)HUGHES, ROBERT K.
4)SIRIVARA, SUDHEER
5)FINKELSTEIN, CHARLES A.

(57) Abstract :
Assembling streamed content for on-demand presentation is described. In embodiments, a media asset can be requested from a content distributor, and cacheable segments of the media asset are streamed to the requesting client device. The cacheable segments are received in an initial quality display format for uninterrupted playback of the media asset at the client device while the cacheable segments are being received. An asset matrix that correlates a bit rate and time position for each cacheable segment in the media asset is also received. The cacheable segments of the media asset can be assembled according to the asset matrix to generate an assembled asset data file of the media asset. The assembled asset data file can then be back-filled with selected ones of the cacheable segments that are replaced with a highest quality display format for on-demand presentation of the media asset when selected for viewing. FIG.1

No. of Pages : 30 No. of Claims : 15

(12) PATENT APPLICATION PUBLICATION
(19) INDIA
(22) Date of filing of Application :09/04/2012
(21) Application No.3192/CHENP/2012 A
(43) Publication Date : 05/07/2013

(54) Title of the invention : LOCATION INTEGRATION IN SOFTWARE DEFINED RADIO

(51) International classification	:H04W4/02H04W 88/02
(31) Priority Document No	:12/608,563
(32) Priority Date	:29/10/2009
(33) Name of priority country	:U.S.A.
(86) International Application No	:PCT/US2010/050289
Filing Date	:24/09/2010
(87) International Publication No	:WO 2011/059577 A3
(61) Patent of Addition to Application Number	:NA
Filing Date	:NA
(62) Divisional to Application Number	:NA
Filing Date	:NA

(71)**Name of Applicant :**
1)MICROSOFT CORPORATION
Address of Applicant :ONE MICROSOFT WAY, REDMOND, WASHINGTON 98052-6399 U.S.A.
(72)**Name of Inventor :**
1)HASSAN, AMER, A.
2)SHEN, HUI
3)ANDERS, BILLY, R., JR

(57) Abstract :
A computing device having a software defined radio (SDR) wireless network interface is automatically configured to support a wireless service in response to a request from the user to access the service. The computing device may determine the appropriate profile and obtain it by querying a remote database. The query may indicate the computing devices current location, though location information may alternatively be determined by a server coupled to the database. The communication profile is downloaded from the remote database using an existing or available network connection. The software defined radio is configured with the communication profile and is used to access an available wireless service. Content obtained from the wireless service is presented through a user interface of the computing device.

No. of Pages : 33 No. of Claims : 15

(12) PATENT APPLICATION PUBLICATION
(19) INDIA
(22) Date of filing of Application :09/04/2012
(21) Application No.3193/CHENP/2012 A
(43) Publication Date : 05/07/2013

(54) Title of the invention : POLYPEPTIDES FOR BINDING TO THE RECEPTOR FOR ADVANCED GLYCATION ENDPRODUCTS AS WELL AS COMPOSITIONS AND METHODS INVOLVING THE SAME

(51) International classification	:C07K16/28A61K 38/00
(31) Priority Document No	:09290778.1
(32) Priority Date	:09/10/2009
(33) Name of priority country	:EPO
(86) International Application No	:PCT/EP2010/065124
Filing Date	:08/10/2010
(87) International Publication No	:WO 2011/042548 A1
(61) Patent of Addition to Application Number	:NA
Filing Date	:NA
(62) Divisional to Application Number	:NA
Filing Date	:NA

(71)**Name of Applicant :**
1)SANOFI
Address of Applicant :54, RUE LA BOETIE, 75008, PARIS France
(72)**Name of Inventor :**
1)HUBER, JOCHEN
2)BLANCHE, FRANCIS
3)DABDOUBI, TARIK
4)SOUBRIER, FABIENNE

(57) Abstract :
The present invention relates to a polypeptide or polypeptide complex comprising at least the two amino acid sequences arranged to allow for specific binding to the receptor for advanced glycation endproducts (RAGE), one or more nucleic acid(s) coding for the polypeptide or polypeptide complex, a cell producing an antibody against RAGE, a pharmaceutical composition comprising at least one polypeptide or nucleic as defined above, optionally for treating a RAGE-related disease or disorder and a method of diagnosing a RAGE-related disease or disorder.

No. of Pages : 77 No. of Claims : 15

(12) PATENT APPLICATION PUBLICATION
(21) Application No.3194/CHENP/2012 A
(19) INDIA
(22) Date of filing of Application :09/04/2012
(43) Publication Date : 05/07/2013

(54) Title of the invention : METHODS AND MATERIALS FOR MODULATING DEUBIQUITINASES AND UBIQUITINATED POLYPEPTIDES

(51) International classification	:A61K38/16A61K 31/7105A61K 38/17A61P35/00	(71)**Name of Applicant :** **1)MAYO FOUNDATION FOR MEDICAL EDUCATION AND RESEARCH** Address of Applicant :200 FIRST STREET S.W., ROCHESTER, MINNESOTA 55905 U.S.A.
(31) Priority Document No	:61/241,152	
(32) Priority Date	:10/09/2009	
(33) Name of priority country	:U.S.A.	(72)**Name of Inventor :** **1)LOU, ZHENKUN** **2)YUAN, JIAN**
(86) International Application No	:PCT/US2010/048302	
Filing Date	:09/09/2010	
(87) International Publication No	:WO 2011/031884 A3	
(61) Patent of Addition to Application Number	:NA	
Filing Date	:NA	
(62) Divisional to Application Number	:NA	
Filing Date	:NA	

(57) Abstract :
This document relates to methods and materials involved in modulating deubiquitinases (e.g., USP10 polypeptides) and/or ubiquitinated polypeptides (e.g., tumor suppressor polypeptides or mutant versions of tumor suppressor polypeptides). For example, methods and materials for increasing deubiquitinase (e.g., a USP10 polypeptide) expression or activity, methods and materials for decreasing deubiquitinase (e.g., a USP10 polypeptide) expression or activity, methods and materials for stabilizing tumor suppressor polypeptides (e.g., wild-type p53 polypeptides), methods and materials for de-stabilizing mutant versions of tumor suppressor polypeptides (e.g., mutant p53 polypeptides), and methods and materials for reducing cancer cell proliferation, increasing cancer cell apoptosis, and/or treating cancer (e.g., cancers having reduced levels of wild-type p53 polypeptides or cancers having increased levels of mutant p53 polypeptides) are provided. This document also provides methods and materials for identifying agonists or antagonists of USP10 polypeptide mediated stabilization of p53 polypeptides.

No. of Pages : 86 No. of Claims : 11

(12) PATENT APPLICATION PUBLICATION
(19) INDIA
(22) Date of filing of Application :02/04/2012
(21) Application No.3011/CHENP/2012 A
(43) Publication Date : 05/07/2013

(54) Title of the invention : MOTOR DRIVE APPARATUS FOR VEHICLE AND MOTOR VEHICLE

(51) International classification	:F16H3/10,B60K17/356, B60K6/36
(31) Priority Document No	:2009-207191
(32) Priority Date	:08/09/2009
(33) Name of priority country	:Japan
(86) International Application No	:PCT/JP2010/064442
Filing Date	:26/08/2010
(87) International Publication No	:WO 2011/030670 A1
(61) Patent of Addition to Application Number	:NA
Filing Date	:NA
(62) Divisional to Application Number	:NA
Filing Date	:NA

(71)**Name of Applicant :**
1)NTN CORPORATION
Address of Applicant :3-17, KYOMACHIBORI 1-CHOME, NISHI-KU, OSAKA-SHI, OSAKA Japan
(72)**Name of Inventor :**
1)MAKINO, TOMOAKI

(57) Abstract :
A motor drive apparatus for a vehicle is provided which can prevent its transmission and motor from being rotated by vehicle wheels, and which allows quick gear change. This apparatus includes an electric motor (10), a first shaft (21) driven by the electric motor (10), a second shaft (22), first and second reduction gear trains (23 and 24) disposed between the first and second shafts (21 and 22). Two-way roller clutches (30A and 30B) are mounted between a first output gear (23b) of the first reduction gear train (23) and the second shaft (22) and between a second output gear (24b) of the second reduction gear train (24) and the second shaft (22), respectively. Gear changes are made by selectively engaging and disengaging the two-way roller clutches (30A and 30B) with a speed changing mechanism (50).

No. of Pages : 53 No. of Claims : 17

(12) PATENT APPLICATION PUBLICATION
(21) Application No.3012/CHENP/2012 A
(19) INDIA
(22) Date of filing of Application :02/04/2012
(43) Publication Date : 05/07/2013

(54) Title of the invention : STEEL FOR MACHINE STRUCTURAL USE , MANUFACTURING METHOD FOR SAME, CASE HARDENED STEEL COMPONENT, AND MANUFACTURING METHOD FOR SAME

(51) International classification :C22C 38/00,C21D1/06,C21D8/00
(31) Priority Document No :2009-230910
(32) Priority Date :02/10/2009
(33) Name of priority country :Japan
(86) International Application No :PCT/JP2010/067185
Filing Date :30/09/2010
(87) International Publication No :WO 2011/040587 A1
(61) Patent of Addition to Application Number :NA
Filing Date :NA
(62) Divisional to Application Number:NA
Filing Date :NA

(71)**Name of Applicant :**
1)KABUSHIKI KAISHA KOBE SEIKO SHO (KOBE STEEL, LTD.)
Address of Applicant :10-26, WAKINOHAMA-CHO 2-CHOME, CHUO-KU, KOBE-SHI, HYOGO 651-8585 Japan
(72)**Name of Inventor :**
1)TSUCHIDA, TAKEHIRO
2)MASUDA, TOMOKAZU
3)NAGAHAMA, MUTSUHISA

(57) Abstract :
Disclosed is a steel for machine structural use including 0.05-0.8% of C, 0.03-2% of Si, 0.2-1.8% of.Mn, 0.1-0.5% of Al, 0.0005-0.008% of B, and 0.002-0.015% of N, and including 0.03% of P or less (excluding 0%), 0.03% of S or less (excluding 0%), and 0.002% of O or less (excluding 0%), with the remainder comprising iron and unavoidable impurities. The ratio of BN/A1N precipitated in the steel is 0.020-0.2. Also disclosed is a case hardened steel component in which the ratio of BN/A1N deposited on the carburized or carbonitrided component surface is 0.01 or less and a manufacturing method for same. The steel for machine structural use exhibits excellent machinability in continuous cutting at high speeds using cemented carbide tools, and in interrupted cutting at low speeds using high-speed steel tools, as well as excellent impact performance, even after being subjected to a heat treatment such as quenching and tempering. Furthermore, the case hardened steel component exhibits excellent fatigue resistance, and particularly excellent pitting resistance.

No. of Pages : 46 No. of Claims : 9

(12) PATENT APPLICATION PUBLICATION
(19) INDIA
(22) Date of filing of Application :02/04/2012
(21) Application No.3013/CHENP/2012 A
(43) Publication Date : 05/07/2013

(54) Title of the invention : UV CURABLE INKJET COMPOSITIONS FOR HIGH-DEBSITY PRINT HEADS

(51) International classification :C09D11/10,B41J 2/435
(31) Priority Document No :09172025.0
(32) Priority Date :02/10/2009
(33) Name of priority country :EPO
(86) International Application No :PCT/EP2010/063933
Filing Date :22/09/2010
(87) International Publication No :WO 2011/039081 A1
(61) Patent of Addition to Application Number :NA
Filing Date :NA
(62) Divisional to Application Number :NA
Filing Date :NA

(71)**Name of Applicant :**
1)AGFA GRAPHICS N.V.
Address of Applicant :SEPTESTRAAT 27, B-2640 MORTSEL Belgium
2)AGFA-GEVAERT
(72)**Name of Inventor :**
1)VAN DYCK, GEERT
2)TILEMANS, DAVID

(57) Abstract :
A combination of: a) an inkjet print head having a nozzle density of at least 600 dpi and nozzles with an outer nozzle diameter D smaller than 25 urn; and b) a UV curable inkjet composition containing 0 to 10 wt% of one or more monofunctional monomers and at least A wt% of 2-(2-vinyloxyethoxy)ethyl acrylate, wherein both wt% are based on the total weight of the UV curable inkjet composition; and wherein A is defined by the formula : 100 wt% - D x 3.0 wt%/um <; A ≤ 100 wt% - D x 1.0 wt%/um. An inkjet printer and an inkjet printing method are also disclosed

No. of Pages : 36 No. of Claims : 15

(12) PATENT APPLICATION PUBLICATION
(19) INDIA
(22) Date of filing of Application :10/04/2012
(21) Application No.3218/CHENP/2012 A
(43) Publication Date : 05/07/2013

(54) Title of the invention : METHOD AND APPARATUS FOR DETERMINING RANK OF NODE IN MULTI-HOP WIRELESS NETWORK

(51) International classification	:H04W40/22H04L12/56H04W40/12H04W 40/24
(31) Priority Document No	:12/618,235
(32) Priority Date	:13/11/2009
(33) Name of priority country	:U.S.A.
(86) International Application No	:PCT/JP2010/070259
Filing Date	:09/11/2010
(87) International Publication No	:WO 2011/059079 A1
(61) Patent of Addition to Application Number	:NA
Filing Date	:NA
(62) Divisional to Application Number	:NA
Filing Date	:NA

(71)**Name of Applicant :**
1)MITSUBISHI ELECTRIC CORPORATION
Address of Applicant :7-3, MARUNOUCHI 2-CHOME, CHIYODA-KU, TOKYO 100-8310 Japan
(72)**Name of Inventor :**
1)TAO, ZHIFENG
2)WANG, DI
3)ZHANG, JINYUN

(57) Abstract :
Embodiments of the invention disclose a system and a method for determining a rank of a node in a multi-hop wireless network, wherein the network includes a gateway node, client nodes, and relay nodes, wherein a node p(/) is a default parent of the node / having a rank, and the network uses a directed acyclic graph (DAG) topology. The method comprises steps of transmitting at least one data packet from the node to the default parent node over a wireless link; counting a number of successful transmissions of most recent transmissions of data packets; determining an expected transmission time (ETX) for the wireless link based on the number of successful transmissions in the most recent transmissions; and assigning a rank R(i) to the node based on the rank of the parent node and the ETX.

No. of Pages : 34 No. of Claims : 20

(12) PATENT APPLICATION PUBLICATION
(19) INDIA
(22) Date of filing of Application :28/05/2012
(21) Application No.2125/CHE/2012 A
(43) Publication Date : 05/07/2013

(54) Title of the invention : A POWER UNIT FOR AN ELECTRIC TOOL

(51) International classification :H02J7/00
(31) Priority Document No :2006-253250
(32) Priority Date :19/09/2006
(33) Name of priority country :Japan
(86) International Application No :NA
Filing Date :NA
(87) International Publication No : NA
(61) Patent of Addition to Application Number :NA
Filing Date :NA
(62) Divisional to Application Number :2083/CHE/2007
Filed on :17/09/2007

(71)**Name of Applicant :**
1)HITACHI KOKI CO., LTD
Address of Applicant :15-1, KONAN 2-CHOME, MINATO-KU, TOKYO 108-6020 Japan
(72)**Name of Inventor :**
1)TAKANO, NOBUHIRO
2)KAWANO, YOSHIKAZU
3)FUNABASHI, KAZUHIKO
4)KONUMA, YUUICHI
5)NIYADA, MASATERU
6)YOSHIMIZU, CHIKAI
7)NAKAYAMA, EIJI
8)ISHIMARU, KENRO

(57) Abstract :
When a battery pack having an output voltage of 14.4 V that is connectable to an electric tool in a sliding manner is used as a power supply source for the electric tool that is connectable to a battery pack in an insertion manner and has a rated voltage of 12 V, the electric tool and the battery pack are connected to each other with an adaptor interposed therebetween. The adaptor has an FET that is switched at a predetermined duty of a predetermined frequency. The battery pack and the electric tool are connected or disconnected to or from each other by the switching operation, thereby dropping the output voltage of the battery pack. The voltage from the battery pack is detected. When the detected voltage is out of a predetermined value range, it is judged that the over current or overdischarge has occurred. Then, the FET is turned off to stop the electric tool. Figure 1

No. of Pages : 101 No. of Claims : 12

(12) PATENT APPLICATION PUBLICATION
(19) INDIA
(22) Date of filing of Application :11/04/2012
(21) Application No.3241/CHENP/2012 A
(43) Publication Date : 05/07/2013

(54) Title of the invention : SUBFRAME STAGGERING FOR RELAY COMMUNICATION

(51) International classification :H04B7/26H04W16/26
(31) Priority Document No :61/250,223
(32) Priority Date :09/10/2009
(33) Name of priority country :U.S.A.
(86) International Application No :PCT/US2010/052185
Filing Date :11/10/2010
(87) International Publication No :WO 2011/044558 A1
(61) Patent of Addition to Application Number :NA
Filing Date :NA
(62) Divisional to Application Number :NA
Filing Date :NA

(71)**Name of Applicant :**
1)QUALCOMM INCORPORATED
Address of Applicant :INTERNATIONAL IP ADMINISTRATION, 5775 MOREHOUSE DRIVE, SAN DIEGO, CALIFORNIA 92121-1714 U.S.A.
(72)**Name of Inventor :**
1)AAMOD DINKAR KHANDEKAR
2)TINGFANG JI
3)DEXU LIN
4)WANSHI CHEN

(57) Abstract :
Techniques for supporting relay communication with subframe staggering are described. For subframe staggering, subframes of different relays are staggered from one another, which can increase the number of potential backhaul subframes. In one design, a first relay determines its access subframes and backhaul subframes, which correspond to different non-overlapping subsets of the subframes of the first relay. The first relay communicates with at least one UE during the access subframes and communicates with a base station during the backhaul subframes. The subframes of the first relay are offset from the subframes of a second relay communicating with the base station. In one design, the access subframes of the first relay includes all subframes with either even or odd indices, which can support data transmission with HARQ. In one design, at least one access subframe corresponds to at least one reserved subframe having reduced transmit power from the base station.

No. of Pages : 53 No. of Claims : 53

(12) PATENT APPLICATION PUBLICATION
(19) INDIA
(22) Date of filing of Application :11/04/2012
(21) Application No.3242/CHENP/2012 A
(43) Publication Date : 05/07/2013

(54) Title of the invention : BLIND DECODING OF UPLINK CONTROL CHANNELS

(51) International classification :H04L1/16H04L1/00H04W72/12 H04W 72/14
(31) Priority Document No :12/576,867
(32) Priority Date :09/10/2009
(33) Name of priority country :U.S.A.
(86) International Application No :PCT/US2010/052063
Filing Date :08/10/2010
(87) International Publication No:WO 2011/044509 A2
(61) Patent of Addition to Application Number :NA
Filing Date :NA
(62) Divisional to Application Number :NA
Filing Date :NA

(71)**Name of Applicant :**
1)QUALCOMM INCORPORATED
Address of Applicant :INTERNATIOANL IP ADMINISTRATION, 5775 MOREHOUSE DRIVE, SAN DIEGO, CALIFORNIA 92121-1714 U.S.A.
(72)**Name of Inventor :**
1)DURGA PRASAD MALLADI

(57) Abstract :
In 3GPP LTE, the uplink ACK and CQI bits are jointly coded prior to transmission to maintain a low peak to average ratio (PAR) waveform. Further, when data needs to be transmitted, the uplink control channels are multiplexed with data prior to transmission. However, due to errors on downlink (DL) and uplink (UL) assignments, an evolved Base Node (eNB) receiver needs to employ a set of rules to decode the control channels, to minimize the number of blind decoding hypotheses. This innovation describes the rules employed by a receiver to reduce complexity and computational overhead in part by assuming that the UE is responding to grant on the download while providing for combinations in which one or more types of grants are not received. Energy detection in accordance with metrics and normalizing for differing power controls enables selecting the correct combination for decoding.

No. of Pages : 41 No. of Claims : 42

(12) PATENT APPLICATION PUBLICATION
(19) INDIA
(22) Date of filing of Application :11/04/2012
(21) Application No.3243/CHENP/2012 A
(43) Publication Date : 05/07/2013

(54) Title of the invention : MOBILE COMMUNICATION METHOD, MOBILE STATION, AND RADIO BASE STATION

(51) International classification	:H04W36/04H04W 48/10
(31) Priority Document No	:2009-229942
(32) Priority Date	:01/10/2009
(33) Name of priority country	:Japan
(86) International Application No	:PCT/JP2010/067264
Filing Date	:01/10/2010
(87) International Publication No	:WO 2011/040601 A1
(61) Patent of Addition to Application Number	:NA
Filing Date	:NA
(62) Divisional to Application Number	:NA
Filing Date	:NA

(71)**Name of Applicant :**
1)NTT DOCOMO, INC.
Address of Applicant :11-1, NAGATACHO 2-CHOME, CHIYODA-KU, TOKYO 100-6150 Japan
(72)**Name of Inventor :**
1)HAPSARI, WURI, ANDARMAWANTI
2)UMESH, ANIL
3)TAKAHASHI, HIDEAKI
4)IWAMURA, MIKIO
5)ISHII, MINAMI

(57) Abstract :
A mobile station UE according to the present invention includes a determination unit 13 configured to determine whether the mobile station UE is a registered mobile station in a radio base station HeNB2 based on broadcast information transmitted by the radio base station HeNB2 when the mobile station UE uses a cell subordinate to a radio base station eNB as a serving cell, and a measurement report transmission unit 14 configured to transmit a measurement report including predetermination information indicating the determination result to the radio base station eNB.

No. of Pages : 25 No. of Claims : 5

(12) PATENT APPLICATION PUBLICATION
(19) INDIA
(22) Date of filing of Application :09/04/2012
(21) Application No.3181/CHENP/2012 A
(43) Publication Date : 05/07/2013

(54) Title of the invention : CRUSHER DEVICE

(51) International classification :B02C2/04
(31) Priority Document No :12/576,618
(32) Priority Date :09/10/2009
(33) Name of priority country :U.S.A.
(86) International Application No :PCT/US2010/051746
Filing Date :07/10/2010
(87) International Publication No :WO 2011/044313 A1
(61) Patent of Addition to Application Number :NA
Filing Date :NA
(62) Divisional to Application Number :NA
Filing Date :NA

(71)**Name of Applicant :**
1)FLSMIDTH A/S
Address of Applicant :VIGERSLEV ALLE 77, VALBY, DK-2500 COPENHAGEN Denmark
(72)**Name of Inventor :**
1)MARTINEZ, JOSEPH
2)O'BRYAN, KURT

(57) Abstract :
A gyratory crusher is provided that has a crusher head, an eccentric assembly connected to the crusher head, a bushing positioned between the eccentric assembly and the crusher head, a retaining member, and a plurality of fasteners. The retaining member has an opening and a plurality of holes. The retaining member is positioned adjacent to the eccentric assembly such that a portion of the eccentric assembly is within the opening. Each fastener extends through a respective hole to the crusher head. The retaining member is positioned adjacent to the crusher head and the eccentric assembly such that the retaining member is decoupled from the bushing. The cone crusher is preferably configured to crush rock, stone, ore or minerals. A method of making or retrofitting a crushing device such as, for example, a cone crusher or other gyratory crusher, is also provided.

No. of Pages : 38 No. of Claims : 18

(12) PATENT APPLICATION PUBLICATION
(19) INDIA
(22) Date of filing of Application :09/04/2012
(21) Application No.3182/CHENP/2012 A
(43) Publication Date : 05/07/2013

(54) Title of the invention : POLYOLEFIN-BASED RESIN COMPOSITION AND MOLDED ARTICLE

(51) International classification :C08L23/00,C08L67/00
(31) Priority Document No :2009-210148
(32) Priority Date :11/09/2009
(33) Name of priority country :Japan
(86) International Application No :PCT/JP2010/066002
Filing Date :09/09/2010
(87) International Publication No :WO 2011/030922 A1
(61) Patent of Addition to Application Number :NA
Filing Date :NA
(62) Divisional to Application Number :NA
Filing Date :NA

(71)**Name of Applicant :**
1)SUMITOMO CHEMICAL COMPANY, LIMITED
Address of Applicant :27-1, SHINKAWA 2-CHOME, CHUO-KU, TOKYO 104-8260 Japan
(72)**Name of Inventor :**
1)KAMEO, KOJI
2)SHIMANO, MITSUYOSHI

(57) Abstract :
Provided is a polyolefin-based resin composition comprising from 30 to 90% by mass of a polyolefin resin (A) , from 1 to 50% by mass of an aliphatic polyester-based resin (B) , from 1 to 40% by mass of an ethylene-octene rubber (C) having a melt flow rates being higher than 3 g/10 minutes and not higher than 40 g/10 minutes, and from 0.01 to 20% by mass of an epoxy group-containing ethylene-based polymers (D) ; molded articles obtainable by molding the composition is superior in tensile elongation and impact resistance.

No. of Pages : 26 No. of Claims : 3

(12) PATENT APPLICATION PUBLICATION
(19) INDIA
(22) Date of filing of Application :09/04/2012
(21) Application No.3183/CHENP/2012 A
(43) Publication Date : 05/07/2013

(54) Title of the invention : COMPOSITION FOR ADHESION LAYER USED FOR MULTI-LAYERED SURFACE-TREATMENT STEEL SHEET

(51) International classification :C09D5/00,C09D175/00,C09D7/12
(31) Priority Document No :NA
(32) Priority Date :NA
(33) Name of priority country :NA
(86) International Application No :PCT/JP2009/065902
Filing Date :11/09/2009
(87) International Publication No :WO 2011/030439 A1
(61) Patent of Addition to Application Number :NA
Filing Date :NA
(62) Divisional to Application Number :NA
Filing Date :NA

(71)**Name of Applicant :**
1)NIHON PARKERIZING CO., LTD.
Address of Applicant :15-1, NIHONBASHI 1-CHOME, CHUO-KU, TOKYO 103-0027 Japan
(72)**Name of Inventor :**
1)YAMAGUCHI, HIDEHIRO
2)YAMAMOTO, SHIGEKI
3)IKO, TOMOHIRO
4)LI, WEI

(57) Abstract :
The aim is to provide a composition for forming adhesion layer which has an extremely strong adhesiveness which is influenced by neither the kind of the steel sheet nor the kind of the paint, as well as by neither the variable usage environment nor the variable metal working mode. A composition for adhesion layer that is used for obtaining a multi-layered surface treatment steel sheet in which an adhesion layer is formed onto at least one surface of the steel sheet, and an upper layer and/or an intermediate layer which has a design and which contains a rust preventive pigment and/or a colored pigment is formed onto the adhesion layer, and is characterized in that the composition for adhesion layer includes a canonic urethane resin and a silicon compound represented by the following general formula (I) in an aqueous medium, and the ratio (Tc/Ta) between the temperature (Tc) at which the logarithmic decrement for the mixture of the cationic urethane resin and the silicon compound in the rigid-body pendulum type free damped vibration method shows the maximum value and the temperature (Ta) at which the logarithmic decrement for the cationic urethane resin alone in the rigid-body pendulum type free damped vibration method shows the maximum value is in the range of 1.2 to 3.0.

No. of Pages : 73 No. of Claims : 7

(12) PATENT APPLICATION PUBLICATION
(19) INDIA
(22) Date of filing of Application :12/04/2012
(21) Application No.3298/CHENP/2012 A
(43) Publication Date : 05/07/2013

(54) Title of the invention : WATER PURIFIER

(51) International classification :C02F1/28
(31) Priority Document No :2009-237111
(32) Priority Date :14/10/2009
(33) Name of priority country :Japan
(86) International Application No :PCT/JP2010/065701
Filing Date :13/09/2010
(87) International Publication No :WO 2011/045998 A1
(61) Patent of Addition to Application Number :NA
Filing Date :NA
(62) Divisional to Application Number :NA
Filing Date :NA

(71)**Name of Applicant :**
1)SHARP KABUSHIKI KAISHA
Address of Applicant :22-22, NAGAIKE-CHO, ABENO-KU, OSAKA-SHI, OSAKA 545-8522 Japan
(72)**Name of Inventor :**
1)IKEMIZU, MUGIHEI

(57) Abstract :
Provided is a water purifier capable of preventing water purification performance of a filtering medium from being reduced due to abrupt turbidity of raw water. A turbid matter removal filter (133) is disposed in a water passage (100) and causes raw water to pass therethrough to be purified water. A turbidity sensor (110) detects a turbidity of the raw water circulating through the water passage (100). A first purified water passage induction valve (101) and a drain valve (102) conduct switching between a filtering state where the water circulating through the water passage (100) passes through the turbid matter removal filter (133) and a non-filtering state where the water passing through the water passage (100) does not pass through the turbid matter removal filter (133). The first purified water passage induction valve (101) and the drain valve (102) are configured so as to conduct the switching to the filtering state when the turbidity of the raw water, detected by the turbidity detection part (110), is less than or equal to a predetermined turbidity and so as to conduct the switching to the non-filtering state when the turbidity of the raw water, detected by the turbidity detection part (110), is larger than the predetermined turbidity.

No. of Pages : 40 No. of Claims : 1

(12) PATENT APPLICATION PUBLICATION
(19) INDIA
(22) Date of filing of Application :03/01/2012
(21) Application No.32/CHE/2012 A
(43) Publication Date : 05/07/2013

(54) Title of the invention : PROCESS FOR THE PREPARATION OF INTERMEDIATES OF DPP-IV INHIBITORS

(51) International classification :C07D
(31) Priority Document No :NA
(32) Priority Date :NA
(33) Name of priority country :NA
(86) International Application No :NA
Filing Date :NA
(87) International Publication No : NA
(61) Patent of Addition to Application Number :NA
Filing Date :NA
(62) Divisional to Application Number :NA
Filing Date :NA

(71)**Name of Applicant :**
1)MSN LABORATORIES LIMITED
Address of Applicant :MSN LABORATORIES LIMITED, FACTORY: SY.NO:317 & 323, RUDRARAM(VIL), PATANCHERU(MDL), MEDAK(DIST), ANDHRA PRADESH, INDIA.
(72)**Name of Inventor :**
1)SRINIVASAN THIRUMALAI RAJAN
2)SAJJA ESWARAIAH
3)GHOJALA VENKAT REDDY

(57) Abstract :
The present invention provides a process for the preparation of intermediate compounds used for the preparation of (lS,3S,5S)-2-[(2S)-2-amino-2-(3-hydroxyadamantan-l-yl)acetyl]-2-azabicyclo[3.1.0]hexane-3-carbonitrile and its pharmaceutically acceptable salts thereof, represented by the following structural formula.

No. of Pages : 50 No. of Claims : 10

(12) PATENT APPLICATION PUBLICATION
(21) Application No.3302/CHENP/2012 A
(19) INDIA
(22) Date of filing of Application :12/04/2012
(43) Publication Date : 05/07/2013

(54) Title of the invention : FASTENER FOR STREET IRONWORK, ASSEMBLY, STREET IRONWORK AND CORRESPONDING METHOD

(51) International classification :E02D29/14
(31) Priority Document No :0956358
(32) Priority Date :16/09/2009
(33) Name of priority country :France
(86) International Application No :PCT/FR2010/051834
Filing Date :03/09/2010
(87) International Publication No :WO 2011/033205 A3
(61) Patent of Addition to Application Number :NA
Filing Date :NA
(62) Divisional to Application Number :NA
Filing Date :NA

(71)**Name of Applicant :**
1)SAINT-GOBAIN PAM
Address of Applicant :91, AVENUE DE LA LIBERATION, 54000 NANCY., France
(72)**Name of Inventor :**
1)ROYER, JEAN-CLAUDE
2)ROTHARMEL, VINCENT

(57) Abstract :
A street ironwork, in particular an access cover (10), comprising: - a frame (12) defining an access opening (16); and - an assembly made up of a cover (14) adapted to cover the access opening (16) and extending in a cover plane (T-T), and a fastener (36), the fastener (36) comprising a fastening or locking means (56) and a retaining foot (60) suitable for removably connecting the fastener (36) to the cover (14) via a receiving cavity (40) made in the cover (14) by means of a shape-matching connection, the assembly defining a retaining configuration in which the fastener (36) is engaged in the receiving cavity (40) and retained therein and a release configuration in which the fastener (36) can be removed from the receiving cavity (40), and the retaining foot (60) comprising at least one fastening arm (62), preferably two arms (62), adapted to cooperate by shape-matching connection with the cover (14), the fastening between the fastener (36) and the cover (14) preferably being of the bayonet type, characterized in that the retaining foot can be inserted into the receiving cavity (40) and removed therefrom on the inner side of the cover (14) through a movement along a foot axis (C-C) that is substantially perpendicular to the cover plane (T-T).

No. of Pages : 30 No. of Claims : 18

(12) PATENT APPLICATION PUBLICATION
(19) INDIA
(22) Date of filing of Application :12/04/2012
(21) Application No.3303/CHENP/2012 A
(43) Publication Date : 05/07/2013

(54) Title of the invention : CONTAINER, PARTICULARLY FOR HYDRAULIC VEHICLE BRAKE SYSTEMS

(51) International classification :B60T11/26
(31) Priority Document No :10 2009 029 509.7
(32) Priority Date :16/09/2009
(33) Name of priority country :Germany
(86) International Application No :PCT/EP2010/063517
Filing Date :15/09/2010
(87) International Publication No :WO 2011/032963 A1
(61) Patent of Addition to Application Number :NA
Filing Date :NA
(62) Divisional to Application Number :NA
Filing Date :NA

(71)**Name of Applicant :**
1)CONTINENTAL TEVES AG & CO. OHG
Address of Applicant :GUERICKESTRASSE 7, 60488, FRANKFURT France
(72)**Name of Inventor :**
1)TANDLER, PETER
2)KREBS, WERNER
3)SCHLICHT, STEPHAN
4)NEUMNANN, HANS-JURGEN
5)SCHIEL, CHRISTOPH
6)HIRAGA, YOJI

(57) Abstract :
The invention relates to a reservoir 1, in particular for hydraulic motor vehicle brake systems, having one or more pressure medium chambers 5, 6, a filler neck 4 for filling the reservoir 1 with pressure medium and a pressure medium passage 11, which is connected to the filler neck 4 and has an opening 12 facing the pressure medium chamber 5. In order to provide a reservoir which reliably prevents the pressure medium from leaking when the vehicle is in extreme positions and which, at the same time, can be produced in a simple and inexpensive manner, the proposal according to the invention is that the pressure medium passage 11 be provided as a lateral channel which extends in the longitudinal direction along the reservoir 1, starting from the filler neck 4, and be formed by walls of an upper part 2 and of a lower part 3 of the reservoir 1.

No. of Pages : 13 No. of Claims : 5

(12) PATENT APPLICATION PUBLICATION
(19) INDIA
(22) Date of filing of Application :12/04/2012
(21) Application No.3304/CHENP/2012 A
(43) Publication Date : 05/07/2013

(54) Title of the invention : FREEZE DRYING SYSTEM

(51) International classification :F26B5/06
(31) Priority Document No :61/243,178
(32) Priority Date :17/09/2009
(33) Name of priority country :U.S.A.
(86) International Application No :PCT/US2010/049032
Filing Date :16/09/2010
(87) International Publication No :WO 2011/034980 A1
(61) Patent of Addition to Application Number :NA
Filing Date :NA
(62) Divisional to Application Number :NA
Filing Date :NA

(71)**Name of Applicant :**
1)LINDE AKTIENGESELLSCHAFT
Address of Applicant :KLOSTERHOFSTR. 1, 80331 MUNCHEN Germany
(72)**Name of Inventor :**
1)LEE, RON C
2)CHAKRAVARTY, PRERONA

(57) Abstract :
A method for distributing a cryogenic fluid inside a freeze drying chamber. The cryogenic fluid is fed into the freeze drying chamber through a venturi device. The cryogenic fluid will form an ice fog which will be rapidly and uniformly distributed throughout the freezing chamber and into the vials present in the freezing chamber.

No. of Pages : 15 No. of Claims : 32

(12) PATENT APPLICATION PUBLICATION
(19) INDIA
(22) Date of filing of Application :12/04/2012
(21) Application No.3305/CHENP/2012 A
(43) Publication Date : 05/07/2013

(54) Title of the invention : METHOD FOR PROCESSING WASTE SOLUTION IN PLATE MAKING PROCESS OF PHOTOSENSITIVE PLANOGRAPHIC PRINTING PLATE

(51) International classification	:G03F7/30,G03F 7/32
(31) Priority Document No	:2009-220612
(32) Priority Date	:25/09/2009
(33) Name of priority country	:Japan
(86) International Application No	:PCT/JP2010/060396
Filing Date	:18/06/2010
(87) International Publication No	:WO 2011/036923 A1
(61) Patent of Addition to Application Number	:NA
Filing Date	:NA
(62) Divisional to Application Number	:NA
Filing Date	:NA

(71)**Name of Applicant :**
1)FUJIFILM CORPORATION
Address of Applicant :26-30, NISHIAZABU 2-CHOME, MINATO-KU, TOKYO 106-8620 Japan
(72)**Name of Inventor :**
1)AOSHIMA, NORIO
2)WATANABE, TOSHIHIRO
3)KOBAYASHI, FUMIKAZU

(57) Abstract :
A method for processing waste solution in the plate-making process of a photosensitive planographic printing plate, with which the maintenance performance of the equipment is excellent, is provided. A method for processing waste solution in the plate-making process, in which the waste solution in the plate-making process, which is discharged when the plate-making process of a photosensitive planographic printing plate is carried out using a developer for a photosensitive planographic printing plate, said developer being characterized by containing at least one sugar selected from non-reducing sugars and at least one base without containing a silicate and by having a pH within the range of from 9.0 to 13.5, is evaporated and concentrated by an evaporative concentration apparatus, thereby being separated into water vapor and a dissolved component, wherein, the waste solution in the plate-making process is heated by a heating means in an evaporation container that is provided with base resistance, and the water vapor separated from the waste solution in the plate-making process is taken out from the evaporation container and condensed in a cooling means, thereby being turned into reclaimed water.

No. of Pages : 34 No. of Claims : 6

(12) PATENT APPLICATION PUBLICATION
(19) INDIA
(22) Date of filing of Application :24/05/2012
(21) Application No.2080/CHE/2012 A
(43) Publication Date : 05/07/2013

(54) Title of the invention : SEAT SLIDE LOCKING APPARATUS

(51) International classification :A61G 3/00
(31) Priority Document No :2011-118947
(32) Priority Date :27/05/2011
(33) Name of priority country :Japan
(86) International Application No :NA
Filing Date :NA
(87) International Publication No : NA
(61) Patent of Addition to Application Number :NA
Filing Date :NA
(62) Divisional to Application Number :NA
Filing Date :NA

(71)**Name of Applicant :**
1)DELTA KOGYO CO., LTD.
Address of Applicant :1-14, SHINCHI, FUCHU-CHO, AKI-GUN, HIROSHIMA Japan
(72)**Name of Inventor :**
1)DOMOTO, YASUHITO

(57) Abstract :
A slide locking apparatus has: a first locking piece having a narrow width locking hook section, a third locking piece having a broad width locking hook section and a second locking hook having an intermediate width locking hook section, which are held on an upper aril; and first to third locking piece accommodating holes which have width corresponding to the widths of the respective locking hook sections of the first locking piece to the third locking piece, and which are provided in a lower rail. The first locking piece accommodating hole is disposed on a front most end, the second locking piece accommodating hole is disposed to the rear side of the first locking piece accommodating hole, and the third locking piece accommodating holes are disposed to the rear side of the second locking piece accommodating hole.

No. of Pages : 47 No. of Claims : 8

(12) PATENT APPLICATION PUBLICATION
(21) Application No.2162/CHE/2012 A
(19) INDIA
(22) Date of filing of Application :29/05/2012
(43) Publication Date : 05/07/2013

(54) Title of the invention : KNITTING TOOL MOUNT

(51) International classification	:D04B 27/00
(31) Priority Document No	:11 007 549.6
(32) Priority Date	:16/09/2011
(33) Name of priority country	:Germany
(86) International Application No	:NA
Filing Date	:NA
(87) International Publication No	: NA
(61) Patent of Addition to Application Number	:NA
Filing Date	:NA
(62) Divisional to Application Number	:NA
Filing Date	:NA

(71)**Name of Applicant :**
1)KARL MAYER TEXTILMASCHINENFABRIK GMBH
Address of Applicant :BRUHLSTRASSE 25, 63179 OBERTSHAUSEN Germany
(72)**Name of Inventor :**
1)MISTA, KRESIMIR

(57) Abstract :
A knitting tool mount (1) is specified, having a plurality of knitting tools (2) , each of which has a working region (10) , a fastening region and two narrow sides (4, 5) which are directed in opposite directions, wherein the knitting tools (2) are arranged parallel alongside one another and at a predetermined spacing from one another. It is desired to specify a knitting tool mount which requires a small installation space while having high rigidity and a small mass. To this end, it is provided that the knitting tools (2) are arranged between two cover plates (8, 9), wherein the narrow sides (4, 5) are adhesively bonded to the cover plates (8, 9).

No. of Pages : 18 No. of Claims : 15

(12) PATENT APPLICATION PUBLICATION
(19) INDIA
(22) Date of filing of Application :02/04/2012
(21) Application No.3016/CHENP/2012 A
(43) Publication Date : 05/07/2013

(54) Title of the invention : DRUG DELIVERY DEVICE WITH BIODEGRADABLE PLASTIC COMPONENTS

(51) International classification :A61M5/24
(31) Priority Document No :09172505.1
(32) Priority Date :08/10/2009
(33) Name of priority country :EPO
(86) International Application No :PCT/EP2010/065094
Filing Date :08/10/2010
(87) International Publication No :WO 2011/042537 A1
(61) Patent of Addition to Application Number :NA
Filing Date :NA
(62) Divisional to Application Number :NA
Filing Date :NA

(71)**Name of Applicant :**
1)SANOFI-AVENTIS DEUTSCHLAND GMBH
Address of Applicant :BRUNINGSTRASSE 50, D-65929 FRANKFURT AM MAIN Germany
(72)**Name of Inventor :**
1)BODE, ANDREAS

(57) Abstract :
The present invention relates to drug delivery deive for dispensing of a predefined amount of a medicinal product, comprising: at least one housing component (2), a cartridge holder component (4) to receive a product-containing cartidge (3), the cartridge having a piston slidably arranged therein, a drive mechanism component operably engageable with the piston of the catridge (3) for dispensing of a dose of the medicinal product, wherein at least one of said components (2, 4, 6) at least partially comprises a biodegradable plastic material comprising at least one additive adapted to modify a degradation process of the plastic material.

No. of Pages : 20 No. of Claims : 11

(12) PATENT APPLICATION PUBLICATION
(21) Application No.3347/CHENP/2012 A
(19) INDIA
(22) Date of filing of Application :16/04/2012
(43) Publication Date : 05/07/2013

(54) Title of the invention : MOBILE COMMUNICATION METHOD, MOBILE MANAGEMENT NODE, POSITION DETERMINATION CALCULATION NODE AND MOBILE STATION

(51) International classification :H04W64/00,H04W36/08
(31) Priority Document No :2009-233941
(32) Priority Date :07/10/2009
(33) Name of priority country :Japan
(86) International Application No :PCT/JP2010/067620
Filing Date :07/10/2010
(87) International Publication No :WO 2011/043406 A1
(61) Patent of Addition to Application Number :NA
Filing Date :NA
(62) Divisional to Application Number :NA
Filing Date :NA

(71)**Name of Applicant :**
1)NTT DOCOMO, INC.
Address of Applicant :11-1, NAGATACHO 2-CHOME, CHIYODA-KU, TOKYO 100-6150 Japan
(72)**Name of Inventor :**
1)NISHIDA, KATSUTOSHI
2)MIAO, ZHEN
3)ISHII, MINAMI
4)HAPSARI, WURI, ANDARMAWANTI

(57) Abstract :
To eliminate the problems when a handover by a mobile station UE over a radio base station eNodeB is performed during a positioning process of the mobile station UE. A mobile management node MME according to the present invention is configured to transmit a transfer signal Sl-AP Downlink NAS Transport including an LPP signal received from a positioning calculation node E-SMLC and the identification information of the E-SMLC to a radio base station eNodeB,
and when a transmission failure reason included in a transmission failure notification signal Sl-AP NON DELIVERY INDICATION received from the radio base station eNodeB indicates a positioning failure, the mobile management node MME transmits the transmission failure reason and the LPP signal included in the transmission failure notification signal Sl-AP NON DELIVERY INDICATION to the positioning calculation node E-SMLC identified by the identification information of the E-SMLC included in the transmission failure notification signal.

No. of Pages : 43 No. of Claims : 11

(12) PATENT APPLICATION PUBLICATION
(21) Application No.3220/CHENP/2012 A
(19) INDIA
(22) Date of filing of Application :10/04/2012
(43) Publication Date : 05/07/2013

(54) Title of the invention : STRAPPING MACHINE FOR TYING PACKAGES, IN PARTICULAR METAL STRIPS WOUND INTO COILS

(51) International classification :B65B13/32
(31) Priority Document No :10 2009 048 943.6
(32) Priority Date :10/10/2009
(33) Name of priority country :Germany
(86) International Application No :PCT/EP2010/006145
Filing Date :08/10/2010
(87) International Publication No :WO 2011/042191 A1
(61) Patent of Addition to Application Number :NA
Filing Date :NA
(62) Divisional to Application Number :NA
Filing Date :NA

(71)**Name of Applicant :**
1)SMS LOGISTIKSYSTEME GMBH
Address of Applicant :OBERE INDUSTRIESTRASSE 8, 57250 NETPHEN Germany
(72)**Name of Inventor :**
1)REIMANN, RALF
2)PIEPER, ANDREAS
3)HOFMANN, KARL ROBERT

(57) Abstract :
A strapping machine (1) for securing at least one strap (4; 4a, 4b) around a package (2), in particular a coil of metal strip, comprising a binding head (8, 8a, 8b) engageable against the package, a cincher, and a welder (9a, 9b) for connecting ends (4a, 4b) of the tightened strap (4) and having at least one upper advanceable welding electrode (12) in an electrode housing (10) and a counter electrode temporarily interacting therewith, the welder (9a, 9b) being movable toward the package (2) on a slide plate (14), characterized in that the slide plate (14) also forms the counter electrode and engages underneath the overlapping ends (4a, 4b) of the strapping (4) and directly on the package (2).

No. of Pages : 21 No. of Claims : 10

(12) PATENT APPLICATION PUBLICATION
(19) INDIA
(22) Date of filing of Application :16/04/2012
(21) Application No.3342/CHENP/2012 A
(43) Publication Date : 05/07/2013

(54) Title of the invention : METERED LIQUID DROPLET INHALER

(51) International classification :A61M15/00,A61M11/06
(31) Priority Document No :0950738-5
(32) Priority Date :08/10/2009
(33) Name of priority country :Sweden
(86) International Application No :PCT/SE2010/050972
Filing Date :13/09/2010
(87) International Publication No :WO 2011/043712 A1
(61) Patent of Addition to Application Number :NA
Filing Date :NA
(62) Divisional to Application Number :NA
Filing Date :NA

(71)**Name of Applicant :**
1)SHL GROUP AB
Address of Applicant :IP DEPARTMENT, O.P. BOX 1240, AUGUSTENDALSVAGEN 19, SE-13128 NACKA STRAND Sweden
(72)**Name of Inventor :**
1)BRUNNBERG, LENNART
2)KARLSSON, MARTIN
3)RONQUIST, NILS

(57) Abstract :
The invention relates to a metered liquid droplet inhaling device for delivering medicament, comprising a elongated tubular chassis; a medicament container holder releasably connected to said chassis; a medicament container arranged inside said medicament container holder, and at least one axially movable piston; a dose knob accessible outside the distal end of the chassis for setting a dose to be expelled by- accumulating a rotational force; a power supply mechanism capable of converting the rotational force into an axial force to be applied to the piston and thereby create a pressure inside said medicament container; activation means in mechanical connection to the power supply mechanism; a mouth piece in mechanical connection to the container holder; a droplet generator having a plurality of through passing orifices arranged in the mouth piece, wherein the orifices are in fluid communication with the container and with the mouth piece; wherein the device further comprises a rotation dampening member in mechanical connection to the power supply mechanism for dampening an initial pressure peak inside said medicament container.

No. of Pages : 44 No. of Claims : 17

(12) PATENT APPLICATION PUBLICATION
(21) Application No.3346/CHENP/2012 A
(19) INDIA
(22) Date of filing of Application :16/04/2012
(43) Publication Date : 05/07/2013

(54) Title of the invention : VALVE DEVICE FOR AN AIR SUSPENSION SYSTEM

(51) International classification :B60G17/052,B60G17/015
(31) Priority Document No :10 2009 060 559.2
(32) Priority Date :23/12/2009
(33) Name of priority country :Germany
(86) International Application No :PCT/EP2010/006088
Filing Date :06/10/2010
(87) International Publication No :WO 2011/076304 A1
(61) Patent of Addition to Application Number :NA
Filing Date :NA
(62) Divisional to Application Number :NA
Filing Date :NA

(71)**Name of Applicant :**
1)WABCO GMBH
Address of Applicant :AM LINDENER HAFEN 21, 30453 HANNOVER Germany
(72)**Name of Inventor :**
1)BUCZYLEO, PIOTR
2)HLADIK, MARCIN
3)SCHONEBERG , MARKUS
4)SIEKER, ARMIN
5)STEMDER, AXEL
6)SZYSZKA, KRZYSZTOF
7)TRAMBAUER, ALEXANDER
8)WAKULSKI, PAWEL
9)WEIHE, ULRICH

(57) Abstract :
The invention relates to a valve device for an air suspension system in a vehicle. The valve device has increased operating convenience. For this purpose, there is provision whereby: (a) the valve device (6) has at least one cushion connection (14, 15) connectable to a pneumatic spring cushion (3) of the air suspension system, a reserve connection (18) connectable to a compressed-air reserve, and a venting connection (12) connectable to the atmosphere, (b) the valve device (6) has an electrical actuation arrangement (7, 8, 21, 22) and a manual actuation element (9), (c) the valve device (6) has a pneumatically actuable working valve arrangement (27, 28, 29), as a result of the actuation of which the cushion connection (14, 15) can be selectively connected to the reserve connection (18) or to the venting connection (12) or shut off, (d) the working valve arrangement (27, 28, 29) can be actuated pneumatically both by the electrical actuation arrangement (7, 8, 21, 22) and by a pneumatic valve arrangement (23, 24, 25, 26) actuable via the manual actuation element (9), (e) the manual actuation element (9) can be latched in at least one position via an unlockable latching device (30), (f) the unlockable latching device (30) can be unlocked by the actuation of at least one part of the electrical actuation arrangement (7, 8, 21, 22). The invention relates, moreover, to an electronic control device for control-ling an air suspension system in a vehicle by means of such a valve de-vice.

No. of Pages : 50 No. of Claims : 24

(12) PATENT APPLICATION PUBLICATION
(19) INDIA
(22) Date of filing of Application :09/04/2012
(21) Application No.3164/CHENP/2012 A
(43) Publication Date : 05/07/2013

(54) Title of the invention : MESSAGE SERVER DEVICE AND METHOD FOR CONTROLLING MESSAGE DELEIVERY

(51) International classification :G06F15/16
(31) Priority Document No :12/581,928
(32) Priority Date :20/10/2009
(33) Name of priority country :U.S.A.
(86) International Application No :PCT/US2010/051897
Filing Date :08/10/2010
(87) International Publication No :WO 2011/049757 A1
(61) Patent of Addition to Application Number :NA
Filing Date :NA
(62) Divisional to Application Number :NA
Filing Date :NA

(71)**Name of Applicant :**
1)ALCATEL LUCENT
Address of Applicant :3, AVENUE OCTAVE GREARD, F-75007 PARIS France
(72)**Name of Inventor :**
1)STUART O. GOLDMAN
2)ANIL P MACWAN

(57) Abstract :
An exemplary method of controlling message delivery includes receiving a message from a user at a message server. A determination is made whether the message requires a user-specified delivery criterion to be met prior to delivery of the message. The message is sent to an intended recipient if the message does not require the user-specified delivery criterion. The message is held in a specified delivery buffer if the message does require that the user-specified delivery criterion be met. The message from the specified delivery buffer will be automatically sent on behalf of the user to the intended recipient responsive to the user-specified delivery criterion being met.

No. of Pages : 10 No. of Claims : 10

(12) PATENT APPLICATION PUBLICATION
(19) INDIA
(22) Date of filing of Application :09/04/2012
(21) Application No.3165/CHENP/2012 A
(43) Publication Date : 05/07/2013

(54) Title of the invention : METHODS AND DEVICES FOR ASSESSING INFERTILITY AND/OR EGG QUALITY

(51) International classification :G01N33/48
(31) Priority Document No :61/245,265
(32) Priority Date :23/09/2009
(33) Name of priority country :U.S.A.
(86) International Application No :PCT/US2010/050063
Filing Date :23/09/2010
(87) International Publication No :WO 2011/133175 A1
(61) Patent of Addition to Application Number :NA
Filing Date :NA
(62) Divisional to Application Number :NA
Filing Date :NA

(71)**Name of Applicant :**
1)CELMATIX, INC
Address of Applicant :7 HUBERT STREET, NEW YORK NY 10013 U.S.A.
(72)**Name of Inventor :**
1)YURTTAS, PIRAYE
2)BANDAK, LAURA

(57) Abstract :
The invention generally relates to methods and devices for assessing infertility. In certain embodiments, methods of the invention involve conducting an assay to determine presence or absence of a mutation in a plurality of genes selected from Table 1, and assessing infertility based on results of the assay, wherein presence of a mutation in at least two of the genes from Table 1 is indicative of infertility.

No. of Pages : 47 No. of Claims : 26

(12) PATENT APPLICATION PUBLICATION
(19) INDIA
(22) Date of filing of Application :12/04/2012
(21) Application No.3276/CHENP/2012 A
(43) Publication Date : 05/07/2013

(54) Title of the invention : TWIN TANK WATER TREATMENT SYSTEM AND METHOD

(51) International classification :B01J47/14
(31) Priority Document No :61/246,904
(32) Priority Date :29/09/2009
(33) Name of priority country :U.S.A.
(86) International Application No :PCT/US2010/050765
Filing Date :29/09/2010
(87) International Publication No :WO 2011/041444 A1
(61) Patent of Addition to Application Number :NA
Filing Date :NA
(62) Divisional to Application Number :NA
Filing Date :NA

(71)**Name of Applicant :**
1)PENTAIR RESIDENTIAL FILTRATION, LLC
Address of Applicant :5500 WAYZATA BOULEVARD, SUITE 800, GOLDEN VALLEY, MINNESOTA 55416 U.S.A.
(72)**Name of Inventor :**
1)STEWART, JOHN, A.
2)TISCHENDORF, ANDREW, F.
3)SIETH, KENNETH, J.
4)KAMBLE, RAHUL, SADASHIV

(57) Abstract :
Embodiments of the invention provide a twin tank water treatment system and method. The water treatment system includes first tank with a first set of sensors and a first resin bed, a second tank with a second set of sensors and a second resin bed, and a valve assembly with a flow meter and a controller in communication with the first set of sensors, the second set of sensors, and the flow meter. The method includes determining when the resin beds are exhausted based on input from the flow meter, the sensors, and a water hardness setting.

No. of Pages : 23 No. of Claims : 22

(12) PATENT APPLICATION PUBLICATION
(21) Application No.3279/CHENP/2012 A
(19) INDIA
(22) Date of filing of Application :12/04/2012
(43) Publication Date : 05/07/2013

(54) Title of the invention : ELECTRONIC APPARATUS USING TOUCH PANEL AND SETTING VALUE MODIFICATION METHOD OF SAME

(51) International classification	:G06F3/041G06F 3/048H04M 1/247
(31) Priority Document No	:2009-215633
(32) Priority Date	:17/09/2009
(33) Name of priority country	:Japan
(86) International Application No	:PCT/JP2010/065950
Filing Date	:15/09/2010
(87) International Publication No	:WO 2011/034097 A1
(61) Patent of Addition to Application Number	:NA
Filing Date	:NA
(62) Divisional to Application Number	:NA
Filing Date	:NA

(71)**Name of Applicant :**
1)NEC CORPORATION
Address of Applicant :7-1, SHIBA 5-CHOME, MINATO-KU, TOKYO 108-8001
(72)**Name of Inventor :**
1)FUJIBAYASHI, TOSHIHIKO

(57) Abstract :
An electronic device includes a touch panel, and a controlling unit which detects a user touch operation of drawing a circular trajectory on the touch panel and a size of a circular portion surrounded by the circular trajectory on the touch panel, calculates an aspect ratio of the circular portion with reference to the longitudinal direction and the horizontal direction on the touch panel, inputs the calculated aspect ratio of the circular portion as control information of the electronic device, and changes a setting value of the electronic device according to the input aspect ratio of the circular portion.

No. of Pages : 20 No. of Claims : 14

(12) PATENT APPLICATION PUBLICATION
(21) Application No.34/CHE/2012 A
(19) INDIA
(22) Date of filing of Application :03/01/2012
(43) Publication Date : 05/07/2013

(54) Title of the invention : PROCESS FOR THE PREPARATION OF 5,6,7,7A-TETRAHYDRO-4-H-THIENO[3,2-C]PYRIDINE-2-ONE

(51) International classification :C07D
(31) Priority Document No :NA
(32) Priority Date :NA
(33) Name of priority country :NA
(86) International Application No :NA
Filing Date :NA
(87) International Publication No : NA
(61) Patent of Addition to Application Number :NA
Filing Date :NA
(62) Divisional to Application Number :NA
Filing Date :NA

(71)**Name of Applicant :**
1)HIKAL R&D, A DIVISION OF HIKAL LIMITED
Address of Applicant :32/1, KALENA AGRAHARA BANNERAGHATTA ROAD BANGLORE-560076, KARNATKA, INDIA Karnataka India
(72)**Name of Inventor :**
1)ASHOKE KUMAR GANGOPADHYAY
2)DEEPAK MANIK SHENDAGE
3)SACHIN, VISHNU BHILARE
4)SHARAD ASHOK GALVAE

(57) Abstract :
The present invention provides a process for the preparation of 5,6,7,7a-tetrahydro-4-H-thieno[3,2-c]pyridine-2-one its tautomer and their acid addition salts of general formula 1, a key starting material for synthesis of prasugrel. The process includes a protection of amino functional group of 4,5,6,7-tetrahydrothieno[3,2-c]pyridine or its salt represented by the compound of formula 2 with a suitable amino protecting group to provide the compound of formula 3; converting the compound of formula 3 to the compound of formula 4 by halogenation at 2-position; converting the compound of formula 4, to the compound of formula 5, through a series of in situ steps involving Grignard reaction, followed by a treatment with suitable alkyl boronates to yield the corresponding boronate intermediate, which is subsequently converted to boronic acid compound of formula 5 and finally oxidizing the compound of formula 5 to yield the compound of formula 6, which is de-protected to obtain the compound of formula 1.

No. of Pages : 23 No. of Claims : 22

(12) PATENT APPLICATION PUBLICATION
(19) INDIA
(22) Date of filing of Application :12/04/2012
(21) Application No.3285/CHENP/2012 A
(43) Publication Date : 05/07/2013

(54) Title of the invention : PROTEINS AND METHODS OF MAKING SAME

(51) International classification :C12N9/18C12N1/21C12N 15/75
(31) Priority Document No :NA
(32) Priority Date :NA
(33) Name of priority country :NA
(86) International Application No :PCT/IB2009/054535
Filing Date :15/10/2009
(87) International Publication No :WO 2011/045629 A1
(61) Patent of Addition to Application Number :NA
Filing Date :NA
(62) Divisional to Application Number :NA
Filing Date :NA

(71)**Name of Applicant :**
1)DANISCO A/S
Address of Applicant :LANGEBROGADE 1, P O BOX 17, DK 1001 COPENHAKEN K Denmark
(72)**Name of Inventor :**
1)BRUNSTEDT, JANNE
2)SORENSEN, JENS, FRISBAEK
3)SOE, JORN, BORCH
4)VEDEL, CHARLOTTE, JOHANSEN
5)WITTSCHIEBEN, BIRGITTE, O
6)MIKKELSEN, JORN, DALGAARD
7)POULSEN, CHARLOTTE, HORSMANS
8)JENSEN, LENE, B.
9)MILLER, LONE, B.
10)LARSEN, MORTEN, K.
11)LORENTZEN, RIKKE, H.
12)THOUDAHL, CHARLOTTE, R.
13)CERVIN, MARGUERITE, A.
14)BOTT, RICHARD, R.

(57) Abstract :
In one aspect of the present invention there is provided a method for preparing a variant lipid acyltransferase enzyme comprising expressing in a host organism a nucleotide sequence which has at least 90% identity with a nucleotide sequence encoding a parent lipid acyltransferase and comprises at least one modification (suitably at least two modifications) at a position(s) which corresponds in the encoded amino acid sequence to an amino acid(s) located in a) the canyon region of the enzyme (i.e. preferably amino acid residues 31, 27, 85, 86, 119, and 120); and/or b) insertion site 1 (i.e. amino acid residues 22-36) and/or c) insertion site 2 (i.e. amino acid residues 74-88), wherein the canyon region, insertion site 1 and/or insertion site 2 are defined as that region which when aligned based on primary or tertiary structure corresponds to the canyon region, insertion site 1 or insertion site 2 (or the corresponding amino acid residues taught above) of the enzyme shown herein as SEQ ID No. 16 or 6. Preferable modifications are one or more of the following L31Q, H, N, T, F, Y or C (preferably L31 Q); M27R, G, H, K, Y, D, N, V, C, Q, L, E, S or F (preferably M27V); V85H, R, D or E; I86R,Y, S, V, I, A, T, M, F, C or L (preferably I86S or A); A119T or I; Y120K or E; W122S, L or A (preferably W122L); E201R; Q245S; F235A or V; W232G or S; and/or A236G or E.

No. of Pages : 207 No. of Claims : 35

(12) PATENT APPLICATION PUBLICATION
(21) Application No.3286/CHENP/2012 A
(19) INDIA
(22) Date of filing of Application :12/04/2012
(43) Publication Date : 05/07/2013

(54) Title of the invention : HTTP SERVER SYSTEM BASED ON PACKET PROCESSING AND DATA PROCESSING METHOD THEREOF

(51) International classification :H04L29/06
(31) Priority Document No :200910193804.
(32) Priority Date :10/11/2009
(33) Name of priority country :China
(86) International Application No :PCT/CN2010/077486
Filing Date :29/09/2010
(87) International Publication No :WO 2011/057525 A1
(61) Patent of Addition to Application Number :NA
Filing Date :NA
(62) Divisional to Application Number :NA
Filing Date :NA

(71)**Name of Applicant :**
1)TENCENT TECHNOLOGY (SHENZHEN) COMPANY LIMITED
Address of Applicant :ROOM 403, EAST BLOCK 2, SEG PARK, ZHENXING ROAD, FUTIAN DISTRICT, SHENZHEN CITY 518044, GUANGDONG PROVINCE, PRC China
(72)**Name of Inventor :**
1)ZHANG, FUCHUN

(57) Abstract :
A data processing method for an HTTP server is provided. In this method, the HTTP server processes a data packet on a communication port through a raw socket. An HTTP server system based on packet processing is also provided. The provided method and system can support mass data requests of the client, and have a better processing performance.

No. of Pages : 14 No. of Claims : 9

(12) PATENT APPLICATION PUBLICATION
(19) INDIA
(22) Date of filing of Application :12/04/2012
(21) Application No.3287/CHENP/2012 A
(43) Publication Date : 05/07/2013

(54) Title of the invention : CORRUGATED EDGE NIP

(51) International classification	:B65H23/025B65H20/00B65H27/00B65H35/02
(31) Priority Document No	:61/251,007
(32) Priority Date	:13/10/2009
(33) Name of priority country	:U.S.A.
(86) International Application No	:PCT/US2010/052137
Filing Date	:11/10/2010
(87) International Publication No	:WO 2011/046854 A3
(61) Patent of Addition to Application Number	:NA
Filing Date	:NA
(62) Divisional to Application Number	:NA
Filing Date	:NA

(71)**Name of Applicant :**
1)3M INNOVATIVE PROPERTIES COMPANY
Address of Applicant :3M CENTER, POST OFFICE BOX 33427, SAINT PAUL, MINNESOTA 55133-3427 U.S.A.
(72)**Name of Inventor :**
1)NEWHOUSE, KEVIN, B.
2)TAIT, BRUCE, E.
3)LEE, TERENCE A.

(57) Abstract :
A web tensioner, a web slitter, a method of tensioning a web, and a method of slitting a web are provided. A corrugated edge nip is used in the tensioner, the slitter, and the methods of tensioning and slitting. The corrugated edge nip can provide a crossweb tension to a suspended web or film in a web line. The corrugated edge nip can be used in conjunction with, for example, a rotary shear slitter to improve slit edge quality.

No. of Pages : 25 No. of Claims : 15

(12) PATENT APPLICATION PUBLICATION
(19) INDIA
(22) Date of filing of Application :12/04/2012
(21) Application No.3288/CHENP/2012 A
(43) Publication Date : 05/07/2013

(54) Title of the invention : WIRELESS CONTROL OF POWER NETWORK SWITCHING DEVICES

(51) International classification :H02M7/5387
(31) Priority Document No :NA
(32) Priority Date :NA
(33) Name of priority country :NA
(86) International Application No :PCT/EP2009/063408
Filing Date :14/10/2009
(87) International Publication No :WO 2011/044933 A1
(61) Patent of Addition to Application Number :NA
Filing Date :NA
(62) Divisional to Application Number :NA
Filing Date :NA

(71)**Name of Applicant :**
1)ABB RESEARCH LTD.
Address of Applicant :AFFOLTERNSTRASSE 44, CH-8050 ZURICH Switzerland
(72)**Name of Inventor :**
1)KORN, ARTHUR
2)DZUNG, DACFEY
3)SCHEIBLE, GUNTRAM
4)VEFLING, HARALD
5)VALLESTAD, ANNE

(57) Abstract :
A method for controlling a plurality of power converters connected to a power supply network is described. Each power converter comprises high-power semiconductor devices. Control signals are sent between a controller and a wireless node of one or more of said plurality of power converters using a wireless communication system. The control signals are transmitted to a local wireless node of one or more of a plurality of power converters. The data transmissions include data packets comprising control information such that a clock of the local wireless node can be synchronized using time synchronization information of the wireless communication system. In other aspects of the invention a system employing the method and a computer program for carrying out the method are described.

No. of Pages : 22 No. of Claims : 24

(12) PATENT APPLICATION PUBLICATION
(19) INDIA
(22) Date of filing of Application :27/12/2011
(21) Application No.4600/CHE/2011 A
(43) Publication Date : 05/07/2013

(54) Title of the invention : PROMOTION AND PACKAGE BUILD TOOL FOR CONFIGURABLE NETWORK COMPUTING SYSTEMS

(51) International classification :G06F
(31) Priority Document No :NA
(32) Priority Date :NA
(33) Name of priority country :NA
(86) International Application No :NA
Filing Date :NA
(87) International Publication No : NA
(61) Patent of Addition to Application Number :NA
Filing Date :NA
(62) Divisional to Application Number :NA
Filing Date :NA

(71)**Name of Applicant :**
1)INFOSYS LIMITED
Address of Applicant :IP CELL, PLOT NO.44, ELECTRONIC CITY, HOSUR ROAD, BANGALORE - 560 100 Karnataka India
(72)**Name of Inventor :**
1)NEERAJ KUMAR SHUKLA
2)SHARAD BANSAL

(57) Abstract :
Computer-implemented systems, methods, and computer-readable media for project promotion, package assembly, and build processing in a Configurable Network Computing architecture comprising: receiving a request for a package build from a user; storing, by at least one of the one or more computing devices, the received request for the package build in a dataset; transmitting a request for promotion of the package build in response to storing the received request for the package build; receiving approval of the request for promotion; and initiating a promotion and build process.

No. of Pages : 27 No. of Claims : 20

(12) PATENT APPLICATION PUBLICATION
(21) Application No.3351/CHENP/2012 A
(19) INDIA
(22) Date of filing of Application :16/04/2012
(43) Publication Date : 05/07/2013

(54) Title of the invention : DEVICE FOR BUTT JOINING ELONGATED ELEMENTS

(51) International classification :F16B3/00
(31) Priority Document No :MI2009A001974
(32) Priority Date :11/11/2009
(33) Name of priority country :Italy
(86) International Application No :PCT/IB2010/054288
Filing Date :23/09/2010
(87) International Publication No :WO 2011/058451 A9
(61) Patent of Addition to Application Number :NA
Filing Date :NA
(62) Divisional to Application Number :NA
Filing Date :NA

(71)**Name of Applicant :**
1)SMS INNSE S.P.A.
Address of Applicant :VIA MILANO, 4 I-20097 SAN DONATO MILANESE (MI) Italy
(72)**Name of Inventor :**
1)ROSSI, ANTONINO

(57) Abstract :
The invention relates to a device (100) for connecting two long parts (101) and (102) end- to- end. The device comprises: a body (20) which extends along an axis x; the body is hollow so as to defining axial cavity (30) having a side wall (33), a first end face (31) and a second end face (32); a first enlarged portion (21) situated at a first end of the body; the first enlarged portion defines a first bottom abutment (23) and a first top abutment (25); a second enlarged portion (22) situated at a second end of the body; the second enlarged portion defines a second bottom abutment (24) and a second top abutment (26); at least one piston (40) comprising a front surface (41) and a stem (42). The piston is housed inside the axial cavity so as to define a chamber (50) able to be pressurized; the stem makes contact against one of the end laces of the axial cavity; and means (52) for introducing/removing a pressurized fluid into/from the chamber.

No. of Pages : 33 No. of Claims : 16

(12) PATENT APPLICATION PUBLICATION
(21) Application No.3352/CHENP/2012 A
(19) INDIA
(22) Date of filing of Application :16/04/2012
(43) Publication Date : 05/07/2013

(54) Title of the invention : ADJUSTMENT HEAD FOR A HOISTING DEVICE

(51) International classification :B66F9/065,B66F9/14,B66F9/18
(31) Priority Document No :NA
(32) Priority Date :NA
(33) Name of priority country :NA
(86) International Application No:PCT/IB2009/054664
Filing Date :21/10/2009
(87) International Publication No :WO 2011/048441 A1
(61) Patent of Addition to Application Number :NA
Filing Date :NA
(62) Divisional to Application Number :NA
Filing Date :NA

(71)**Name of Applicant :**
1)HH INTELLITECH APS
Address of Applicant :NYKOEBING LANDEVEJ 21 AARSLEV DE-4200 SLAGELSE Denmark
(72)**Name of Inventor :**
1)BAGGE, NIELS HENRIK

(57) Abstract :
An adjustment head (2) is provided for a hoisting device (1) and intended for releasable connection (7) with the free end (6) of the hoisting device (1), said adjustment head (2) comprising mechanisms (9-13, 15) for three-dimensional adjustment of the adjustment head (2) independently from adjustment means of the hoisting device (1).

No. of Pages : 14 No. of Claims : 13

(12) PATENT APPLICATION PUBLICATION
(19) INDIA
(22) Date of filing of Application :16/04/2012
(21) Application No.3353/CHENP/2012 A
(43) Publication Date : 05/07/2013

(54) Title of the invention : NOX ELIMINATION INJECTOR FIRING CONTROL CIRCUIT

(51) International classification :B01D53/90
(31) Priority Document No :12/631,479
(32) Priority Date :04/12/2009
(33) Name of priority country :U.S.A.
(86) International Application No :PCT/US2010/058668
Filing Date :02/12/2010
(87) International Publication No :WO 2011/068940 A1
(61) Patent of Addition to Application Number :NA
Filing Date :NA
(62) Divisional to Application Number :NA
Filing Date :NA

(71)**Name of Applicant :**
1)TENNECO AUTOMOTIVE OPERATING COMPANY, INC.
Address of Applicant :500 NORTH FIELD DRIVE LAKE FOREST, ILLINOIS 60045 U.S.A.
(72)**Name of Inventor :**
1)THOMAS, STEPHEN
2)REYNOLDS, JAMES
3)KEIDEL, SEAN
4)SHOVELS, MICHAEL

(57) Abstract :
An NOx injection system for treating a vehicle exhaust system comprises an injector for injecting a select material into the vehicle exhaust system and including an electrical coil. An impedance element is connected in series with a flyback diode across the coil. An injector firing control circuit is electrically connected to the injector for driving the coil, the switching circuit operating in an on mode to fire the injector and in an off mode to turn off the injector. The impedance element increases reverse voltage to increase injector turn off response.

No. of Pages : 17 No. of Claims : 23

(12) PATENT APPLICATION PUBLICATION
(19) INDIA
(22) Date of filing of Application :16/04/2012
(21) Application No.3355/CHENP/2012 A
(43) Publication Date : 05/07/2013

(54) Title of the invention : FIRE RETARDANT POLYAMIDE CAST ITEM INCLUDING AN INTUMESCENT COATING

(51) International classification :C08J7/04, C09D5/18
(31) Priority Document No :0957259
(32) Priority Date :16/10/2009
(33) Name of priority country :France
(86) International Application No :PCT/EP2010/065553
Filing Date :15/10/2010
(87) International Publication No :WO 2011/045426 A1
(61) Patent of Addition to Application Number :NA
Filing Date :NA
(62) Divisional to Application Number :NA
Filing Date :NA

(71)**Name of Applicant :**
1)RHODIA OPERATIONS
Address of Applicant :40, RUE DE LA HAIE COQ, F-93306 AUBERVILLIERS France
(72)**Name of Inventor :**
1)GALLOU, HELENE
2)JIMENEZ, MAUDE
3)JAMA, CHARAFEDDINE
4)DUQUESNE, SOPHIE
5)DELOBEL, RENE
6)COUILLENS, XAVIER
7)BOURBIGOT, SERGE

(57) Abstract :
The present invention relates to fire-retardant polyamide cast items including an intumescent coating. Said items, having excellent fire-retardant properties, include at least one fire-retardant system in the polyamide matrix and have an intumescent coating on at least one of the surfaces of said cast items.

No. of Pages : 26 No. of Claims : 12

(12) PATENT APPLICATION PUBLICATION
(21) Application No.4612/CHE/2011 A
(19) INDIA
(22) Date of filing of Application :27/12/2011
(43) Publication Date : 05/07/2013

(54) Title of the invention : PROCESS FOR PRODUCING PURE STRONTIUM RANELATE

(51) International classification :C07D
(31) Priority Document No :NA
(32) Priority Date :NA
(33) Name of priority country :NA
(86) International Application No :NA
Filing Date :NA
(87) International Publication No : NA
(61) Patent of Addition to Application Number :NA
Filing Date :NA
(62) Divisional to Application Number :NA
Filing Date :NA

(71)**Name of Applicant :**
1)SAI ADVANTIUM PHARMA LTD
Address of Applicant :II-FLOOR, LUXOR PARK, ROAD NO-2, BANJARA HILLS, HYDERABAD - 500 033 Andhra Pradesh India
(72)**Name of Inventor :**
1)ACHAMPETA, RATHAN PRASAD
2)KEESARI, SRINIVAS
3)BACHU, UDAY KUMAR

(57) Abstract :
Abstract A highly pure strontium ranelate substantially free of dimer impurity-A (Ethyl 4-cyano-3-(2-ethoxy-2-oxoethyl)-5-((2-ethoxy-2-oxoethyl)(2-((4-(2-ethoxy-2-oxoethyl)-5-(ethoxycarbonyl)-3-isocyanothiophen-2-yl)amino)-2-oxoethyl) amino) thiophene-2-carboxylate) or dimer impurity-B (5-(2-((5-carboxylato-4- (carboxylatomethyl)-3-cyanothiophen-2-yl) (carboxylato methyl) amino) acetamido)-3-(carboxylatomethyl)-4-isocyanothiophene-2-carboxylate) or both in an amount less than about 0.02 area-% as measured by HPLC is formed during the synthesis of strontium ranelate of formulal.

No. of Pages : 22 No. of Claims : 7

(12) PATENT APPLICATION PUBLICATION
(21) Application No.3157/CHENP/2012 A
(19) INDIA
(22) Date of filing of Application :09/04/2012
(43) Publication Date : 05/07/2013

(54) Title of the invention : METHODS AND APPARATUS FOR TRANSPORT BLOCK SIZE DETERMINATION APPLYING AN ADJUSTMENT FACTOR

(51) International classification :H04W72/12,H04L1/00
(31) Priority Document No :61/252,109
(32) Priority Date :15/10/2009
(33) Name of priority country :U.S.A.
(86) International Application No :PCT/US2010/052831
Filing Date :15/10/2010
(87) International Publication No :WO 2011/047253 A1
(61) Patent of Addition to Application Number :NA
Filing Date :NA
(62) Divisional to Application Number :NA
Filing Date :NA

(71)**Name of Applicant :**
1)QUALCOMM INCORPORATED
Address of Applicant :INTERNATIONAL IP ADMINISTRATION, 5775 MOREHOUSE DRIVE, SAN DIEGO, CALIFORNIA 92121-1714 U.S.A.
(72)**Name of Inventor :**
1)WANSHI CHEN
2)JAUN MONTOJO

(57) Abstract :
Methods and apparatus for determining transport block sizes for relaying backhaul subframes from a relay node to a donor base station are described. A transport block size may be adjusted at a relay node by an adjustment factor. The adjustment factor may be based on parameters such as propagation delay between the relay node and donor base station, a multiplexing configuration of control and data information in a relay node subframe, a switching time in a relay node subframe between a downlink and an uplink partition of the subframe, and/or other channel or configuration characteristics.

No. of Pages : 54 No. of Claims : 56

(12) PATENT APPLICATION PUBLICATION
(21) Application No.3158/CHENP/2012 A
(19) INDIA
(22) Date of filing of Application :09/04/2012
(43) Publication Date : 05/07/2013

(54) Title of the invention : IMPROVEMENTS IN OR RELATING TO RADIO NAVIGATION

(51) International classification :G01S5/10
(31) Priority Document No :09275092.6
(32) Priority Date :05/10/2009
(33) Name of priority country :EPO
(86) International Application No :PCT/GB2010/051653
Filing Date :04/10/2010
(87) International Publication No :WO 2011/042725 A2
(61) Patent of Addition to Application Number :NA
Filing Date :NA
(62) Divisional to Application Number :NA
Filing Date :NA

(71)**Name of Applicant :**
1)BAE SYSTEMS PLC
Address of Applicant :6 CARLTON GARDENS, LONDON SW1Y 5AD U.K.
(72)**Name of Inventor :**
1)RAMSEY MICHAEL FARAGHER

(57) Abstract :
Methods and systems for estimating the position of a radio signal receiver (1) are described. The position of a first stationary radio signal transmitter (A) is estimated using a primary set of positioning resources available to the receiver (1). Once the position of the first transmitter has been determined, it is added to a secondary set of positioning resources available to the receiver (1). If the primary set of positioning resources is ineffectual, the secondary set of positioning resources may be used to estimate the position of the receiver (1).

No. of Pages : 46 No. of Claims : 15

(12) PATENT APPLICATION PUBLICATION
(19) INDIA
(22) Date of filing of Application :09/04/2012
(21) Application No.3159/CHENP/2012 A
(43) Publication Date : 05/07/2013

(54) Title of the invention : METHODS AND APPARATUS FOR CONTROLLING CHANNEL UTILIZATION

(51) International classification :H04W72/08
(31) Priority Document No :12/578,726
(32) Priority Date :14/10/2009
(33) Name of priority country :U.S.A.
(86) International Application No :PCT/US2010/052378
Filing Date :21/10/2010
(87) International Publication No :WO 2011/046965 A1
(61) Patent of Addition to Application Number :NA
Filing Date :NA
(62) Divisional to Application Number :NA
Filing Date :NA

(71)**Name of Applicant :**
1)QUALCOMM INCORPORATED
Address of Applicant :INTERNATIONAL IP ADMINISTRATION, 5775 MOREHOUSE DRIVE, SAN DIEGO, CALIFORNIA 92121-1714 U.S.A.
(72)**Name of Inventor :**
1)XINZHOU WU
2)JUNYI LI
3)PRAMOD VISWANATH

(57) Abstract :
Methods and apparatus for determining a portion of a channel, e.g., a peer discovery channel, to use in a communications network, e.g., an ad hoc peer to peer network, are described. In the communication network, the channel includes a recurring set of time/frequency resources. A device monitors the congestion level and decides to use a whole channel or a fraction of a channel (e.g., Vi. lA) as a function of the congestion level. The device may change the fraction of the channel it occupies as the congestion level changes. The device broadcasts control information indicating the fraction of the channel it occupies. The device may be a mobile wireless terminal.

No. of Pages : 56 No. of Claims : 20

(12) PATENT APPLICATION PUBLICATION
(19) INDIA
(22) Date of filing of Application :09/04/2012
(21) Application No.3160/CHENP/2012 A
(43) Publication Date : 05/07/2013

(54) Title of the invention : METHOD FOR ACCESSING SERVICES BY A USER UNIT

(51) International classification :H04N7/167,H04N5/00
(31) Priority Document No :09174224.7
(32) Priority Date :27/10/2009
(33) Name of priority country :EPO
(86) International Application No :PCT/EP2010/066105
Filing Date :26/10/2010
(87) International Publication No :WO 2011/051248 A1
(61) Patent of Addition to Application Number :NA
Filing Date :NA
(62) Divisional to Application Number :NA
Filing Date :NA

(71)**Name of Applicant :**
1)NAGRAVISION S.A.
Address of Applicant :ROUTE DE GENEVE 22-24, CH-1033 CHESEAUX-SUR-LAUSANNE Switzerland
(72)**Name of Inventor :**
1)SEBASTIEN ROBYR
2)GUY MOREILLON

(57) Abstract :
The invention concerns a method for accessing services by a user unit, said services being a subset of all services broadcast by a management center and comprising at least two services, said subset of services defining a package, each service being simultaneously broadcast and containing audio/video data, the data of a service being encrypted by at least one control word, the method comprising the steps of: - determining in a management center, the package a user unit is entitled to access to; - determining in said management center a unique key pertaining to said user unit; - forming a message containing at least one control word for each service of the package for which the users unit is entitled, said control word being secured by the key pertaining to said user unit so that said key must be used to obtain the control word; - transmitting to at least said user unit said message on at least one channel accessible whatever the selected service is.

No. of Pages : 20 No. of Claims : 15

(12) PATENT APPLICATION PUBLICATION
(21) Application No.4627/CHE/2011 A
(19) INDIA
(22) Date of filing of Application :28/12/2011
(43) Publication Date : 05/07/2013

(54) Title of the invention : ULTRASONIC GUIDED WAVE SYSTEM AND METHOD FOR MEASUREMENT OF FLUID PROPERTIES AND FLUID LEVELS

(51) International classification :G01F
(31) Priority Document No :NA
(32) Priority Date :NA
(33) Name of priority country :NA
(86) International Application No :NA
Filing Date :NA
(87) International Publication No : NA
(61) Patent of Addition to Application Number :NA
Filing Date :NA
(62) Divisional to Application Number :NA
Filing Date :NA

(71)**Name of Applicant :**
1)GENERAL ELECTRIC COMPANY
Address of Applicant :1 RIVER ROAD, SCHENECTADY, NEW YORK 12345. U.S.A.
(72)**Name of Inventor :**
1)GORAVAR, SHIVAPPA NINGAPPA
2)KOYITHITTA MEETHAL, MANOJ KUMAR
3)KOMMAREDDY, VAMSHI KRISHNA REDDY
4)PAWAR, RAJESH BHIMRAO

(57) Abstract :
A sensing system employs an ultrasonic waveguide sensor for measurement of fluid density, fluid viscosity, fluid level and an RTD/theromocouple to measure fluid temperature, among other fluid parameters, by the propagation of ultrasonic wave energy along the ultrasonic waveguide sensor located partially in contact with the fluid(s). The ultrasonic waveguide sensor has a polygon shaped cross section having vertices that alternate between joining outward and inward pointing pairs of edges.

No. of Pages : 25 No. of Claims : 15

(12) PATENT APPLICATION PUBLICATION
(19) INDIA
(22) Date of filing of Application :04/04/2012
(21) Application No.3093/CHENP/2012 A
(43) Publication Date : 05/07/2013

(54) Title of the invention : WIRELESS WIDE AREA NETWORK TECHNOLOGY AGGREGATION AND BROADCAST

(51) International classification	:H04W48/10,H04W 88/06,H04W 88/10
(31) Priority Document No	:12/577,541
(32) Priority Date	:12/10/2009
(33) Name of priority country	:U.S.A.
(86) International Application No	:PCT/US2010/052184
Filing Date	:11/10/2010
(87) International Publication No	:WO 2011/049768 A1
(61) Patent of Addition to Application Number	:NA
Filing Date	:NA
(62) Divisional to Application Number	:NA
Filing Date	:NA

(71)**Name of Applicant :**
1)QUALCOMM INCORPORATED
Address of Applicant :INTERNATIONAL IP ADMINISTRATION, 5775 MOREHOUSE DRIVE, SAN DIEGO, CALIFORNIA 92121-1714 U.S.A.
(72)**Name of Inventor :**
1)DILIP KRISHNASWAMY
2)ROBERT S. DALEY
3)SAMIR SALIB SOLIMAN
4)SOUMYA DAS

(57) Abstract :
A method, an apparatus, and a computer program product are provided for wireless communication in which wireless signal information is received through at least one wireless wide-area-network technology. In addition, data related to the wireless signal information is aggregated. Furthermore, the data is provided to a wireless node through a wireless wide-area-network technology different from the at least one wireless wide-area-network technology.

No. of Pages : 44 No. of Claims : 92

(12) PATENT APPLICATION PUBLICATION
(19) INDIA
(22) Date of filing of Application :04/04/2012
(21) Application No.3094/CHENP/2012 A
(43) Publication Date : 05/07/2013

(54) Title of the invention : CONNECTIVITY DEPENDED GEOMETRY OPTIMIZATION FOR REAL-TIME RENDERING

(51) International classification	:G06T15/40,G06T17/10,G06T19/00
(31) Priority Document No	:PA 2009 70141
(32) Priority Date	:02/10/2009
(33) Name of priority country	:Denmark
(86) International Application No	:PCT/EP2010/063296
Filing Date	:10/09/2010
(87) International Publication No	:WO 2011/039041 A23
(61) Patent of Addition to Application Number	:NA
Filing Date	:NA
(62) Divisional to Application Number	:NA
Filing Date	:NA

(71)**Name of Applicant :**
1)LEGO A/S
Address of Applicant :DK-7190 BILLUND Denmark
(72)**Name of Inventor :**
1)JESPER MARTIN ERSTVANG
2)TUE JAKOBSEN
3)JAKOB SPROGOE JAKOBSEN

(57) Abstract :
Disclosed is a computer-implemented method for visualising/rendering a computer model, the computer model comprising a plurality of components wherein the method comprises: storing a plurality of parts of at least one of the plurality of components, each part including geometry information for visualising/rendering the part, storing information indicative of the position and orientation of a plurality of components in a coordinate system, determining a spatial relationship between individual components, detennining for the at least one component a number of stored parts to use for visualising/rendering the component, based on the determined spatial relationship between the individual components. By using the spatial relationship between the components to determine the number of parts to use for visualising/rendering a component, knowledge about the geometry of individual components and the connections of the components with other components can be used to find hidden parts that can be removed.

No. of Pages : 70 No. of Claims : 19

(12) PATENT APPLICATION PUBLICATION
(21) Application No.4606/CHE/2011 A
(19) INDIA
(22) Date of filing of Application :27/12/2011
(43) Publication Date : 05/07/2013

(54) Title of the invention : METHODS FOR DISCOVERING AND ANALYZING NETWORK TOPOLOGIES AND DEVICES THEREOF

(51) International classification :G06F
(31) Priority Document No :NA
(32) Priority Date :NA
(33) Name of priority country :NA
(86) International Application No :NA
Filing Date :NA
(87) International Publication No : NA
(61) Patent of Addition to Application Number :NA
Filing Date :NA
(62) Divisional to Application Number :NA
Filing Date :NA

(71)**Name of Applicant :**
1)INFOSYS LIMITED
Address of Applicant :IP CELL, PLOT NO.44, ELECTRONICS CITY, HOSUR ROAD, BANGALORE - 560 100 Karnataka India
(72)**Name of Inventor :**
1)KISHORE VARMA INDUKURI
2)SHAHANAZ SYED
3)RADHA KRISHNA PISIPATI

(57) Abstract :
A method, non-transitory computer readable medium, and apparatus for discovering and analyzing a network topology includes obtaining information regarding a network including a relationship of a plurality of nodes of the network. At least one value for each of a plurality of centrality parameters is determined for each of the plurality of nodes. At least one topology score for each of the plurality of nodes is generated based on one or more of the centrality parameter values. One or more relatively significant nodes are identified based on one or more of the topology scores and output.

No. of Pages : 34 No. of Claims : 21

(12) PATENT APPLICATION PUBLICATION
(21) Application No.4607/CHE/2011 A
(19) INDIA
(22) Date of filing of Application :27/12/2011
(43) Publication Date : 05/07/2013

(54) Title of the invention : METHOD AND APPARATUS FOR REGISTERING A COMPUTING DEVICE WITH A SERVICE PROVIDER

(51) International classification :H04W,H04L
(31) Priority Document No :NA
(32) Priority Date :NA
(33) Name of priority country :NA
(86) International Application No :NA
Filing Date :NA
(87) International Publication No : NA
(61) Patent of Addition to Application Number :NA
Filing Date :NA
(62) Divisional to Application Number :NA
Filing Date :NA

(71)**Name of Applicant :**
1)INFOSYS LIMITED
Address of Applicant :IP CELL, PLOT NO.44, ELECTRONICS CITY, HOSUR ROAD, BANGALORE - 560 100 Karnataka India
(72)**Name of Inventor :**
1)ANOOP NARAYANAN

(57) Abstract :
A method and apparatus for providing authentication of a computing device with a communications service. A subscriber identity module image is transmitted to the device and stored in a general memory of the device and soft SIM data. A secure module on the device permits access to the soft SIM data. The Soft SIM data is registered with the service provider in association with a unique identification of the device. The soft SIM data has a one to one relationship with the device. A device can have many instances of soft SIM data.

No. of Pages : 18 No. of Claims : 24

(12) PATENT APPLICATION PUBLICATION
(21) Application No.4608/CHE/2011 A
(19) INDIA
(22) Date of filing of Application :27/12/2011
(43) Publication Date : 05/07/2013

(54) Title of the invention : FINANCIAL TRANSFERS FROM MOBILE DEVICES

(51) International classification :G06Q
(31) Priority Document No :NA
(32) Priority Date :NA
(33) Name of priority country :NA
(86) International Application No :NA
Filing Date :NA
(87) International Publication No : NA
(61) Patent of Addition to Application Number :NA
Filing Date :NA
(62) Divisional to Application Number :NA
Filing Date :NA

(71)**Name of Applicant :**
1)INFOSYS LIMITED
Address of Applicant :IP CELL, PLOT NO.44, ELECTRONICS CITY, HOSUR ROAD, BANGALORE - 560 100 Karnataka India
(72)**Name of Inventor :**
1)ANOOP NARAYANAN

(57) Abstract :
Computer-implemented systems, methods, and computer-readable media for financial transfers from a mobile device, comprising: receiving a mobile device identifier, a unique user identifier, a merchant identifier, and an amount from a mobile device; determining whether the transaction is authorized based on the mobile device identifier and the unique user identifier; transmitting an authorization failure message to at least one of the mobile device and a merchant device associated with the merchant identifier if it is determined that the transaction is not authorized; and transmitting to a payment gateway an account identifier associated with the unique user identifier and mobile device identifier, the merchant identifier, and the amount if it is determined that the transaction is authorized.

No. of Pages : 30 No. of Claims : 19

(12) PATENT APPLICATION PUBLICATION
(19) INDIA
(22) Date of filing of Application :12/04/2012
(21) Application No.3299/CHENP/2012 A
(43) Publication Date : 05/07/2013

(54) Title of the invention : SPILL CONTAINING REFRIGERATOR SHELF ASSEMBLY

(51) International classification :F25D25/02
(31) Priority Document No :12/562,920
(32) Priority Date :18/09/2009
(33) Name of priority country :U.S.A.
(86) International Application No :PCT/US2010/048711
Filing Date :14/09/2010
(87) International Publication No :WO 2011/034835 A2
(61) Patent of Addition to Application Number :NA
Filing Date :NA
(62) Divisional to Application Number :NA
Filing Date :NA

(71)**Name of Applicant :**
1)SSW HOLDING COMPANY, INC
Address of Applicant :3501 SOUTH TULSA, FORT SMITH, AR 72903 U.S.A.
(72)**Name of Inventor :**
1)DRIVER, JOHN, PATRICK
2)MCMILLIN, MATTHEW
3)NALL, BRADLEY, M

(57) Abstract :
The specification discloses a method for containing spills on shelving and the like, and the resulting support members made in accordance with the method, by providing the generally flat top surface of a support with a hydrophobic surface which is arranged in a spill containment pattern and which is generally in the plane of the top surface of the support. The majority of the top surface of the support consists of one or more spill containment areas which are of a non-hydrophobic nature and which are bounded by the hydrophobic surfaces, such that spills on the shelving collect in the non-hydrophobic spill containment area or areas and are prevented from spreading by the hydrophobic surfaces.

No. of Pages : 79 No. of Claims : 32

(12) PATENT APPLICATION PUBLICATION
(19) INDIA
(22) Date of filing of Application :27/12/2011
(21) Application No.4595/CHE/2011 A
(43) Publication Date : 05/07/2013

(54) Title of the invention : STOVE-MOULD ASSEMBLY

(51) International classification :F24C
(31) Priority Document No :NA
(32) Priority Date :NA
(33) Name of priority country :NA
(86) International Application No :NA
Filing Date :NA
(87) International Publication No : NA
(61) Patent of Addition to Application Number :NA
Filing Date :NA
(62) Divisional to Application Number :NA
Filing Date :NA

(71)**Name of Applicant :**
1)INDIAN INSTITUTE OF SCIENCE
Address of Applicant :INDIAN INSTITUTE OF SCIENCE, BANGALORE 560 012 Karnataka India
(72)**Name of Inventor :**
1)SHRIDHAR SADASHIV LOKRAS
2)PRAMOD RATNAKAR KHADILKAR
3)HANUMASAGAR ISHWARAPPA SOMASHEKAR
4)BYRASANDRA VENKATARAMANAPPA VENKATARAMA REDDY
5)MONTO MANI

(57) Abstract :
The present invention provides a portable multi-core stove mold assembly for rapid construction of a high-efficiency cooking stove with a bottom core having outer and inner vertical retaining walls that are positioned to provide a bed on a plane longitudinal to long axis of the bottom core, a middle core defined by a plurality of interconnected vertical retaining walls, mounted on the bottom core, and a top core defined by a plurality of interconnected vertical retaining walls, mounted on the middle core. The present invention also provides a method for the construction of a multi-core cooking stove, using the stove-mould assembly of the present invention.

No. of Pages : 20 No. of Claims : 10

(12) PATENT APPLICATION PUBLICATION
(21) Application No.4596/CHE/2011 A
(19) INDIA
(22) Date of filing of Application :27/12/2011
(43) Publication Date : 05/07/2013

(54) Title of the invention : SYSTEMS AND METHODS FOR DEMARCATING INFORMATION RELATED TO ONE OR MORE BLOCKS IN AN APPLICATION

(51) International classification :G06F
(31) Priority Document No :NA
(32) Priority Date :NA
(33) Name of priority country :NA
(86) International Application No :NA
Filing Date :NA
(87) International Publication No : NA
(61) Patent of Addition to Application Number :NA
Filing Date :NA
(62) Divisional to Application Number :NA
Filing Date :NA

(71)**Name of Applicant :**
1)INFOSYS LIMITED
Address of Applicant :PLOT NO. 44, ELECTRONIC CITY, HOSUR ROAD, BANGALORE - 560 100 Karnataka India
(72)**Name of Inventor :**
1)MURALI KRISHNA EMANI
2)SUDEEP MALLICK
3)BALKRISHNA PRASAD

(57) Abstract :
The invention relates to a system and method for demarcating information related to one or more blocks in an application source code. This invention provides a means to annotate block information in the source code. It parses the application source code to generate an abstract syntax tree and instruments the source code to capture information related to the one or more blocks generated at the time of dynamic analysis of the application. The information related to the one or more blocks are stored in Hash Map and based on this information the abstract syntax tree is modified to add the information related to the one or more blocks and inserting this information in the application source code.

No. of Pages : 24 No. of Claims : 25

(12) PATENT APPLICATION PUBLICATION
(21) Application No.4597/CHE/2011 A
(19) INDIA
(22) Date of filing of Application :27/12/2011
(43) Publication Date : 05/07/2013

(54) Title of the invention : SYSTEM AND METHOD FOR MONITORING AND ANALYSING SOCIAL NETWORK DATABASES

(51) International classification :G06Q
(31) Priority Document No :NA
(32) Priority Date :NA
(33) Name of priority country :NA
(86) International Application No :NA
Filing Date :NA
(87) International Publication No : NA
(61) Patent of Addition to Application Number :NA
Filing Date :NA
(62) Divisional to Application Number :NA
Filing Date :NA

(71)**Name of Applicant :**
1)INFOSYS LIMITED
Address of Applicant :IP CELL, PLOT NO.44, ELECTRONIC CITY, HOSUR ROAD, BANGALORE - 560 100 Karnataka India
(72)**Name of Inventor :**
1)JAI GANESH
2)GOPAKUMAR MADHURAGIL GOPALAKRISHNAN
3)AJAY KOLHATKAR
4)SHAURABH BHARTI
5)SHRIRANG PRAKASH SAHASRABUDHE
6)NISHTHA SRIVASTAVA
7)VIJAYA BHASKAR PEDDINTI
8)TARUN PRAKASH SHARMA
9)MUKUND RAJ

(57) Abstract :
A system and method for monitoring and analyzing social network databases to determine actual key influencers is disclosed. Inputs are received from the user, which includes search keyword(s), time, date, language, area and country. Content corresponding to the user inputs is fetched from the social network databases. The fetched content is analyzed to identify a list of probable key influencers. Among the probable key influencers, actual key influencers are determined based on parameters associated with the probable key influencer. Reports may be generated based on the actual key influencers and the content they posted on the social network.

No. of Pages : 33 No. of Claims : 41

(12) PATENT APPLICATION PUBLICATION
(19) INDIA
(22) Date of filing of Application :27/12/2011
(21) Application No.4598/CHE/2011 A
(43) Publication Date : 05/07/2013

(54) Title of the invention : ACTIVITY POINTS BASED EFFORT ESTIMATION FOR PACKAGE IMPLEMENTATION

(51) International classification :G06Q
(31) Priority Document No :NA
(32) Priority Date :NA
(33) Name of priority country :NA
(86) International Application No :NA
Filing Date :NA
(87) International Publication No : NA
(61) Patent of Addition to Application Number :NA
Filing Date :NA
(62) Divisional to Application Number :NA
Filing Date :NA

(71)**Name of Applicant :**
1)INFOSYS LIMITED
Address of Applicant :IP CELL, PLOT NO.44, ELECTRONIC CITY, HOSUR ROAD, BANGALORE - 560 100 Karnataka India
(72)**Name of Inventor :**
1)ABHISHEK GOYAL
2)NIKHIL KUMAR
3)VINAY KUMAR JAIN
4)ABHISHEK SABHARWAL

(57) Abstract :
Techniques and solutions are provided for determining overall effort for a package implementation program. Determining overall effort can comprise determining a program parameter complexity value for each of a plurality of program parameters, determining activities for program phases and program work streams, calculating an activity point value for each determined activity, and calculating overall effort for the package implementation program. The activity point values can be calculated using, at least in part, the program parameter complexity values. Calculating the overall effort can use, at least in part, the activity point values and a predetermined productivity metric that is specific to a type of the package implementation program.

No. of Pages : 41 No. of Claims : 20

(12) PATENT APPLICATION PUBLICATION
(19) INDIA
(22) Date of filing of Application :12/04/2012
(21) Application No.3309/CHENP/2012 A
(43) Publication Date : 05/07/2013

(54) Title of the invention : THERMOELECTRIC ENERGY STORAGE SYSTEM HAVING AN INTERNAL HEAT EXCHANGER AND METHOD FOR STORING THERMOELECTRIC ENERGY

(51) International classification :F01K3/12,F01K11/04,F01K 3/00,F24H 7/02
(31) Priority Document No :09172831.1
(32) Priority Date :13/10/2009
(33) Name of priority country :EUROPEAN UNION
(86) International Application No :PCT/EP2010/065217
Filing Date :11/10/2010
(87) International Publication No :WO 2011/045282 A3
(61) Patent of Addition to Application Number :NA
Filing Date :NA
(62) Divisional to Application Number :NA
Filing Date :NA

(71)**Name of Applicant :**
1)ABB RESEARCH LTD
Address of Applicant :AFFOLTERNSTRASSE 44, CH-8050 ZURICH Switzerland
(72)**Name of Inventor :**
1)MERCANGOEZ, MEHMET
2)HEMRLE, JAROSLAV
3)KAUFMANN, LILIAN

(57) Abstract :
A thermoelectric energy storage system (TEES) and method for converting electrical energy into thermal energy to be stored and converted back to electrical energy with an improved round-trip efficiency are disclosed. The TEES comprises a working fluid circuit for circulating a working fluid through a first heat exchanger (18) and a second heat exchanger (20), a thermal storage medium circuit for circulating a thermal storage medium, the thermal storage medium circuit having at least one hot storage tank (24) coupled to a cold storage tank (22) via the first heat exchanger (18). The arrangement maximises the work performed by the cycle during charging and discharging for a given maximum pressure and maximum temperature of the working fluid. Advantageously, this maximises the round-trip efficiency of the system.

No. of Pages : 21 No. of Claims : 10

(12) PATENT APPLICATION PUBLICATION
(19) INDIA
(22) Date of filing of Application :12/04/2012
(21) Application No.3310/CHENP/2012 A
(43) Publication Date : 05/07/2013

(54) Title of the invention : PROCESS FOR THE PREPARATION OF A POWDER COMPRISING ONE OR MORE COMPLEXING AGENT SALTS

(51) International classification :B01J2/04,C07C227/42,C11D11/00,C11D3/33
(31) Priority Document No :09172810.5
(32) Priority Date :12/10/2009
(33) Name of priority country :EPO
(86) International Application No :PCT/EP2010/065184
Filing Date :11/10/2010
(87) International Publication No :WO 2011/045266 A1
(61) Patent of Addition to Application Number :NA
Filing Date :NA
(62) Divisional to Application Number :NA
Filing Date :NA

(71)**Name of Applicant :**
1)BASF SE
Address of Applicant :67056, LUDWIGSHAFEN Germany
(72)**Name of Inventor :**
1)MRZUENA, FRANK
2)MENGE, ULLRICH
3)SCHONHERR, MICHAEL
4)HEIDENFELDER, THOMAS

(57) Abstract :
A process is proposed for the preparation of a powder comprising one or more complexing agent salts of the general formula starting from an aqueous solution comprising the one or more complexing agent salts in a concentration of from 10 to 80% by weight, based on the total weight of the aqueous solution, - in a spray-drying process, comprising an atomization step and a drying step, wherein the atomization step is carried out with the addition of crystalline fine dust of the same complexing agent salt(s) as are present in the aqueous solution, or one or more complexing agent salts different therefrom, with an upper limit for the average particle diameter of the crystalline fine dust which is lower by at least a factor of 2 than the lower limit of the average particle diameter of the powder obtained after the process, in a fraction of from 0.1 to 20% by weight, based on the weight of the powder obtained after the process.

No. of Pages : 20 No. of Claims : 14

(12) PATENT APPLICATION PUBLICATION
(21) Application No.37/CHE/2012 A
(19) INDIA
(22) Date of filing of Application :03/01/2012
(43) Publication Date : 05/07/2013

(54) Title of the invention : SMS COMPUTER INTEGRATION FRAMEWORK (SMSCIF)

(51) International classification :G06F
(31) Priority Document No :NA
(32) Priority Date :NA
(33) Name of priority country :NA
(86) International Application No :NA
Filing Date :NA
(87) International Publication No : NA
(61) Patent of Addition to Application Number :NA
Filing Date :NA
(62) Divisional to Application Number :NA
Filing Date :NA

(71)**Name of Applicant :**
1)MAQBOOL BASHA COMMU SYED
Address of Applicant :FLAT #201, LANTANA BLOCK, BHANU TOWNSHIP, OLD HAFEEZPET RD, MIYAPUR, HYDERABAD - 500 049 (AP) INDIA Andhra Pradesh India
(72)**Name of Inventor :**
1)MAQBOOL BASHA COMMU SYED

(57) Abstract :
Our invention, SMS Computer Integration framework (SMSCIF) actually interfaces the mobile phones with the computer and Internet via SMS and SMS commands (NO Internet access on mobile, No Software on mobile is needed), as if the mobile phone is a virtual keyboard for the computer and Internet. Analogous to, a web browser accessing infonnation via Internet from a host of servers, mobile phones process/access information via SMS from servers and Internet and especially the information that the user is enabled to upload, manage and share with others, real-time, customizable, interactive and in very easy way even a lay man without much knowledge of technology can operate. Our framework provides the users such a facility to access information on Internet, process information on computers including triggering some action by the computers/processors, upload their own content, tests and take them as per their customization or share it with friends and design and upload SMSsite or personal SMS blog in a very easy way and have users/friends browse it via SMS.

No. of Pages : 23 No. of Claims : 23

(12) PATENT APPLICATION PUBLICATION
(21) Application No.5/CHE/2012 A
(19) INDIA
(22) Date of filing of Application :02/01/2012
(43) Publication Date : 05/07/2013

(54) Title of the invention : PROCESS FOR THE PREPARATION OF OLMESARTAN MEDOXOMIL

(51) International classification :C07D
(31) Priority Document No :NA
(32) Priority Date :NA
(33) Name of priority country :NA
(86) International Application No :NA
Filing Date :NA
(87) International Publication No : NA
(61) Patent of Addition to Application Number :NA
Filing Date :NA
(62) Divisional to Application Number :NA
Filing Date :NA

(71)**Name of Applicant :**
1)SMILAX LABORATORIES LIMITED
Address of Applicant :PLOT NO. 12/A, PHASE-III, I.D.A., JEEDIMETLA, HYDERABAD - 500 055 Andhra Pradesh India
(72)**Name of Inventor :**
1)MR. NARSIMHA MURTHY HARIKEERTHI
2)MR. SUDHAKAR BABU KARRA
3)MR. MURALI MOHAN RAO YISKALA
4)DR. MALLELA SAMBHU PRASAD SARMA

(57) Abstract :
The present invention relates to an improved process for the manufacture of Olmesartan and its pharmaceutically acceptable salts and esters thereof, as active ingredients of a medicament for the treatment of hypertension and related diseases and conditions. Olmesartan medoxomil, is chemically described as Olmesartan medoxomil, 4-(l-hydroxy-1-methylethyl)-2-propyl-1 -[[2'-(1 H-tetrazol-5-yl) [1, 1 '-biphenyl]-4yl] methyl]-1 H-imidazole-5-carboxyiic acid has the formula as given below: It is widely used for the treatment of hypertension and related diseases and conditions due to its ability to inhibit the angiotensin-converting enzyme. As an angiotensin II receptor antagonist, olmesartan medoxomil avoids the side-effects of calcium antagonists, shows high stability and obvious curative effects.

No. of Pages : 25 No. of Claims : 8

(12) PATENT APPLICATION PUBLICATION
(19) INDIA
(22) Date of filing of Application :12/04/2012
(21) Application No.3290/CHENP/2012 A
(43) Publication Date : 05/07/2013

(54) Title of the invention : METHODS OF CHARACTERIZING SMALL NUCLEIC ACID MOLECULES

(51) International classification :C12Q1/68C12P19/34
(31) Priority Document No :12/575,703
(32) Priority Date :08/10/2009
(33) Name of priority country :U.S.A.
(86) International Application No :PCT/US2010/043866
Filing Date :30/07/2010
(87) International Publication No :WO 2011/043857 A1
(61) Patent of Addition to Application Number :NA
Filing Date :NA
(62) Divisional to Application Number :NA
Filing Date :NA

(71)**Name of Applicant :**
1)OPGEN, INC
Address of Applicant :708, QUINCE ORCHARD ROAD, SUITE 160, GAITHERSBURG, MD 20878 U.S.A.
(72)**Name of Inventor :**
1)LENNOX, RONALD, W
2)DYKES, COLIN, W

(57) Abstract :
The invention generally relates to methods of characterizing small nucleic acid molecules, such as plasmids or nucleic acid molecules obtained from a virus. In certain embodiments, the invention provides a method of characterizing a small circular nucleic acid molecule, the method including performing rolling circle amplification on a small circular nucleic acid molecule, thereby producing a concatamer, and generating an optical map of the concatamer, thereby characterizing the small circular nucleic acid molecule.

No. of Pages : 12 No. of Claims : 22

(12) PATENT APPLICATION PUBLICATION
(21) Application No.3291/CHENP/2012 A
(19) INDIA
(22) Date of filing of Application :12/04/2012
(43) Publication Date : 05/07/2013

(54) Title of the invention : POLYPROPYLENE RESIN EXPANDED PARTICLES AND POLYPROPYLENE RESIN IN-MOLD MOLDED BODY

(51) International classification :C08J9/18C08F210/06C08F4/6592
(31) Priority Document No :2009-232700
(32) Priority Date :06/10/2009
(33) Name of priority country :Japan
(86) International Application No :PCT/JP2010/005824
Filing Date :28/09/2010
(87) International Publication No :WO 2011/043032 A1
(61) Patent of Addition to Application Number :NA
Filing Date :NA
(62) Divisional to Application Number :NA
Filing Date :NA

(71)**Name of Applicant :**
1)KANEKA CORPORATION
Address of Applicant :2-4, NAKANOSHIMA 3-CHOME, KITA-KU OSAKA-SHI, OSAKA 5308288 Japan
(72)**Name of Inventor :**
1)KENICHI SENDA

(57) Abstract :
Polypropylene resin expanded particles include: a polypropylene resin as a base material resin having at least two melting peaks on a DSC curve obtained by measurements of melting points using a DSC, the at least two melting peaks including (i) a lowest-temperature melting peak of 100 °C or more but 130 °C or less and (ii) a highest-temperature melting peak of 140 °C or more but 160 °C or less, so that the expanded particles: can produce an in-mold foaming molded product at a very low mold heating steam pressure; exhibit low distortion, low shrinkage, and a wide range of heating condition for molding, even if the mold heating steam pressure is increased; indicate a satisfactory moldability when the expanded particles are molded by using a mold having a complicated shape or a large mold; and maintain its properties such as compressive strength, without being impaired largely, when the expanded particles prepare the in-mold foaming molded product.

No. of Pages : 81 No. of Claims : 8

(12) PATENT APPLICATION PUBLICATION
(21) Application No.3294/CHENP/2012 A
(19) INDIA
(22) Date of filing of Application :12/04/2012
(43) Publication Date : 05/07/2013

(54) Title of the invention : TARGETED EQUIPMENT MONITORING SYSTEM AND METHOD FOR OPTIMIZING EQUIPMENT RELIABILITY

(51) International classification	:G06F19/00G06F 11/30G06Q 50/00	(71)**Name of Applicant :** **1)PATRICK D. ABBOTT** Address of Applicant :529, MOURNING DOVE CIRCLE, LAKE MARY, FLORIDA 32746 U.S.A.
(31) Priority Document No	:61/250,704	
(32) Priority Date	:12/10/2009	
(33) Name of priority country	:U.S.A.	(72)**Name of Inventor :** **1)PATRICK D. ABBOTT**
(86) International Application No	:PCT/US2010/052167	
Filing Date	:11/10/2010	
(87) International Publication No	:WO 2011/046869 A2	
(61) Patent of Addition to Application Number	:NA	
Filing Date	:NA	
(62) Divisional to Application Number	:NA	
Filing Date	:NA	

(57) Abstract :
An operating strategy for effectively operating a system, such as a boiler system, is provided by quantifying operation of the system based on failure characteristics modeled in a computer processor performing failure mode and effects analysis (FMEA) to forecast damage mechanisms from operational parameters. One method includes determining operational consequences from inherent damage impact of fixed operational parameters, enabling instruments for operation with the processor for monitoring and diagnosing potential damage mechanisms, forming a graphic component map sufficient for user review of preselected system locations, and developing macroscopic in-service and out-of-service condition monitoring plans for the system. Detailed condition monitoring plans are then created from the macroscopic plans by the processor classifying each damage mechanism as one of active, incipient, incidental and passive, and processing each classified damage mechanism based on industry and local historical data for providing yield indices and propensities as reference for the FMEA.

No. of Pages : 55 No. of Claims : 15

(12) PATENT APPLICATION PUBLICATION
(19) INDIA
(22) Date of filing of Application :12/04/2012
(21) Application No.3295/CHENP/2012 A
(43) Publication Date : 05/07/2013

(54) Title of the invention : METHODS AND SYSTEMS FOR EXPLOITATION OF WELL-CONNECTED NODES IN PEER-TO-PEER WIRELESS NETWORKS

(51) International classification :H04L29/08H04W40/24
(31) Priority Document No :12/575,465
(32) Priority Date :07/10/2009
(33) Name of priority country :U.S.A.
(86) International Application No :PCT/US2010/051718
Filing Date :06/10/2010
(87) International Publication No :WO 2011/044304 A3
(61) Patent of Addition to Application Number :NA
Filing Date :NA
(62) Divisional to Application Number :NA
Filing Date :NA

(71)**Name of Applicant :**
1)QUALCOMM INCORPORATED
Address of Applicant :INTERNATIONAL IP ADMINISTRATION, 5775 MOREHOUSE DRIVE, SAN DIEGO, CALIFORNIA 92121-1714 U.S.A.
(72)**Name of Inventor :**
1)J. RODNEY WALTON
2)JOHN W. KETCHUM
3)OLIVER MICHAELIS

(57) Abstract :
Certain embodiments of the present disclosure relate to a method for increasing a capacity in a peer-to-peer (P2P) wireless network. A scheme has been proposed in which well-connected nodes of the P2P wireless network can be exploited in a manner that increases the overall connectivity of all the nodes in the network.

No. of Pages : 32 No. of Claims : 48

(12) PATENT APPLICATION PUBLICATION
(21) Application No.3280/CHENP/2012 A
(19) INDIA
(22) Date of filing of Application :12/04/2012
(43) Publication Date : 05/07/2013

(54) Title of the invention : CONCENTRATOR FOR SOLAR ENERGY GENERATION AND PRODUCTION THEREOF FROM POLYMERIC MATERIALS

(51) International classification	:G02B5/10F24J2/10F24J 2/14	(71)**Name of Applicant :**
(31) Priority Document No	:10 2009 045 582.5	**1)EVONIK DEGUSSA GMBH**
(32) Priority Date	:12/10/2009	Address of Applicant :RELLINGHAUSER STRASSE 1-11, 45128 ESSEN Germany
(33) Name of priority country	:Germany	(72)**Name of Inventor :**
(86) International Application No	:PCT/EP2010/063065	**1)NUMRICH, UWE**
Filing Date	:07/09/2010	**2)ARNDT, THOMAS**
(87) International Publication No	:WO 2011/045121 A1	**3)ARNOLD, WERNER**
(61) Patent of Addition to Application Number	:NA	**4)OLBRICH, MICHAEL**
Filing Date	:NA	
(62) Divisional to Application Number	:NA	
Filing Date	:NA	

(57) Abstract :
The present invention relates to a concentrator for concentrating solar radiation and to the production thereof from polymeric materials. The concentrator according to the invention can be used in photovoltaically or in particular in solar thermally usable systems. The concentrator according to the invention allows for the efficient concentration of solar radiation onto objects such as solar cells, independent of the geometry thereof. This relates, for example, to the surface of a solar cell as it is used in concentrating photovoltaics, and also an absorber tube as it is used in concentrating solar heating, for example in the scope of the parabolic trough technology

No. of Pages : 27 No. of Claims : 22

(12) PATENT APPLICATION PUBLICATION
(21) Application No.3281/CHENP/2012 A
(19) INDIA
(22) Date of filing of Application :12/04/2012
(43) Publication Date : 05/07/2013

(54) Title of the invention : MOBILE INFORMATION APPARATUS AND DISPLAY CONTROL METHOD

(51) International classification :H04M1/73G06F3/048
(31) Priority Document No :2009-214440
(32) Priority Date :16/09/2009
(33) Name of priority country :Japan
(86) International Application No :PCT/JP2010/063249
Filing Date :05/08/2010
(87) International Publication No :WO 2011/033877 A1
(61) Patent of Addition to Application Number :NA
Filing Date :NA
(62) Divisional to Application Number :NA
Filing Date :NA

(71)**Name of Applicant :**
1)NEC CORPORATION
Address of Applicant :7-1, SHIBA 5-CHOME, MINATO-KU, TOKYO 108-8001 Japan
(72)**Name of Inventor :**
1)ISHII, JUNICHI

(57) Abstract :
Multiple displays are arranged such that their display surfaces are arrayed side by side. A measurement section measures orientation information about apparatus orientation. A control section determines the display surface a user is viewing from among multiple displays, based on the orientation information measured by the measurement section. The control section causes the display surface of displays, other than the display surface determined as being viewed by the user, to become darker than the display surface of the display determined as being viewed by the user.

No. of Pages : 42 No. of Claims : 21

(12) PATENT APPLICATION PUBLICATION
(19) INDIA
(22) Date of filing of Application :12/04/2012
(21) Application No.3284/CHENP/2012 A
(43) Publication Date : 05/07/2013

(54) Title of the invention : MOBILE TERMINAL

(51) International classification :H04M1/02H05K7/00
(31) Priority Document No :2009-237180
(32) Priority Date :14/10/2010
(33) Name of priority country :Japan
(86) International Application No :PCT/JP2010/006121
Filing Date :14/10/2010
(87) International Publication No :WO 2011/045940 A1
(61) Patent of Addition to Application Number :NA
Filing Date :NA
(62) Divisional to Application Number :NA
Filing Date :NA

(71)**Name of Applicant :**
1)PANASONIC CORPORATION
Address of Applicant :1006, OAZA KADOMA, KADOMA-SHI, OSAKA 571-8501 Japan
(72)**Name of Inventor :**
1)AIKAWA, TOSHIHARU

(57) Abstract :
A problem of the invention is to, while miniaturizing a coupling portion for coupling first and second cases constituting a portable terminal, prevent a cable that is passed through the coupling portion, from being raised, and fix the cable to the coupling portion with adjusting an extra length of the cable. The portable terminal of the invention includes: a first case a second case : a coupling portion which swingably couples the first case and the second case to each other, and which includes a bearing portion that rotatably holds a shaft portion having a hollow portion; and a cable which is passed through the shaft portion. The coupling portion includes a fixing portion which clamps the cable that is passed through the hollow portion of the shaft member. The fixing portion includes: a notch portion which has a width that is smaller than the diameter of the cable, and into which the cable is clamped! and a hook portion which has a width that is smaller than the narrowest width of the notch portion, and which prevents the cable clamped into the notch portion, from slipping off.

No. of Pages : 32 No. of Claims : 4

(12) PATENT APPLICATION PUBLICATION
(19) INDIA
(22) Date of filing of Application :14/03/2012
(21) Application No.934/CHE/2012 A
(43) Publication Date : 05/07/2013

(54) Title of the invention : CLIMBING VIBRATION-DRIVEN ROBOT•

(51) International classification :B81B
(31) Priority Document No :201110461296.3
(32) Priority Date :30/12/2011
(33) Name of priority country :China
(86) International Application No :NA
Filing Date :NA
(87) International Publication No : NA
(61) Patent of Addition to Application Number :NA
Filing Date :NA
(62) Divisional to Application Number :NA
Filing Date :NA

(71)**Name of Applicant :**
1)INNOVATION FIRST INC.
Address of Applicant :1519 Int. 30 W. Greenville Texas 75402 United States of America U.S.A.
(72)**Name of Inventor :**
1)Robert H. Mimlitch III
2)David Anthony Norman
3)Jeffrey R. Waegelin
4)Gregory E. Needel
5)Guijiang Li

(57) Abstract :
An apparatus includes a housing, a rotational motor situated within the housing, a vibrating mechanism, and a plurality of appendages each having an appendage base proximal to the housing and an appendage tip distal from the housing. One or more of the appendages are adapted to cause the apparatus to move across a surface in a forward direction generally defined by a longitudinal offset between the appendage base and the appendage tip, and the appendages include two or more appendages disposed such that the appendage tips of the two or more appendages are adapted to contact opposing surfaces to produce a net force in a direction generally defined by a longitudinal offset between the appendage base and the appendage tip of the two or more appendages as the vibrating mechanism causes the apparatus to vibrate. The net force can allow the apparatus to climb when the opposing surfaces are inclined.

No. of Pages : 95 No. of Claims : 45

(12) PATENT APPLICATION PUBLICATION
(21) Application No.4613/CHE/2011 A
(19) INDIA
(22) Date of filing of Application :27/12/2011
(43) Publication Date : 05/07/2013

(54) Title of the invention : A SYNERGISTIC SALT SUPPLEMENTED HERBAL COMPOSITION AND PROCESS FOR PREPARATION OF SAME

(51) International classification :A61K36/00
(31) Priority Document No :NA
(32) Priority Date :NA
(33) Name of priority country :NA
(86) International Application No :NA
Filing Date :NA
(87) International Publication No : NA
(61) Patent of Addition to Application Number :NA
Filing Date :NA
(62) Divisional to Application Number :NA
Filing Date :NA

(71)**Name of Applicant :**
1)Dalmia Centre for Research and Development
Address of Applicant :10/8 Bharathi Park Main Road SAHSC Post Saibaba Colony Coimbatore 641043 Tamilnadu India Orissa India
(72)**Name of Inventor :**
1)S. Lakshmisubramanian
2)K. Nalini

(57) Abstract :
Disclosed herein is a synergistic supplemented herbal composition and process for preparing the same. The said herbal composition comprises 0.1 5% extract of herbs in powder form namely Achyranthes aspera Woodfordia furiticosa Solanum xanthocarpum Justicia adhatoda Acacia arabica Zingiber officinalis Syzygium aromaticum bud Sygygium aromaticum oil Curcuma longa Holarrhena antidysentercia Enicostemma littorale Calotropis procera Piper longum Piper nigrum Elettaaria Cardamomum and 95-99% edible refined salt used for treatment of allergy related illnesses. The process for preparing said composition comprises extracting 0.1 to 5% of herbs with hydro alcoholic solvent spray drying the said extract into powder form and thereafter blending it with 95%-99.9% refined salt to get the required composition.

No. of Pages : 20 No. of Claims : 12

(12) PATENT APPLICATION PUBLICATION
(19) INDIA
(22) Date of filing of Application :28/12/2011
(21) Application No.4618/CHE/2011 A
(43) Publication Date : 05/07/2013

(54) Title of the invention : STEP-UP SYSTEM FOR HYDEL POWER PROJECTS

(51) International classification :F03B
(31) Priority Document No :NA
(32) Priority Date :NA
(33) Name of priority country :NA
(86) International Application No :NA
Filing Date :NA
(87) International Publication No : NA
(61) Patent of Addition to Application Number :NA
Filing Date :NA
(62) Divisional to Application Number :NA
Filing Date :NA

(71)**Name of Applicant :**
1)MOHAMMED IBRAHIM PUTHIYAVEEDU
Address of Applicant :DOOR NO. 5, PUTHIYAVEEDU. KANNANOOR, P.O, NHANGATTIRI, PALAKKAD-679 311. Kerala India
(72)**Name of Inventor :**
1)MOHAMMED IBRAHIM PUTHIYAVEEDU

(57) Abstract :
Step-up system for hydel power projects (Figure-4) having water supply through a penstock pipes from a water reservoir to turbine coupled with a generator for producing electricity characterised by the improvement of efficiency of the hydel project comprises of a series of penstock pipes with a proportional length to the diameter of the penstock pipes and turbine coupled generators which is suitable to capacity of water flow fixed at the other ends. The length of the penstock pipes can decrease by increasing the diameter and more generators can accommodate in whole length of the system to increase the production. The length of the penstock pipes can decrease by decreasing the capacity of generator and reduce water usage and more generators can accommodate in whole length of the system in one series.

No. of Pages : 12 No. of Claims : 6

(12) PATENT APPLICATION PUBLICATION
(21) Application No.8639/CHENP/2011 A
(19) INDIA
(22) Date of filing of Application :23/11/2011
(43) Publication Date : 05/07/2013

(54) Title of the invention : METHOD FOR CONFIGURING TRANSMIT POWER OF SOUNDING REFERENCE SIGNAL, NETWORK DEVICE AND UE

(51) International classification :H04W52/00
(31) Priority Document No :200910083197.9
(32) Priority Date :05/05/2009
(33) Name of priority country :China
(86) International Application No :PCT/CN2010/072468
Filing Date :05/05/2010
(87) International Publication No :WO 2010/127623 A1
(61) Patent of Addition to Application Number :NA
Filing Date :NA
(62) Divisional to Application Number :NA
Filing Date :NA

(71)**Name of Applicant :**
1)CHINA ACADEMY OF TELECOMMUNICATIONS TECHNOLOGY
Address of Applicant :NO. 40 XUEYUAN,RD., HAIDIAN DISTRICT BEIJING 100191 China
(72)**Name of Inventor :**
1)GAO, QIUBIN
2)SHEN, ZUKANG
3)MIAO, DESHAN
4)PAN, XUEMING
5)SUN, SHAOHUI

(57) Abstract :
The present invention provides two methods for configuring transmit power of sounding reference signal (SRS), a network device and a UE. One of the methods includes: with a network device, determining SRS transmit power parameters according to power level of signal previously sent from a UE received by each cell to be detected and/or information of cells to be detected by the UE, and sending the SRS transmit power parameters to the UE. The present invention can have an overall consideration on path losses of multiple cells to be detected when calculating the SRS transmit power. Therefore, the power of the cell having poor channel quality for receiving SRS can be guaranteed, in order to ensure the accuracy of channel estimation.

No. of Pages : 18 No. of Claims : 19

(12) PATENT APPLICATION PUBLICATION
(19) INDIA
(22) Date of filing of Application :27/12/2011
(21) Application No.4601/CHE/2011 A
(43) Publication Date : 05/07/2013

(54) Title of the invention : METHODS FOR ANALYZING A DATABASE AND DEVICES THEREOF

(51) International classification	:G06F
(31) Priority Document No	:NA
(32) Priority Date	:NA
(33) Name of priority country	:NA
(86) International Application No	:NA
Filing Date	:NA
(87) International Publication No	: NA
(61) Patent of Addition to Application Number	:NA
Filing Date	:NA
(62) Divisional to Application Number	:NA
Filing Date	:NA

(71)**Name of Applicant :**
1)INFOSYS LIMITED
Address of Applicant :IP CELL, PLOT NO.44, ELECTRONIC CITY, HOSUR ROAD, BANGALORE - 560 100 Karnataka India
(72)**Name of Inventor :**
1)VIGNESH RAJARAM

(57) Abstract :
A method, non-transitory computer readable medium, and apparatus for analyzing a database includes obtaining SQL code defining one or more databases, each including a plurality of objects, wherein the SQL code is stored on one or more database servers. Defects in the SQL code are identified by applying a plurality of rules to the SQL code. Information regarding each identified defect is stored. The information regarding each identified defect is selectively provided to one or more defect closing interface modules. REF FIG: 2

No. of Pages : 32 No. of Claims : 18

(12) PATENT APPLICATION PUBLICATION
(19) INDIA
(22) Date of filing of Application :27/12/2011
(21) Application No.4602/CHE/2011 A
(43) Publication Date : 05/07/2013

(54) Title of the invention : METHODS FOR ASSESSING DATA CENTER EFFICIENCY AND DEVICES THEREOF

(51) International classification :G06F
(31) Priority Document No :NA
(32) Priority Date :NA
(33) Name of priority country :NA
(86) International Application No :NA
Filing Date :NA
(87) International Publication No : NA
(61) Patent of Addition to Application Number :NA
Filing Date :NA
(62) Divisional to Application Number :NA
Filing Date :NA

(71)**Name of Applicant :**
1)INFOSYS LIMITED
Address of Applicant :IP CELL, PLOT NO 44, ELECTRONICS CITY, HOSUR ROAD, BANGALORE 560 100 Karnataka India
(72)**Name of Inventor :**
1)NAGARAJAN VIJAYKUMAR
2)VISHWANATH K. NARAYAN

(57) Abstract :
A method, non-transitory computer readable medium, and apparatus for assessing efficiency of a data center includes querying, based on a system management protocol, each of a plurality of information technology (IT) devices to obtain utilization information. A power rating value is obtained for each of the plurality of IT devices. An IT power consumption value for the plurality of IT devices is generated based on the utilization information for the plurality of IT devices and the power rating values. A value for at least one efficiency metric is generated and output based on the IT power consumption value.

No. of Pages : 24 No. of Claims : 18

(12) PATENT APPLICATION PUBLICATION
(21) Application No.9851/CHENP/2011 A
(19) INDIA
(22) Date of filing of Application :27/12/2011
(43) Publication Date : 05/07/2013

(54) Title of the invention : CROSS POINT VARIABLE RESISTANCE NONVOLATILE MEMORY DEVICE

(51) International classification :G11C13/00
(31) Priority Document No :2010-128354
(32) Priority Date :03/06/2010
(33) Name of priority country :Japan
(86) International Application No :PCT/JP2011/003125
Filing Date :02/06/2011
(87) International Publication No :WO 2011/152061 A1
(61) Patent of Addition to Application Number :NA
Filing Date :NA
(62) Divisional to Application Number :NA
Filing Date :NA

(71)**Name of Applicant :**
1)PANASONIC CORPORATION
Address of Applicant :1006, OAZA KADOMA, KADOMA-SHI, OSAKA 571-8501 Japan
(72)**Name of Inventor :**
1)AZUMA, RYOTARO
2)SHIMAKAWA, KAZUHIKO

(57) Abstract :
A cross point variable resistance nonvolatile memory device includes memory cells having the same orientation for stable characteristics of all layers. Each memory cell (51) is placed at a different one of cross points of bit lines (53) in an X direction and word lines (52) in a Y direction formed in layers. In a multilayer cross point structure where vertical array planes sharing the word lines are aligned in the Y direction each for a group of bit lines aligned in a Z direction, even and odd layer bit line selection switch elements (57, 58) switch electrical connection and disconnection between a global bit line (56) and commonly-connected even layer bit lines and commonly-connected odd layer bit lines, respectively. A bidirectional current limiting circuit (92) having parallel-connected P-type current limiting element (91) and N-type current limiting element (90) is provided between the global bit line and the switch elements.

No. of Pages : 189 No. of Claims : 29

(12) PATENT APPLICATION PUBLICATION
(21) Application No.4660/CHE/2011 A
(19) INDIA
(22) Date of filing of Application :30/12/2011
(43) Publication Date : 05/07/2013

(54) Title of the invention : INTELLIGENT MEDIATION OF MESSAGES IN A HEALTHCARE PRODUCT INTEGRATION PLATFORM

(51) International classification :H04L
(31) Priority Document No :NA
(32) Priority Date :NA
(33) Name of priority country :NA
(86) International Application No :NA
Filing Date :NA
(87) International Publication No : NA
(61) Patent of Addition to Application Number :NA
Filing Date :NA
(62) Divisional to Application Number :NA
Filing Date :NA

(71)**Name of Applicant :**
1)GENERAL ELECTRIC COMPANY
Address of Applicant :1 RIVER ROAD, SCHENECTADY, NEW YORK 12345 U.S.A.
(72)**Name of Inventor :**
1)AHMED, RIZWAN
2)VIJAYAN, VISHAL

(57) Abstract :
An example method to mediate messages in a product integration platform includes receiving a message request from a source healthcare system where the message request contains a message payload. The example method includes determining an interface to be used to route the message to a target healthcare system. The example method includes creating a platform message based on the message request. The example method includes adapting the platform message into a message format expected by the interface and routing the platform message to the interface.

No. of Pages : 55 No. of Claims : 21

(12) PATENT APPLICATION PUBLICATION
(21) Application No.4661/CHE/2011 A
(19) INDIA
(22) Date of filing of Application :30/12/2011
(43) Publication Date : 05/07/2013

(54) Title of the invention : PLUGGABLE DISPLAY WITH WIRELESS POWER AND DATA TRANSFER

(51) International classification	:H04W	(71)**Name of Applicant :**
(31) Priority Document No	:NA	**1)SCHNEIDER ELECTRIC INDIA PRIVATE LIMITED**
(32) Priority Date	:NA	Address of Applicant :#44P,PHASE ELECTRONIC CITY
(33) Name of priority country	:NA	PHASE-2, HOSUR ROAD, BANGALORE-560100 Karnataka
(86) International Application No	:NA	India
Filing Date	:NA	(72)**Name of Inventor :**
(87) International Publication No	: NA	**1)NAVEEN SHANKAR**
(61) Patent of Addition to Application Number	:NA	**2)HITENDRA VYAS**
Filing Date	:NA	**3)SUDHIR PATIL**
(62) Divisional to Application Number	:NA	**4)RENE JONKER**
Filing Date	:NA	**5)KIRAN RUDRAPPA**

(57) Abstract :
The invention discloses a pluggable display device with wireless power and data transfer remotely from a measuring unit of an electrical metering device. The display device includes a secondary coil for establishing a wireless electro-dynamic induction link for power and data transmission from a primary coil located in the measuring unit, a control unit for energizing the display device from transmitted power and generating electrical signal from the transmitted data, and a display unit for displaying one or more electrical parameter based on the generated electrical signal. The secondary coil is aligned co-axially with the primary coil and is placed in proximity to achieve maximum efficiency in wireless transmission. A mounting means is provided for engaging the display device with the measuring unit and co-axially aligning the secondary coil with the primary coil.

No. of Pages : 15 No. of Claims : 8

(12) PATENT APPLICATION PUBLICATION
(21) Application No.4662/CHE/2011 A
(19) INDIA
(22) Date of filing of Application :30/12/2011
(43) Publication Date : 05/07/2013

(54) Title of the invention : INTEGRATED LIQUID COOLED INTAKE MANIFOLD

(51) International classification :F02B
(31) Priority Document No :NA
(32) Priority Date :NA
(33) Name of priority country :NA
(86) International Application No :NA
Filing Date :NA
(87) International Publication No : NA
(61) Patent of Addition to Application Number :NA
Filing Date :NA
(62) Divisional to Application Number :NA
Filing Date :NA

(71)**Name of Applicant :**
1)ASHOK LEYLAND LIMITED
Address of Applicant :NO.1, SARDAR PATEL ROAD, GUINDY, CHENNAI 600032 Tamil Nadu India
(72)**Name of Inventor :**
1)G. SAI VENKATESH
2)KRISHNAN SADAGOPAN

(57) Abstract :
An integrated liquid cooled intake manifold incorporates cooling passages for temperature reduction of charge air from the turbo charged compressor. The intake manifold includes a plenum chamber for collecting and passing the charged air from the turbo charged compressor to the engine intake. Runners are provided to direct the charged air to flow towards intake ports of engine cylinder head. A turbocharger having turbine and compressor is provided for compressing the fresh air from the air inlet to produce charged air, wherein the exhaust gas from the exhaust manifold acts on the turbine to drive the mechanically connected compressor. The intake manifold incorporates cooling passages integrally formed around the intake manifold for temperature reduction of charged air from the compressor to engine intake through the intake manifold. The heat transfer takes place such that, when the charged air enters the intake manifold plenum, the heat from the charged air is transferred to the coolant through the plenum wall and the cooling passages.

No. of Pages : 21 No. of Claims : 9

(12) PATENT APPLICATION PUBLICATION
(21) Application No.4632/CHE/2011 A
(19) INDIA
(22) Date of filing of Application :28/12/2011
(43) Publication Date : 05/07/2013

(54) Title of the invention : PROCESS FOR PREPARING CRYSTALLINE SORAFENIB TOSYLATE

(51) International classification :C07D
(31) Priority Document No :NA
(32) Priority Date :NA
(33) Name of priority country :NA
(86) International Application No :NA
Filing Date :NA
(87) International Publication No : NA
(61) Patent of Addition to Application Number :NA
Filing Date :NA
(62) Divisional to Application Number :NA
Filing Date :NA

(71)**Name of Applicant :**
1)SHILPA MEDICARE LIMITED
Address of Applicant :R&D UNIT, SURVEY NO.207, MODAVALASA, VIZIANAGARAM DIST 531162. Andhra Pradesh India
(72)**Name of Inventor :**
1)PUROHIT, PRASHANTH
2)SRIRAM, RAMPALLI
3)VIJAYA MURALI MOHANRAO, SESHAGIRI
4)LAVKUMAR, UPALLA

(57) Abstract :
The present invention relates to the process for the preparation of polymorph I of sorafenib tosylate using t-Butanol and also using ethyl acetate and polyethylene glycol as solvent

No. of Pages : 15 No. of Claims : 6

(12) PATENT APPLICATION PUBLICATION
(21) Application No.4637/CHE/2011 A
(19) INDIA
(22) Date of filing of Application :28/12/2011
(43) Publication Date : 05/07/2013

(54) Title of the invention : LOW COST UNIQUE IDENTIFICATION GENERATION USING COMBINATION OF PATTERNS AND UNIQUE CODE IMAGES

(51) International classification :H04L
(31) Priority Document No :NA
(32) Priority Date :NA
(33) Name of priority country :NA
(86) International Application No :NA
Filing Date :NA
(87) International Publication No : NA
(61) Patent of Addition to Application Number :NA
Filing Date :NA
(62) Divisional to Application Number :NA
Filing Date :NA

(71)**Name of Applicant :**
1)Sasken Communication Technology Ltd
Address of Applicant :Sasken Communication Technology Ltd 139/25 Domlur Ring Road Bangalore India Maharashtra India
(72)**Name of Inventor :**
1)Venkatesh . G

(57) Abstract :
The embodiments disclosed herein relates to a method and system for authentication of an object by forming a unique ID for the object. An authentication server identifies a unique natural pattern associated with the object to be authorized. For the identified pattern the authentication server assigns a unique ID. The pattern and unique ID are then stored in a database. The unique ID is then pasted on the object. For authentication an image of the object with unique ID is captured and is sent to the authentication server for authentication. The authentication server first extracts from the received second image the unique ID which is then used to retrieve from the database the stored pattern corresponding to it. The pattern in the received second image is then compared with the original pattern retrieved from the database. Based on the comparison the system confirms authenticity of the object.

No. of Pages : 42 No. of Claims : 17

(12) PATENT APPLICATION PUBLICATION
(21) Application No.1873/CHENP/2008 A
(19) INDIA
(22) Date of filing of Application :15/04/2008
(43) Publication Date : 05/07/2013

(54) Title of the invention : A MODIFIED POPULATION OF CELLS DIFFERENTIATED FROM PRIMATE PLURIPOTENT STEM (PPS) CELLS•

(51) International classification : C12N 15/09
(31) Priority Document No :
(32) Priority Date :01/01/2012
(33) Name of priority country :Argentina
(86) International Application No :PCT/US2001/044309
Filing Date :26/11/2001
(87) International Publication No :WO/2002/042445
(61) Patent of Addition to Application Number :NA
Filing Date :NA
(62) Divisional to Application Number :00782/CHENP/2003
Filed on :21/05/2003

(71)**Name of Applicant :**
1)GERON CORPORATION
Address of Applicant :230 Constitution Drive Menlo Park CA 94025 U.S.A
(72)**Name of Inventor :**
1)Gold, Joseph, Daniel
2)Lebrowski, Jane, Stephanie

(57) Abstract :
The present invention relates to a modified population of cells differentiated from primate pluripotent stem (pPS) cells cultured ex vivo, which is essentially free of undifferentiated cells.

No. of Pages : 79 No. of Claims : 29

(12) PATENT APPLICATION PUBLICATION
(21) Application No.2094/CHE/2012 A
(19) INDIA
(22) Date of filing of Application :25/05/2012
(43) Publication Date : 05/07/2013

(54) Title of the invention : SEAT SLIDE LOCKING APPARATUS

(51) International classification	:E06B 9/00
(31) Priority Document No	:2011-118946
(32) Priority Date	:27/05/2011
(33) Name of priority country	:Japan
(86) International Application No	:NA
Filing Date	:NA
(87) International Publication No	: NA
(61) Patent of Addition to Application Number	:NA
Filing Date	:NA
(62) Divisional to Application Number	:NA
Filing Date	:NA

(71)**Name of Applicant :**
1)DELTA KOGYO CO., LTD.
Address of Applicant :1-14, SHINCHI, FUCHU-CHO, AKI-GUN, HIROSHIMA Japan
(72)**Name of Inventor :**
1)WAKAYAMA HIROYUKI
2)DOMOTO YASUHITO

(57) Abstract :
A seat slide locking apparatus comprises a lower rail provided with a plurality of locking holes, and a plurality of locking pieces provided on the lower rail. The locking pieces include a first locking piece 4a having a broad width inserting section 46 and a second locking piece 4b having a narrow width inserting section 47, and are held by a holding member which has a holding hole 66. The holding hole 66 includes a broad width section 66a into which the broad width inserting section 46 is inserted and a narrow width section 66b into which the narrow width inserting section 47 is inserted.

No. of Pages : 40 No. of Claims : 7

(12) PATENT APPLICATION PUBLICATION
(19) INDIA
(22) Date of filing of Application :03/04/2012
(21) Application No.3029/CHENP/2012 A
(43) Publication Date : 05/07/2013

(54) Title of the invention : PERIPHERAL INFORMATION DISPLAY SYSTEM, DISPLAY DEVICE, AND PERIPHERAL

(51) International classification	:H04N7/173,G06F13/14, G06F3/14
(31) Priority Document No	:2009-224514
(32) Priority Date	:29/09/2009
(33) Name of priority country	:Japan
(86) International Application No	:PCT/JP2010/064228
Filing Date	:24/08/2010
(87) International Publication No	:WO 2011/040152 A1
(61) Patent of Addition to Application Number	:NA
Filing Date	:NA
(62) Divisional to Application Number	:NA
Filing Date	:NA

(71)**Name of Applicant :**
1)SHARP KABUSHIKI KAISHA
Address of Applicant :22-22, NAGAIKE-CHO, ABENO-KU, OSAKA-SHI, OSAKA-SHI, OSAKA 545-8522 Japan
(72)**Name of Inventor :**
1)TANAKA, RYUTA
2)HASEGAWA, HIROSHI
3)KIMURA, KENICHI
4)YOSHIDA, TATSUYA
5)SATOH, YOSHINORI

(57) Abstract :
A peripheral information display with enhanced expandability by enabling the customisation and display of peripheral related data such as status information for each peripheral. The peripheral information display system is configured from a TV (20) and a recorder (10) connected with a HDMI connection. The TV (20) is equipped with a memory portion (29) that stores display region information comprising region identification information used to identify a display region for arranging the peripheral related data of the recorder (10) . The recorder (10) is equipped with a LAN I/F18 which transmits the peripheral related data of the recorder (10) in association with the region identification information to the TV (20) in response to the display region information acquired from the TV (20). The TV (20) displays the peripheral related data transmitted from the recorder (10) in the display region identified using the region identification information.

No. of Pages : 53 No. of Claims : 10

(12) PATENT APPLICATION PUBLICATION
(19) INDIA
(22) Date of filing of Application :03/04/2012
(21) Application No.3030/CHENP/2012 A
(43) Publication Date : 05/07/2013

(54) Title of the invention : POWER SAVING SYSTEM AND POWER SAVING METHOD

(51) International classification :H04L12/28,G06F1/32,G06F9/46,G06F9/50
(31) Priority Document No :2009-233366
(32) Priority Date :07/10/2009
(33) Name of priority country :Japan
(86) International Application No :PCT/JP2010/067414
Filing Date :05/10/2010
(87) International Publication No :WO 2011/043317 A1
(61) Patent of Addition to Application Number :NA
Filing Date :NA
(62) Divisional to Application Number :NA
Filing Date :NA

(71)**Name of Applicant :**
1)NEC CORPORATION
Address of Applicant :7-1, SHIBA 5-CHOME, MINATO-KU, TOKYO 108-8001 Japan
(72)**Name of Inventor :**
1)MURAKAMI, TAKAHIKO
2)YAMATO, JUNICHI

(57) Abstract :
Devices and interior equipments that need not operate in a server room are stopped and thereby power saving can be achieved. More specifically, consolidation of virtual machines (VMs) providing a service is performed to concentrate processing in a server in a certain rack among a group of racks in the server room, a rack having no operating server is stopped, processing by an interior equipment controlling the rack and its circumference environment also is stopped or adjusted, and thereby power saving can be achieved.

No. of Pages : 73 No. of Claims : 16

(12) PATENT APPLICATION PUBLICATION
(21) Application No.36/CHE/2012 A
(19) INDIA
(22) Date of filing of Application :03/01/2012
(43) Publication Date : 05/07/2013

(54) Title of the invention : NOVEL 2,3-DIHALO-4,4-BIS-(ARYL)-BUT-2-ENOIC ACID - AMIDES

(51) International classification :C07C
(31) Priority Document No :NA
(32) Priority Date :NA
(33) Name of priority country :NA
(86) International Application No :NA
Filing Date :NA
(87) International Publication No : NA
(61) Patent of Addition to Application Number :NA
Filing Date :NA
(62) Divisional to Application Number :NA
Filing Date :NA

(71)**Name of Applicant :**
1)PNB VESPER LIFE SCIENCE PVT LIMITED
Address of Applicant :5TH FLOOR, AMRITHA TOWERS, MG ROAD, COCHIN 680721, KERALA, INDIA
(72)**Name of Inventor :**
1)PADINJARETHALAKKAL NANU EZHUTHASSAN BALARAM
2)DR. PORNTHIP LATTMANN

(57) Abstract :
The present invention relates to novel compounds of formula (I): wherein X, R and Aryl are selected as previously specified. In the present invention novel bisarylated butenoic amides and further derivatives are described as novel medicines. The invention relates to CCK antagonists and opiate agonists and their medicinal applications, but is not limited to these underlying biological mechanisms.

No. of Pages : 47 No. of Claims : 20

(12) PATENT APPLICATION PUBLICATION
(19) INDIA
(22) Date of filing of Application :09/04/2012
(21) Application No.3145/CHENP/2012 A
(43) Publication Date : 05/07/2013

(54) Title of the invention : METHOD AND SYSTEM FOR POWER MANAGEMENT

(51) International classification :H01J13/00
(31) Priority Document No :2152/CHE/2009
(32) Priority Date :07/09/2009
(33) Name of priority country :India
(86) International Application No :PCT/IB2010/00001
Filing Date :05/01/2010
(87) International Publication No :WO/2011/027195
(61) Patent of Addition to Application Number :NA
Filing Date :NA
(62) Divisional to Application Number :NA
Filing Date :NA

(71)**Name of Applicant :**
1)ABB TECHNOLOGY LTD
Address of Applicant :AFFOLTERNSTRASSE 44, CH-8050 ZURICH Switzerland
(72)**Name of Inventor :**
1)GANESH KULATHU
2)ARINJAI GUPTA
3)DIOGENIS PAPAEVANGELOU
4)OTTO VAN DER WAL
5)WOLFGANG WIMMER
6)MARTIN NYKVIST

(57) Abstract :
A method and a system for power management for a plant electrical network are provided. The power management system over a plant-wide communication network includes both concepts of hierarchical level and distributed level power management using multiple controllers. At least one controller in the power management system is configured for power management in a first local process area within the plant electrical network and is capable to communicate with at least a second controller configured for power management in a second local process area within the plant electrical network over the communication network.

No. of Pages : 32 No. of Claims : 32

(12) PATENT APPLICATION PUBLICATION
(21) Application No.3146/CHENP/2012 A
(19) INDIA
(22) Date of filing of Application :09/04/2012
(43) Publication Date : 05/07/2013

(54) Title of the invention : IMAGE FILE GENERATION DEVICE, IMAGE PROCESSING DEVICE, IMAGE FILE GENERATION METHOD, IMAGE PROCESSING METHOD, AND DATA STRUCTURE FOR IMAGE FILES

(51) International classification	:G06T15/00,G06F 12/00,G06T 11/80
(31) Priority Document No	:2009-245797
(32) Priority Date	:26/10/2009
(33) Name of priority country	:Japan
(86) International Application No	:PCT/JP2010/004809
Filing Date	:29/07/2010
(87) International Publication No	:WO 2011/052117 A1
(61) Patent of Addition to Application Number	:NA
Filing Date	:NA
(62) Divisional to Application Number	:NA
Filing Date	:NA

(71)**Name of Applicant :**
1)SONY COMPUTER ENTERTAINMENT INC.
Address of Applicant :1-7-1, KONAN, MINATO-KU, TOKYO 1080075 Japan
(72)**Name of Inventor :**
1)INADA, TETSUGO

(57) Abstract :
In a provided data structure for image files, hierarchical data, which contains image data for a single image at different resolutions in order by resolution, uses a structure comprising a header (150), index blocks (160), and image tiles (170). The header (150), which defines a plurality of regions that partition a pyramidal hierarchical structure in a virtual space which generates the hierarchical data, consists of a pointer to one of the index blocks (160) for each region. The index blocks (160), which are generated for each region in the structure defined in the header (150), consist of pointers to one image tiles (170) for each position in multilevel images belonging to each region. The image tiles (170) are the image data used when actually rendering the image.

No. of Pages : 131 No. of Claims : 40

(12) PATENT APPLICATION PUBLICATION
(19) INDIA
(22) Date of filing of Application :03/01/2012
(21) Application No.35/CHE/2012 A
(43) Publication Date : 05/07/2013

(54) Title of the invention : PROCESS FOR PREPARING AMORPHOUS CABAZITAXEL

(51) International classification :C07D
(31) Priority Document No :NA
(32) Priority Date :NA
(33) Name of priority country :NA
(86) International Application No :NA
Filing Date :NA
(87) International Publication No : NA
(61) Patent of Addition to Application Number :NA
Filing Date :NA
(62) Divisional to Application Number :NA
Filing Date :NA

(71)**Name of Applicant :**
1)SHILPA MEDICARE LIMITED
Address of Applicant :SHILPA MEDICARE LIMITED 2ND FLOOR, 10/80, RAJENDRA GUNJ, RAICHUR, KARNATAKA, INDIA
(72)**Name of Inventor :**
1)SHRAWAT; VIMAL KUMAR
2)PUROHIT; PRASHANT
3)RAFIUDDIN
4)SINGH; VINOD KUMAR

(57) Abstract :
The present invention provides a non-solvated amorphous form of (2 α ,5 β,7 β,10 β,13 α)-4-acetoxy-13-({(2R,3S)-3[(tert-butoxy carbonyl) amino]-2-hydroxy-3-phenylpropanoyl}oxy)-l-hydroxy-7,10-dimethoxy-9-oxo-5,20-epoxytax-ll-en-2-yl benzoate or Cabazitaxel (I), I'J and process for preparation thereof. The present application also provides a non-solvated amorphous form of (2a,56,76,106,13a)-4-acetoxy-13-({(2fi,3S)-3[(tert-butoxy carbonyl) amino]-2-hydroxy-3-phenylpropanoyl}oxy)-l-hydroxy-7,10-dimethoxy-9-oxo-5,20-epoxytax-ll-en-2-yl benzoate or Cabazitaxel (I) having an XRPD pattern as per Fig-1, and IR spectrum as per Fig-3 and is useful as an active pharmaceutical in a pharmaceutical composition comprising thereof and has anti-cancer activity.

No. of Pages : 31 No. of Claims : 9

(12) PATENT APPLICATION PUBLICATION
(21) Application No.4630/CHE/2011 A
(19) INDIA
(22) Date of filing of Application :28/12/2011
(43) Publication Date : 05/07/2013

(54) Title of the invention : SYSTEM AND METHOD FOR MANAGING LIFE-CYCLE OF BATCH IN PRODUCTION CONTROL SYSTEM IN REAL TIME•

(51) International classification :G06Q
(31) Priority Document No :NA
(32) Priority Date :NA
(33) Name of priority country :NA
(86) International Application No :NA
Filing Date :NA
(87) International Publication No : NA
(61) Patent of Addition to Application Number :NA
Filing Date :NA
(62) Divisional to Application Number :NA
Filing Date :NA

(71)**Name of Applicant :**
1)YOKOGAWA ELECTRIC CORPORATION
Address of Applicant :9-32 2-chome Nakacho Musashino-shi Tokyo 180-8750 Japan
(72)**Name of Inventor :**
1)Naveen Kashyap
2)Jagadeesh Narayanarao
3)Sastry Garimella

(57) Abstract :
The embodiments herein provide a system and method for managing life cycle of a batch in a production control system in real time. The system comprises of an enterprise management system manufacturing execution system (MES) task execution assistance (TEA) system and a production control system. The TEA system is interfaced between the MES and the production control system for executing the production request. The batch production request generated by the enterprise management system is received by the MES wherein the MES forwards the batch production request to the TEA system. The TEA system obtains information required to execute the batch production request from the production control system. Upon obtaining the information the TEA system instructs an operator to create the batch in the production control system. The production control system confirms the creation of the batch and updates real time status of the batch to the TEA system.

No. of Pages : 19 No. of Claims : 13

(12) PATENT APPLICATION PUBLICATION
(19) INDIA
(22) Date of filing of Application :16/04/2012
(21) Application No.3348/CHENP/2012 A
(43) Publication Date : 05/07/2013

(54) Title of the invention : METHOD AND APPARATUS FOR RECEIVING A DOWNLINK SIGNAL IN A WIRELESS COMMUNICATION SYSTEM SUPPORTING CARRIER AGGREGATION

(51) International classification	:H04J11/00,H04L 27/26
(31) Priority Document No	:61/293,121
(32) Priority Date	:08/01/2010
(33) Name of priority country	:U.S.A.
(86) International Application No	:PCT/KR2011/000079
Filing Date	:06/01/2011
(87) International Publication No	:WO 2011/083983 A3
(61) Patent of Addition to Application Number	:NA
Filing Date	:NA
(62) Divisional to Application Number	:NA
Filing Date	:NA

(71)**Name of Applicant :**
1)LG ELECTRONIC INC.
Address of Applicant :20 YEOUIDO-DONG, YEONGDEUNGPO-GU, SEOUL 150-721 Republic of Korea
(72)**Name of Inventor :**
1)MOON, SUNGHO
2)HAN, SEUNGHEE
3)CHUNG, JAEHOON

(57) Abstract :
The present invention relates to a method for receiving a downlink signal at a terminal in a wireless communication system. In particular, the method comprises: receiving a control channel to be transmitted to a specific subframe via a first carrier; and decoding a data channel corresponding to the control channel to be transmitted to the specific subframe via a second carrier, using at least one parameter included in the control channel, wherein information on the orthogonal frequency division multiplexing (OFDM) start symbol of data channels that are transmitted via each of at least one carrier allocated to the terminal is signaled through an upper layer

No. of Pages : 58 No. of Claims : 10

(12) PATENT APPLICATION PUBLICATION
(21) Application No.3350/CHENP/2012 A
(19) INDIA
(22) Date of filing of Application :16/04/2012
(43) Publication Date : 05/07/2013

(54) Title of the invention : METHOD AND MACHINE FOR AUTOMATIC ASSEMBLY OF COMPLEX CAGES FORMED FROM ELECTRO WELDED METAL NETS

(51) International classification :B21F27/12
(31) Priority Document No :UD2009A000201
(32) Priority Date :13/11/2008
(33) Name of priority country :Italy
(86) International Application No :PCT/EP2010/066672
Filing Date :03/11/2010
(87) International Publication No :WO 211/057923 A1
(61) Patent of Addition to Application Number :NA
Filing Date :NA
(62) Divisional to Application Number :NA
Filing Date :NA

(71)**Name of Applicant :**
1)A.W.M.S.P.A.
Address of Applicant :STRADA STATALE 13 PONTEBBANA KM 146 33010 MAGNANO IN RIVERA (UDINE) Italy
(72)**Name of Inventor :**
1)BERNARDINIS, CLAUDIO
2)THEOHARIDES, DIMITRIS
3)KALTEZIOTIS, DIMOS

(57) Abstract :
The present invention relates to a method and the associated machine for the automatic production and assembly of complex reticular cages, formed by simple cages, contained and encircled by an ultimate external enclosure cage or net. The automatic machine that carries out the aforementioned method in reality consists of a group of various machines and mechanical devices which are coordinated by suitable computerised systems, which comprise: a folding assembly (3) for electro-welded metal nets which is served by two automatic movable trolleys, one upstream (2) and the other downstream (6), for positioning the nets during the programmed folding phases; a temporary parking zone (41) or pre-assembly zone for the simple cages, downstream, with a subsequent final evacuation path- (42); overhead there is a plurality of automatically movable trolleys (44) which are equipped with suitable automatic grippers (5) for transporting and positioning the simple and/or complex cages.

No. of Pages : 32 No. of Claims : 10

(12) PATENT APPLICATION PUBLICATION
(21) Application No.4641/CHE/2011 A
(19) INDIA
(22) Date of filing of Application :29/12/2011
(43) Publication Date : 05/07/2013

(54) Title of the invention : AN IMPROVED SLIVER GUIDE ARRANGEMENT IN A TEXTILE MACHINE

(51) International classification :D01H
(31) Priority Document No :NA
(32) Priority Date :NA
(33) Name of priority country :NA
(86) International Application No :NA
Filing Date :NA
(87) International Publication No : NA
(61) Patent of Addition to Application Number :NA
Filing Date :NA
(62) Divisional to Application Number :NA
Filing Date :NA

(71)**Name of Applicant :**
1)LAKSHMI MACHINE WORKS LTD.
Address of Applicant :PERIANAICKENPALAYAM, COIMBATORE 641 020 Tamil Nadu India
(72)**Name of Inventor :**
1)NARAYANASWAMY KRISHNAKUMUR
2)VENKATESHAN NARENDRA
3)SELVARAJ GANESHKUMAR
4)VELANGANNI JOHN LAWRENCE

(57) Abstract :
The present invention relates to an improved sliver guide arrangement for use in textile sliver drawing machine. This invention presents that the sliver guides of a sliver drawing machine, comprises of bearing pin having lesser radius (Rb) than half of the sliver contact radius (Rs). This invention will be more advantageous as the braking torque is very less, so that better rotation of the sliver guide is established.

No. of Pages : 11 No. of Claims : 3

(12) PATENT APPLICATION PUBLICATION
(21) Application No.4642/CHE/2011 A
(19) INDIA
(22) Date of filing of Application :29/12/2011
(43) Publication Date : 05/07/2013

(54) Title of the invention : A CONTINUOUSLY VARIABLE TRANSMISSION•

(51) International classification :B60K
(31) Priority Document No :NA
(32) Priority Date :NA
(33) Name of priority country :NA
(86) International Application No :NA
Filing Date :NA
(87) International Publication No : NA
(61) Patent of Addition to Application Number :NA
Filing Date :NA
(62) Divisional to Application Number :NA
Filing Date :NA

(71)**Name of Applicant :**
1)SAURABH MARKANDEYA
Address of Applicant :3 SNEHDEEP APTS OPP. RAMANAND COLONY RAMANAGAR AURANGABAD 431005 MAHARASHTRA India
(72)**Name of Inventor :**
1)SAURABH MARKANDEYA

(57) Abstract :
The invention provides a continuously variable transmission for an automobile. The continuously variable transmission comprises of an input shaft which is configured for rotation about an axis. The input shaft receives an input from a source of power. A differential motion generator is coupled to the input shaft for altering the received input. The continuously variable transmission also includes a motion integrator which is coupled to the differential motion generator. The motion integrator transmits the altered input received from the differential motion generator to an output shaft.

No. of Pages : 23 No. of Claims : 8

(12) PATENT APPLICATION PUBLICATION
(21) Application No.4643/CHE/2011 A
(19) INDIA
(22) Date of filing of Application :29/12/2011
(43) Publication Date : 05/07/2013

(54) Title of the invention : 'INTEGRAL TURBINE' OF AN AUTOMATIC MOTOR WITH E.P.G

(51) International classification :F03G
(31) Priority Document No :NA
(32) Priority Date :NA
(33) Name of priority country :NA
(86) International Application No :NA
Filing Date :NA
(87) International Publication No : NA
(61) Patent of Addition to Application Number :NA
Filing Date :NA
(62) Divisional to Application Number :1171/CHE/2007
Filed on :07/06/2007

(71)**Name of Applicant :**
1)A.G.B. VETRIVEL
Address of Applicant :NO.28, VELLALAR STREET, SRIMUSHNAM 608 703, CUDDALORE DISTRICT Tamil Nadu India
(72)**Name of Inventor :**
1)A.G.B. VETRIVEL

(57) Abstract :
An Automatic motor is a machine or motor which can drive an Electrical Generator or a vehicle or a Fan or a Railway Engine or a ship or a Helicopter or all pumps or all Industrial Machinery, Equipments and any Rotary parts. The Mechanical Energy based Integral Turbine with E.P.G. (Electric and also Extra Power Generator - Mechanical Advantages of Efficiency is Increased) is a type of an Automatic Motor by Simple Machine Theory running by getting the Force of pressure in Natural Gravitational Force or Artificial compressed fluid mediator mechanism method by REPUBLIC (Recycle Effort of Power utilities by liberate Initial Current) Technology of Science in Dynamic theories. That is called Type of An AUTOMATIC MOTOR by INTEGRAL TURBINE WITH E.P.G. This Mechanical Energy based simple Machine is fully Zero percent (0%) Pollution Controlled and Economy Equipment. After this device use definitely the Global warming decrease and solve some higher percentage in timely. Twenty four hours a day, 365 days a year running in Non fuel (No need Liquid-Solid-Gas) energy based Perpetual Motion type (Machine) Equipment.

No. of Pages : 37 No. of Claims : 10

(12) PATENT APPLICATION PUBLICATION
(19) INDIA
(22) Date of filing of Application :02/01/2012
(21) Application No.6/CHE/2012 A
(43) Publication Date : 05/07/2013

(54) Title of the invention : PISTON STRUCTURE

(51) International classification :H01J
(31) Priority Document No :NA
(32) Priority Date :NA
(33) Name of priority country :NA
(86) International Application No :NA
Filing Date :NA
(87) International Publication No : NA
(61) Patent of Addition to Application Number :NA
Filing Date :NA
(62) Divisional to Application Number :NA
Filing Date :NA

(71)**Name of Applicant :**
1)LIN, CHUNG CHUAN
Address of Applicant :NO. 29, KUNGYEH, 15TH ROSD, TALI INDUSTRIAL DISTRICT, TAIPING, TAICHUNG CITY, Taiwan
(72)**Name of Inventor :**
1)LIN, CHUNG CHUAN

(57) Abstract :
A piston structure comprises: a head portion and an adjacent piston skirt portion, the piston skirt portion is formed with two pin holes, at both sides of each of the pin holes are formed two through holes which are connected to the pin holes by a passage, respectively. The piston structure is further formed with gaps to reduce the weight and area of the piston skirt portion, consequently reducing friction while improving smoothness of the movement of the piston structure. Besides, the arrangements of the through holes and the gaps can further reduce the weight of the piston structure while improving power output.

No. of Pages : 11 No. of Claims : 5

(12) PATENT APPLICATION PUBLICATION
(19) INDIA
(22) Date of filing of Application :27/12/2011
(21) Application No.4599/CHE/2011 A
(43) Publication Date : 05/07/2013

(54) Title of the invention : SYSTEM AND METHOD FOR SYSTEM INTEGRATION

(51) International classification :G06F
(31) Priority Document No :NA
(32) Priority Date :NA
(33) Name of priority country :NA
(86) International Application No :NA
Filing Date :NA
(87) International Publication No : NA
(61) Patent of Addition to Application Number :NA
Filing Date :NA
(62) Divisional to Application Number :NA
Filing Date :NA

(71)**Name of Applicant :**
1)INFOSYS LIMITED
Address of Applicant :IP CELL, PLOT NO.44, ELECTRONIC CITY, HOSUR ROAD, BANGALORE - 560 100 Karnataka India
(72)**Name of Inventor :**
1)NITIN MAHAJAN
2)GAURAV BHAGWAT
3)PARTHA CHAKRABORTY
4)GUNDA LAKSHMI NARASIMHA RAO
5)SANJAY KUMAR SURYADEVRA
6)NANDAN KALUSKAR
7)SATYABRATA BISWAS

(57) Abstract :
The present invention relates to a system and method of integration among software components. The method allows integration between data corresponding to a first set of software components and a second set of software components. This method also involves exposing Application Program Interfaces (APIs) to a plurality of end user applications, wherein the APIs allow communication among the at least one end user application, the first set of software components and the second set of software components.

No. of Pages : 22 No. of Claims : 22

(12) PATENT APPLICATION PUBLICATION
(19) INDIA
(22) Date of filing of Application :09/04/2012
(21) Application No.3187/CHENP/2012 A
(43) Publication Date : 05/07/2013

(54) Title of the invention : CONTROL DEVICE

(51) International classification :F24F11/02
(31) Priority Document No :2009-223486
(32) Priority Date :28/09/2009
(33) Name of priority country :Japan
(86) International Application No :PCT/JP2010/066239
Filing Date :17/09/2010
(87) International Publication No :WO 2011/037095 A1
(61) Patent of Addition to Application Number :NA
Filing Date :NA
(62) Divisional to Application Number :NA
Filing Date :NA

(71)**Name of Applicant :**
1)DAIKIN INDUSTRIES, LTD.
Address of Applicant :UMEDA CENTER BUILDING, 4-12, NAKAZAKI-NISHI, 2-CHOME, KITA-KU, OSAKA-SHI, OSAKA, 5308323 Japan
(72)**Name of Inventor :**
1)KUMAMOTO, GEN
2)HASHIMOTO, SATOSHI

(57) Abstract :
Disclosed is a control device which controls the swing action of an air conditioner to improve room amenity. Specifically disclosed is a control device (4) which controls the swing action to vertically swing flaps (22a to 22d) of an air conditioner (1), and which is provided with an operation mode determination unit (41a), a swing pattern storage area (42), and a control command generating unit (41e). The operation mode determination unit (41a) at least determines a cooling operation mode and a heating operation mode, which are the operation mode of the air conditioner (1). The swing pattern storage area (42) stores a plurality of swing patterns which are information associated with the swing action. The control command generating unit (41e) generates a control command of the air conditioner (1) on the basis of a swing pattern in accordance with the result determined by the operation mode determination unit (41a) among the plurality of swing patterns.

No. of Pages : 182 No. of Claims : 25

(12) PATENT APPLICATION PUBLICATION
(21) Application No.3189/CHENP/2012 A
(19) INDIA
(22) Date of filing of Application :09/04/2012
(43) Publication Date : 05/07/2013

(54) Title of the invention : QUALITY OF SERVICE (QOS) BASED SYSTEM, NETWORKS, AND ADVISORS

(51) International classification :H04L12/28,H04L12/56
(31) Priority Document No :12/606,882
(32) Priority Date :27/10/2009
(33) Name of priority country :U.S.A.
(86) International Application No :PCT/US2010/052313
Filing Date :12/10/2010
(87) International Publication No :WO 2011/056364 A3
(61) Patent of Addition to Application Number :NA
Filing Date :NA
(62) Divisional to Application Number :NA
Filing Date :NA

(71)**Name of Applicant :**
1)MICROSOFT CORPORATION
Address of Applicant :ONE MICROSOFT WAY, REDMOND, WASHINGTON 98052-6399 U.S.A.
(72)**Name of Inventor :**
1)LI, JIN
2)HUANG, CHENG
3)WANG, YE
4)YANG, RICHARD R.

(57) Abstract :
Techniques and technologies for routing communications based on Quality of Service (QOS) related information. More particularly, this document discloses techniques and technologies for selecting communications paths which partially overlap other communication paths for which QOS related information has been measured. The techniques and technologies include determining, performance levels for path segments within the communication paths from the measured QOS information.

No. of Pages : 36 No. of Claims : 15

(12) PATENT APPLICATION PUBLICATION
(19) INDIA
(22) Date of filing of Application :12/04/2012
(21) Application No.3300/CHENP/2012 A
(43) Publication Date : 05/07/2013

(54) Title of the invention : LITHIUM SECONDARY BATTERY, AND NON-AQUEOUS ELECTROLYTIC SOLUTION FOR USE IN THE LITHIUM SECONDARY BATTERY

(51) International classification :H01M10/0567,H01M10/0525,H01M4/505
(31) Priority Document No :2009-237416
(32) Priority Date :14/10/2009
(33) Name of priority country :Japan
(86) International Application No :PCT/JP2010/067804
Filing Date :09/10/2010
(87) International Publication No :WO 2011/046092 A1
(61) Patent of Addition to Application Number :NA
Filing Date :NA
(62) Divisional to Application Number :NA
Filing Date :NA

(71)**Name of Applicant :**
1)UBE INDUSTRIES, LTD
Address of Applicant :1978-96, OAZA KOGUSHI, UBE-SHI, YAMAGUCHI 755-8633 Japan
(72)**Name of Inventor :**
1)ABE, KOJI

(57) Abstract :
Disclosed are : a lithium secondary battery comprising a positive electrode containing, as the positive electrode active material, a lithium-containing metal oxide that contains at least one metal element selected from nickel, manganese and iron, a negative electrode containing, as the negative electrode active material, a carbon material capable of absorbing and releasing lithium, and a nonaqueous electrolytic solution of an electrolyte salt dissolved in a nonaqueous solvent, wherein the nonaqueous electrolytic solution contains from 0.1 to 5% by mass of 1,2,3,4-tetrahydronaphthalene, and from 0.1 to 5% by mass of a biphenyl derivative and/or an alkylphenol derivative; and a non-aqeous electrolytic solution for use in the lithium secondary battery.The lithium secondary battery can have an excellent post-low-temperature-cycle recovery rate even after the battery is exposed to a high-temperature environment

No. of Pages : 51 No. of Claims : 10

(12) PATENT APPLICATION PUBLICATION
(21) Application No.14/CHE/2012 A
(19) INDIA
(22) Date of filing of Application :02/01/2012
(43) Publication Date : 05/07/2013

(54) Title of the invention : ELECTRIC OUTBOARD DRIVE

(51) International classification :B63H
(31) Priority Document No :NA
(32) Priority Date :NA
(33) Name of priority country :NA
(86) International Application No :NA
Filing Date :NA
(87) International Publication No : NA
(61) Patent of Addition to Application Number :NA
Filing Date :NA
(62) Divisional to Application Number :NA
Filing Date :NA

(71)**Name of Applicant :**
1)SOLAS SCIENCE & ENGINEERING CO., LTD.
Address of Applicant :NO. 37, 35TH ROAD, TAICHUNG INDUSTRIAL PARK, TAICHUNG CITY 408 Taiwan
(72)**Name of Inventor :**
1)LIN, YEUN-JUNN

(57) Abstract :
An electric outboard drive adapted to be mounted on a transom of a boat through a mounting bracket includes a driving device and a propelling device. Through engagement of a first transmission shaft with a second transmission shaft, the power of an electric motor of the driving device is transmitted to a propeller of the propelling device. As a result, when the electric motor drives the first transmission shaft to rotate, the propeller is rotated by the transmission of the second transmission shaft to propel the boat.

No. of Pages : 18 No. of Claims : 7

(12) PATENT APPLICATION PUBLICATION
(19) INDIA
(22) Date of filing of Application :03/04/2012
(21) Application No.3032/CHENP/2012 A
(43) Publication Date : 05/07/2013

(54) Title of the invention : OZONE GENERATOR DEVICE

(51) International classification :A61L2/20
(31) Priority Document No :0915484.0
(32) Priority Date :07/09/2009
(33) Name of priority country :U.K.
(86) International Application No :PCT/GB2010/001693
Filing Date :07/09/2010
(87) International Publication No :WO 2011/027135 A2
(61) Patent of Addition to Application Number :NA
Filing Date :NA
(62) Divisional to Application Number :NA
Filing Date :NA

(71)**Name of Applicant :**
1)STERITROX LIMITED
Address of Applicant :THE OLD STABLES, UPPER END, BIRLINGHAM, PERSHORE-WR10 3AA U.K.
(72)**Name of Inventor :**
1)DUNKLEY, PETER
2)SOPER, KENNETH JOHN

(57) Abstract :
An ozone generator cartridge (60) suitable for a sterilization, decontamination and/or sanitation device. The cartridge comprises a sealable housing (60) for providing a corona discharge, the housing containing at least one power supply unit (64) and at least one inlet (65) for connection to an oxygen or air supply, the cartridge including at least part of at least one ozone conversion cell (63) attached to and extending from an external surface of a wall of the sealed housing, the conversion cell extending into a delivery conduit (52) of a decontamination device that leads to at least one discharge outlet (16).

No. of Pages : 29 No. of Claims : 17

(12) PATENT APPLICATION PUBLICATION
(19) INDIA
(22) Date of filing of Application :11/04/2012
(21) Application No.3264/CHENP/2012 A
(43) Publication Date : 05/07/2013

(54) Title of the invention : NON-WOVEN MAT AND POLLUTION CONTROL DEVICE WITH THE SAME

(51) International classification :F01N3/28
(31) Priority Document No :61/250,937
(32) Priority Date :13/10/2009
(33) Name of priority country :U.S.A.
(86) International Application No :PCT/US2010/052438
Filing Date :13/10/2010
(87) International Publication No :WO 2011/047001 A1
(61) Patent of Addition to Application Number :NA
Filing Date :NA
(62) Divisional to Application Number :NA
Filing Date :NA

(71)**Name of Applicant :**
1)3M INNOVATIVE PROPERTIES COMPANY
Address of Applicant :3M CENTER, POST OFFICE BOX 33427 SAINT PAUL, MINNESOTA 55133-3427 U.S.A.
(72)**Name of Inventor :**
1)DE ROVERE, ANNE, N.
2)SACHS, KIM, C.

(57) Abstract :
Non-woven layer having a first and second, generally opposed major surfaces, a length with first and second, generally opposed edges, wherein the non-woven layer comprising inorganic fibers and having a binder content not greater than 7 percent by weight, based on the total weight of the non-woven layer, wherein there is at least one line of stitching. The non-woven layer is useful, for example, for mounting mats for pollution control devices.

No. of Pages : 21 No. of Claims : 15

(12) PATENT APPLICATION PUBLICATION
(19) INDIA
(22) Date of filing of Application :11/04/2012
(21) Application No.3265/CHENP/2012 A
(43) Publication Date : 05/07/2013

(54) Title of the invention : PELLETS COATED WITH COATINGS CONTAINING ACTIVE SUBSTANCES

(51) International classification	:C08F220/00, A61K47/00,A61K9/00
(31) Priority Document No	:09170553.3
(32) Priority Date	:17/09/2009
(33) Name of priority country	:EPO
(86) International Application No	:PCT/EP2010/063393
Filing Date	:13/09/2010
(87) International Publication No	:WO 2011/032916 A1
(61) Patent of Addition to Application Number	:NA
Filing Date	:NA
(62) Divisional to Application Number	:NA
Filing Date	:NA

(71)**Name of Applicant :**
1)BASF SE
Address of Applicant :67056, LUDWIGSHAFEN Germany
(72)**Name of Inventor :**
1)KOLTER, KARL
2)DJURIC, DEJAN
3)FISCHER, STEFAN
4)KARL, MATTHIAS

(57) Abstract :
Formulations of sparingly water-soluble active ingredients, consisting of carrier particles provided with active ingredient-containing coatings, the sparingly soluble active ingredients being embedded in coatings composed of amphiphilic copolymers.

No. of Pages : 23 No. of Claims : 16

(12) PATENT APPLICATION PUBLICATION
(19) INDIA
(22) Date of filing of Application :11/04/2012
(21) Application No.3267/CHENP/2012 A
(43) Publication Date : 05/07/2013

(54) Title of the invention : METHOD, SYSTEM AND CLIENT FOR DOWNING SOFTWARE INSTALLATION PACKAGE

(51) International classification :G06F9/445
(31) Priority Document No :201010042809.2
(32) Priority Date :15/01/2010
(33) Name of priority country :China
(86) International Application No :PCT/CN2010/079884
Filing Date :16/12/2010
(87) International Publication No :WO 2011/085625 A1
(61) Patent of Addition to Application Number :NA
Filing Date :NA
(62) Divisional to Application Number :NA
Filing Date :NA

(71)**Name of Applicant :**
1)TENCENT TECHNOLOGY (SHENZHEN) COMPANY LIMITED
Address of Applicant :ROOM 403, EAST BLOCK 2, SEG PARK ZHENXING ROAD, FUTIAN DISTRICT, SHENZHEN CITY 518044, GUANGDONG PROCINCE, PRC China
(72)**Name of Inventor :**
1)BAI, NING

(57) Abstract :
Embodiments of the invention provide a method, system and client for downloading a software installation package, so as to implement downloading and installation of a software installation package, which doesnt need to search in a network for downloading address of the software installation package. The method includes: obtaining, by a client, software installation package list information from a software storage server; selecting, by the client, at least one software installation package necessary to be downloaded, from the software installation package list information; selecting, by the client, at least one of the software storage server and another client, which has downloaded a selected software installation package, as a downloading destination source, and sending a request to the downloading destination source to download the selected software installation package.

No. of Pages : 30 No. of Claims : 16

(12) PATENT APPLICATION PUBLICATION
(19) INDIA
(22) Date of filing of Application :02/01/2012
(21) Application No.9/CHE/2012 A
(43) Publication Date : 05/07/2013

(54) Title of the invention : Dissolution test apparatus for testing transmucosal drug delivery systems

(51) International classification :A61J
(31) Priority Document No :NA
(32) Priority Date :NA
(33) Name of priority country :NA
(86) International Application No :NA
Filing Date :NA
(87) International Publication No : NA
(61) Patent of Addition to Application Number :NA
Filing Date :NA
(62) Divisional to Application Number :NA
Filing Date :NA

(71)**Name of Applicant :**
1)INDURU JAGADEESH
Address of Applicant :H. No: 3-3-13 P. No. 16 F. No. G-1 Sai Residency Baghameer Kukatpally Hyderabad-500 072 India India
(72)**Name of Inventor :**
1)INDURU JAGADEESH

(57) Abstract :
The dissolution test apparatus for drug release/diffusion studies of transmucosal delivery systems mentioned in this invention comprise of medium feeder(s) internal vessel(s) external vessel(s) turbulence creator(s) and sample holder to accommodate various types (solid liquid semisolid or gaseous state) of dosage forms. The dissolution testing apparatus of present invention functions with concentration gradient and without use of electricity or battery for stirring agitation or pumping of medium. It can be used to test the wide variety of dosage forms include tablets capsules granules powders emulsions suspensions gels ointments pastes films sprays aerosols and solutions.

No. of Pages : 39 No. of Claims : 13

(12) PATENT APPLICATION PUBLICATION
(21) Application No.3311/CHENP/2012 A
(19) INDIA
(22) Date of filing of Application :12/04/2012
(43) Publication Date : 05/07/2013

(54) Title of the invention : METHOD AND APPARATUS FOR TRIMMING DIE-TO-DIE VARIATION OF AN ON-CHIP GENERATED VOLTAGE REFERENCE

(51) International classification :G11C5/14
(31) Priority Document No :12/577,502
(32) Priority Date :12/10/2009
(33) Name of priority country :U.S.A.
(86) International Application No :PCT/US2010/048892
Filing Date :15/09/2010
(87) International Publication No :WO 2011/046702 A1
(61) Patent of Addition to Application Number :NA
Filing Date :NA
(62) Divisional to Application Number :NA
Filing Date :NA

(71)**Name of Applicant :**
1)XILINX, INC
Address of Applicant :2100 LOGIC DRIVE, SAN JOSE, CA 95124 U.S.A.
(72)**Name of Inventor :**
1)NGUYEN, LEON, L
2)VOOGEL, MARTIN, L

(57) Abstract :
Method and apparatus is provided for the implementation of a measurement and adjustment mechanism within a semiconductor die that facilities adjustment of the magnitude of voltage generated by one or more voltage reference generation circuits on the die. In a first embodiment, the output voltage magnitude of a bandgap reference reference circuit (202, 204) may be measured and adjusted. In a second embodiment, the output voltage magnitude of a voltage regulator circuit may be measured and adjusted. Programmable circuit elements, such as programmable resistors, may first be programmed during a configuration event of the die to determine the optimal configuration settings of the one or more voltage reference generation circuits. The optimal configuration settings are then used to program the state of one or more efuses (222, 224, 226, 228) to maintain the optimal configuration settings for the duration of semiconductor dies lifetime.

No. of Pages : 31 No. of Claims : 15

(12) PATENT APPLICATION PUBLICATION
(19) INDIA
(22) Date of filing of Application :02/01/2012
(21) Application No.4/CHE/2012 A
(43) Publication Date : 05/07/2013

(54) Title of the invention : GASTRO RETENTIVE DRUG DELIVERY SYSTEM OF CALCIUM SUPPLEMENTS

(51) International classification	:A61K 9/00
(31) Priority Document No	:NA
(32) Priority Date	:NA
(33) Name of priority country	:NA
(86) International Application No	:NA
Filing Date	:NA
(87) International Publication No	: NA
(61) Patent of Addition to Application Number	:NA
Filing Date	:NA
(62) Divisional to Application Number	:NA
Filing Date	:NA

(71)**Name of Applicant :**
1)MEDREICH LIMITED
Address of Applicant :MEDREICH HOUSE, NO.12/8, SARASWATI AMMAL STREET, M.S. NAGAR, BANGALORE 560 033 Karnataka India
(72)**Name of Inventor :**
1)BOTHRA CHANDANMAL PUKHRAJ
2)SHRINIVASAN SHESHA IYENGAR
3)DR. KANDARAPU RAGHUPATHI
4)SAMBASIVA RAO MARAM

(57) Abstract :
The present invention relates to gastro retentive dosage form of calcium and its salts and also process for preparing it.

No. of Pages : 14 No. of Claims : 10

(12) PATENT APPLICATION PUBLICATION
(19) INDIA
(22) Date of filing of Application :29/12/2011

(21) Application No.4652/CHE/2011 A
(43) Publication Date : 05/07/2013

(54) Title of the invention : Normalized Search

(51) International classification :G06F
(31) Priority Document No :NA
(32) Priority Date :NA
(33) Name of priority country :NA
(86) International Application No :NA
Filing Date :NA
(87) International Publication No : NA
(61) Patent of Addition to Application Number :NA
Filing Date :NA
(62) Divisional to Application Number :NA
Filing Date :NA

(71)**Name of Applicant :**
1)Business Objects Software Limited.
Address of Applicant :25/28 Northwall Quay Dublin 1 Ireland. Ireland
(72)**Name of Inventor :**
1)Suresh Pasumarthi
2)Som Ranjan Satpathy
3)Ganesh Vaitheeswaran

(57) Abstract :
Systems and methods of searching by a processor are described herein. In accordance with one aspect of the present disclosurc a master index having a plurality of index documents corresponding to artifacts stored in a repositOlY is generated. An index document maps contents 11om a source artifact to index categories having different default boost values indicating relative importanee of the index categories. A search query is fired by a user to seareh the master index. A result list of artifacts having contents matching (hit) the search query is generated. Artifacts are ranked in the list based on hit scores according to number of hits which categories the hits occurred and the default boost values of the index eategories.

No. of Pages : 88 No. of Claims : 20

(12) PATENT APPLICATION PUBLICATION
(21) Application No.3004/CHENP/2012 A
(19) INDIA
(22) Date of filing of Application :02/04/2012
(43) Publication Date : 05/07/2013

(54) Title of the invention : INFORMATION TERMINAL, DISPLAY METHOD, AND PROGRAM

(51) International classification :G06F3/048,G06F9/48
(31) Priority Document No :2009-230461
(32) Priority Date :02/10/2009
(33) Name of priority country :Japan
(86) International Application No :PCT/JP2010/005362
Filing Date :31/08/2010
(87) International Publication No :WO 2011/039940 A1
(61) Patent of Addition to Application Number :NA
Filing Date :NA
(62) Divisional to Application Number :NA
Filing Date :NA

(71)**Name of Applicant :**
1)NEC CORPORATION
Address of Applicant :7-1, SHIBA 5-CHOME, MINATO-KU, TOKYO 108-8001 Japan
(72)**Name of Inventor :**
1)TANAKA, HIDEAKI

(57) Abstract :
The present invention aims to provide an information terminal, a display method, and a program that can share information of applications operating in multi-task by simple operations. An information terminal according to the present invention can execute first and second applications at the same time, and includes a display control unit 40 that generates screen data in which between first and second display windows regarding the first and second applications, the display window regarding the application to be operated by the user is preferentially displayed in front, a display device 50 that performs image display according to the screen data, and an input device 60 that accepts operations, in which the display control unit 40 obtains attribute information of the second application and passes it to the first application in response to an operation to the input device 50 by the user when the first application is an object to be operated without switching the object to be operated to the second application.

No. of Pages : 38 No. of Claims : 9

(12) PATENT APPLICATION PUBLICATION
(19) INDIA
(22) Date of filing of Application :04/04/2012
(21) Application No.3104/CHENP/2012 A
(43) Publication Date : 05/07/2013

(54) Title of the invention : PIXEL CIRCUIT AND DISPLAY DEVICE

(51) International classification	:G09G3/36,G02F 1/1368,G09F 9/30
(31) Priority Document No	:2009-206475
(32) Priority Date	:07/09/2009
(33) Name of priority country	:Japan
(86) International Application No	:PCT/JP2010/058742
Filing Date	:24/05/2010
(87) International Publication No	:WO 2011/027598 A1
(61) Patent of Addition to Application Number	:NA
Filing Date	:NA
(62) Divisional to Application Number	:NA
Filing Date	:NA

(71)**Name of Applicant :**
1)SHARP KABUSHIKI KAISHA
Address of Applicant :22-22, NAGAIKE-CHO, ABENO-KU, OSAKA-SHI, OSAKA 545-8522 Japan
(72)**Name of Inventor :**
1)YAMAUCHI, YOSHIMITSU

(57) Abstract :
A display device which achieves low power consumption without causing an aperture ratio to be lowered is provided. A pixel circuit (2) includes an internal node (Nl) which holds a voltage of the pixel data supplied to a display element part (21); a first switch circuit (22) which transfers the voltage of the pixel data supplied from a data signal line (SL) to the internal node (Nl) through at least a switch element (T4), a second switch circuit (23) which transfers a voltage supplied to a predetermined voltage supply line (VSL) to the internal node (Nl) without going through the switch element (T4); and a control circuit (24) which holds a predetermined voltage depending on the voltage of the pixel data held in the internal node (Nl), at one end of a first capacitance element (C1) and controls connection/disconnection of the second switch circuit (23).

No. of Pages : 140 No. of Claims : 29

(12) PATENT APPLICATION PUBLICATION
(19) INDIA
(22) Date of filing of Application :04/04/2012
(21) Application No.3107/CHENP/2012 A
(43) Publication Date : 05/07/2013

(54) Title of the invention : HIGH AFFINITY HUMAN ANTIBODIES TO HUMAN PROTEASE-ACTIVAED RECEPTOR-2

(51) International classification :C07K16/28,A61P 29/00
(31) Priority Document No :61/240,783
(32) Priority Date :09/09/2009
(33) Name of priority country :U.S.A.
(86) International Application No :PCT/US2010/048034
Filing Date :08/09/2010
(87) International Publication No :WO 2011/031695 A1
(61) Patent of Addition to Application Number :NA
Filing Date :NA
(62) Divisional to Application Number :NA
Filing Date :NA

(71)**Name of Applicant :**
1)REGENERON PHARMACEUTICALS, INC.
Address of Applicant :777 OLD SAW MILL RIVER ROAD, TARRYTOWN, NY 10591 U.S.A.
(72)**Name of Inventor :**
1)MACDONALD, LYNN
2)MURPHY, ANDREW, J.
3)PAPADOPULOS, NICHOLAS, J.
4)MORRA, MARC, R.
5)SALZLER, ROBERT, R.
6)LACCROIX-FRALISH, MICHAEL, L.

(57) Abstract :
The present invention provides antibodies that bind to protease-activated receptor-2 (PAR-2) and methods of using same. According to certain embodiments of the invention, the antibodies are fully human antibodies that bind to human PAR-2. The antibodies of the invention are useful, inter alia, for the treatment of diseases and disorders associated with one or more PAR-2 biological activities, including the treatment of pain conditions, inflammatory conditions and gastrointestinal conditions.

No. of Pages : 315 No. of Claims : 16

(12) PATENT APPLICATION PUBLICATION
(19) INDIA
(22) Date of filing of Application :12/04/2012
(21) Application No.3306/CHENP/2012 A
(43) Publication Date : 05/07/2013

(54) Title of the invention : A PROCESS FOR DRY-GRINDING A POLYSACCHARIDE DERIVATIVE

(51) International classification :C08J3/12
(31) Priority Document No :61/251,488
(32) Priority Date :14/10/2009
(33) Name of priority country :U.S.A.
(86) International Application No :PCT/US2010/047199
Filing Date :31/08/2010
(87) International Publication No :WO 2011/046679 A1
(61) Patent of Addition to Application Number :NA
Filing Date :NA
(62) Divisional to Application Number :NA
Filing Date :NA

(71)**Name of Applicant :**
1)DOW GLOBAL TECHNOLOGIES LLC
Address of Applicant :2040 DOW CENTER, MIDLAND, MICHIGAN 48674 U.S.A.
(72)**Name of Inventor :**
1)GOERLACH-DOHT, YVONNE
2)HERMANNS, JUERGEN

(57) Abstract :
In a process for producing a particulate polysaccharide derivative by dry-grinding a moist polysaccharide derivative the median length of the particles after dry-grinding is controlled by controlling the moisture content of the polysaccharide derivative prior to dry-grinding. Advantageously the median length of the particles after dry-grinding is adjusted to a first value by a first moisture content of the polysaccharide derivative prior to dry-grinding and is adjusted to a second value by a second moisture content.

No. of Pages : 19 No. of Claims : 10

(12) PATENT APPLICATION PUBLICATION
(19) INDIA
(22) Date of filing of Application :12/04/2012
(21) Application No.3307/CHENP/2012 A
(43) Publication Date : 05/07/2013

(54) Title of the invention : COMBINATIONS OF A PI3K INHIBITOR AND A MEK INHIBITOR

(51) International classification	:A61K31/445,A61K31/5377A61K35/00,
(31) Priority Document No	:61/250,852
(32) Priority Date	:12/10/2009
(33) Name of priority country	:U.S.A.
(86) International Application No	:PCT/EP2010/065149
Filing Date	:11/10/2010
(87) International Publication No	:WO 2011/054620 A1
(61) Patent of Addition to Application Number	:NA
Filing Date	:NA
(62) Divisional to Application Number	:NA
Filing Date	:NA

(71)**Name of Applicant :**
1)F. HOFFMANN-LA ROCHE AG
Address of Applicant :124 GRENZACHERSTRASSE, CH-4070 BASEL Swaziland
(72)**Name of Inventor :**
1)BEL VIN, MARCIA
2)CHAN, IRIS T
3)FRIEDMAN, LORI
4)HOEFLICH, KLAUS, P
5)PRESCOTT, JOHN
6)WALLIN, JEFFREY

(57) Abstract :
The invention relates to methods of treating a patient with locally advanced or metastatic solid tumors with a combination of an inhibitor of phosphatidylinositol 3-kinase (PI 3-kinase or PI3K) and an inhibitor of mitogen activated protein kinase kinase (MEK) described herein.

No. of Pages : 108 No. of Claims : 7

(12) PATENT APPLICATION PUBLICATION
(21) Application No.4653/CHE/2011 A
(19) INDIA
(22) Date of filing of Application :29/12/2011
(43) Publication Date : 05/07/2013

(54) Title of the invention : METHOD AND APPARATUS FOR SHARING POINT OF INTEREST INFORMATION AS A WEBLINK

(51) International classification :H04L
(31) Priority Document No :NA
(32) Priority Date :NA
(33) Name of priority country :NA
(86) International Application No :NA
Filing Date :NA
(87) International Publication No : NA
(61) Patent of Addition to Application Number :NA
Filing Date :NA
(62) Divisional to Application Number :NA
Filing Date :NA

(71)**Name of Applicant :**
1)Nokia Corporation
Address of Applicant :Keilalahdentie 4 FIN-02150 Espoo Finland.
(72)**Name of Inventor :**
1)Umesh Chandra
2)Madhavi Latha Padakanti

(57) Abstract :
An approach is provided for facilitating the sharing of information related to an item of interest as a web link via data messaging. The messaging client determines a request to share information related to an item of interest. The messaging client then causes an encoding of the information geo-coded information sharing destinations and user credentials for the sharing destinations into a communication. The messaging client further causes a transmission of the communication to a web server. Next the message platform determines a request to create a web link for sharing information related to an item of interest wherein the request includes a communication encoding the information sharing destinations and user credentials. The message platform then processes and/or facilitates a processing of the request to cause a creation of a web link based on the communication. The message platform further determines to make the web link available to the sharing destinations.

No. of Pages : 56 No. of Claims : 38

(12) PATENT APPLICATION PUBLICATION
(19) INDIA
(22) Date of filing of Application :30/12/2011
(21) Application No.4654/CHE/2011 A
(43) Publication Date : 05/07/2013

(54) Title of the invention : GRID THE INVERTER

(51) International classification :H02J
(31) Priority Document No :NA
(32) Priority Date :NA
(33) Name of priority country :NA
(86) International Application No :NA
Filing Date :NA
(87) International Publication No : NA
(61) Patent of Addition to Application Number :NA
Filing Date :NA
(62) Divisional to Application Number :NA
Filing Date :NA

(71)**Name of Applicant :**
1)VALAGAM RAJAGOPAL RAGUNATHAN
Address of Applicant :OLD NO.6, NEW NO.72, 12TH AVENUE, ASHOK NAGAR, CHENNAI - 600 083 Tamil Nadu India
(72)**Name of Inventor :**
1)VALAGAM RAJAGOPAL RAGUNATHAN

(57) Abstract :
This invention relates to electric-power generation system from multiple sources like generator windingsl 0,20,30. Excitation to windings is controlled by controller 16,26,36, which generates appropriate switching-pattern based on power available. Generated switching-patterns are applied to H/Hex Bridge inverter 11,21,31, through pre driver, driver 15. Power generated is stored in DG-Bus and pumped to grid through H/Hex Bridge inverter 12,22,32. Appropriate switching-pattern based on grid voltage, frequency is generated by controller 16,26,36. Switching-patterns to H/Hex Bridge inverter 12,22,32 are applied through pre driver, driver 15. Output of H/Hex Bridge inverter 12,22,32 is filtered out by filters 13,23,33 eliminating any harmonics induced by switching devices. Output of filter is connected to 19,29,39,90 Single/Two/Three Phase AC Bus and any Single/Two /Three Phase Grid Load, Pump or any other Single/Two/Three Phase load 14,24,34. Controller 16,26,36, generates switching- patterns to both load side and generator side H/Hex Bridge inverter.

No. of Pages : 16 No. of Claims : 10

(12) PATENT APPLICATION PUBLICATION
(21) Application No.106/KOL/2011 A
(19) INDIA
(22) Date of filing of Application :27/01/2011
(43) Publication Date : 05/07/2013

(54) Title of the invention : A NOVEL METHOD OF ENRICHING PRODUCER GAS CALORIFIC VALUE BY LPG, LNG AND CNG

(51) International classification :B01D29/05
(31) Priority Document No :NA
(32) Priority Date :NA
(33) Name of priority country :NA
(86) International Application No :NA
Filing Date :NA
(87) International Publication No : NA
(61) Patent of Addition to Application Number :NA
Filing Date :NA
(62) Divisional to Application Number :NA
Filing Date :NA

(71)**Name of Applicant :**
1)BHARAT HEAVY ELECTRICALS LIMITED
Address of Applicant :AT REGIONAL OPERATIONS DIVISION (ROD), PLOT NO 9/1, DJBLOCK 3RD FLOOR, KARUNAMOYEE, SALT LAKE CITY, KOLKATA-700091, HAVING ITS REGISTERED OFFICE AT BHEL HOUSE, SIRI FORT, NEW DELHI-110049, INDIA
(72)**Name of Inventor :**
1)SWAMINATHAN RAMAKRISHNAN
2)AUGUSTINE ANDREW
3)MANOHARAN RAVISHANKAR
4)SRINIVASAN ARAMUDHAN
5)RAJENDRAN AMABLAVANAN

(57) Abstract :
The invention relates to a system for supplementing a low-calorific fuel with a high calorific fuel in a furnace, the furnace operating with the lowcalorific fuel producer gas (PG), and is occasionally supplemented with the high calorific fuel (LPG) when the residual PGis inadequate to complete a heat treatment cycle, the sys tern comprising: a gas train device connected at a first end to a LPG supply source, a second end of the device being attached to a venturi apparatus for supplying regulated quantity of LPGto burners of the furnace when deficit of PGin the furnace is determined; and a venturi apparatus operably connected to the burners of the furnace for supply of regulated quantity of LPG, wherein determination of the inlet and outlet of the venturi apparatus including differential pressure of the PG/LPGis based on calorific value, specific gravity, and density of PG, LPG, and mixed gas including total replenishment quantity of PG and the mixed gas, and wherein venturi sizing is determined based on desired suction, velocity pressure, static pressure, diameter, and total pressure at -several locations of the apparatus including density of the LPG observed at different stages.

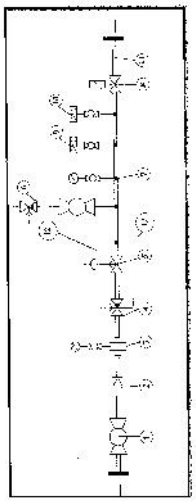

No. of Pages : 15 No. of Claims : 2

(12) PATENT APPLICATION PUBLICATION
(19) INDIA
(22) Date of filing of Application :14/01/2013

(21) Application No.106/KOLNP/2013 A
(43) Publication Date : 05/07/2013

(54) Title of the invention : ACCELERATOR PEDAL DEPRESSION FORCE SETTING METHOD FOR ACCELERATOR PEDAL DEPRESSION FORCE CONTROL DEVICE

(51) International classification :B60K26/04,F02D11/04,F02D11/10
(31) Priority Document No :2010-135653
(32) Priority Date :15/06/2010
(33) Name of priority country :Japan
(86) International Application No :PCT/JP2011/060594
Filing Date :06/05/2011
(87) International Publication No :WO 2011/158571
(61) Patent of Addition to Application Number :NA
Filing Date :NA
(62) Divisional to Application Number :NA
Filing Date :NA

(71)**Name of Applicant :**
1)NISSAN MOTOR CO., LTD.
Address of Applicant :2, Takara-cho, Kanagawa-ku Yokohama-shi, Kanagawa 221-0023, Japan
(72)**Name of Inventor :**
1)SAKAGUCHI Shigeyuki
2)SHIOMI Masao
3)KAWADE Hisashi
4)TOUHACHI Hiromutsu
5)OMORI Masahiro

(57) Abstract :
When an accelerator opening degree exceeds a predetermined accelerator opening degree threshold value, a depression force for an accelerator pedal (2) is increased over a base depressing force by a predetermined amount. During this depression force increasing process, there is performed overshoot control such that a depression force command value is temporarily made larger than a depression force increase target command value (A) according to which the depression force for an accelerator pedal (2) is increased over the base depression force by a predetermined value, and that subsequently, the depression force command value is returned to the depression force increase target command value (A). As regards this overshoot control, there is set an overshoot holding time during which an overshoot amount (B) or the depression force increase command value is held at a value larger than the depression force increase target command value (A), on the basis of the magnitude of the hysteresis of the base depression force of the accelerator pedal (2), said overshoot amount (B) being an overshoot amount in a depression force increase command regarding the depression force increase target command value (A). On the basis of the above, it is possible to prevent impairment of the operability of the accelerator pedal (2) while improving the responsiveness of the depression force at the time when the depression force of the accelerator pedal (2) is increased over the base depression force.

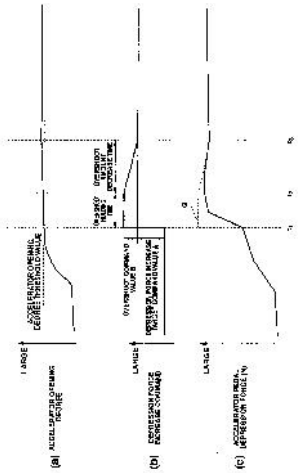

No. of Pages : 30 No. of Claims : 11

(12) PATENT APPLICATION PUBLICATION
(19) INDIA
(22) Date of filing of Application :28/10/2010
(21) Application No.1199/KOL/2010 A
(43) Publication Date : 05/07/2013

(54) Title of the invention : STIFFENED PLATE PANEL OF ALUMINUM ALLOY INVOLVING FRICTION STIR WELDING

(51) International classification :B22D11/12
(31) Priority Document No :NA
(32) Priority Date :NA
(33) Name of priority country :NA
(86) International Application No :NA
Filing Date :NA
(87) International Publication No : NA
(61) Patent of Addition to Application Number :NA
Filing Date :NA
(62) Divisional to Application Number :NA
Filing Date :NA

(71)**Name of Applicant :**
1)INDIAN INSTITUTE OF TECHNOLOGY, KHARAGPUR
Address of Applicant :SPONSORED RESEARCH & INDUSTRIAL CONSULTANCY, INDIA INSTITUTE OF TECHNOLOGY, KHARAGPUR-721302, WEST BENGAL, INDIA.
(72)**Name of Inventor :**
1)MANDAL, NISITH RANJAN
2)BISWAS, PANKAJ

(57) Abstract :
System and method of Friction Stir welding (FSW) of stiffened plate panel using aluminium alloy is disclosed. More particularly, FSW tool with selective design for fabrication of stiffened plate panel using FSW is disclosed wherein AA5083 bare plates and AA6061 stiffeners used to produce butt and fillet joints for producing T- sections. The design configuration of the FSW tool and its geometry favour carrying out required butt and fillet welds to fabricate stiffened plate panels of any customized configuration to suit the requirement in industry and more specifically in ship building industry. Tool geometry with threaded pin and profiled projection on concave face of shoulder region of collar as well as the process parameters standardized through trials for desired strength, hardness, load bearing characteristic, achieving near distortion free stiffened panel with reduced residual stress, improved static strength and ductility, improved fatigue strength, improved surface condition, enhanced tool life, avoiding post-weld processing and favoring reduced manufacturing costs.

No. of Pages : 34 No. of Claims : 11

(12) PATENT APPLICATION PUBLICATION
(19) INDIA
(22) Date of filing of Application :14/01/2013
(21) Application No.109/KOLNP/2013 A
(43) Publication Date : 05/07/2013

(54) Title of the invention : METHOD AND SYSTEM FOR REDUCING INDUSTRIAL EMISSIONS

(51) International classification :B01D53/62,B01D53/14
(31) Priority Document No :2010903173
(32) Priority Date :16/07/2010
(33) Name of priority country :Australia
(86) International Application No :PCT/AU2011/000892
Filing Date :15/07/2011
(87) International Publication No :WO 2012/006678
(61) Patent of Addition to Application Number :NA
Filing Date :NA
(62) Divisional to Application Number :NA
Filing Date :NA

(71)**Name of Applicant :**
1)REDEEM CCS PTY LTD.
Address of Applicant :3303, 368 St Kilda Road, Melbourne, VIC 3004, Australia
(72)**Name of Inventor :**
1)HOOPER, Barry Neil

(57) Abstract :
The invention relates to a method adapted for integration with a carbonate absorption/stripping process for removal of carbon dioxide, the method and system including the steps of: converting a source of alkali from a first industry to a non-carbonate alkali; feeding the non-carbonate alkali as makeup to a carbonate absorption system for stripping carbon dioxide from emissions from a second industry; recovering an output from the system for stripping carbon dioxide, and in the process of conversion of the alkali from the first industry, utilising energy from the second industry.

No. of Pages : 36 No. of Claims : 13

(12) PATENT APPLICATION PUBLICATION
(21) Application No.123/KOLNP/2013 A
(19) INDIA
(22) Date of filing of Application :14/01/2013
(43) Publication Date : 05/07/2013

(54) Title of the invention : PHOTOVOLTAIC SOLAR CELL AND METHOD FOR PRODUCING A PHOTOVOLTAIC SOLAR CELL

(51) International classification :H01L31/0224
(31) Priority Document No :102010026960.3
(32) Priority Date :12/07/2010
(33) Name of priority country :Germany
(86) International Application No :PCT/EP2011/003451
Filing Date :11/07/2011
(87) International Publication No :WO 2012/007143
(61) Patent of Addition to Application Number :NA
Filing Date :NA
(62) Divisional to Application Number :NA
Filing Date :NA

(71)**Name of Applicant :**
1)FRAUNHOFER-GESELLSCHAFT ZUR FÖRDERUNG DER ANGEWANDTEN FORSCHUNG E.V.
Address of Applicant :Hansastr. 27c, 80686 Muenchen, Germany
(72)**Name of Inventor :**
1)THAIDIGSMANN, Benjamin
2)CLEMENT, Florian
3)BIRO, Daniel
4)WOLF, Andreas
5)PREU, Ralf

(57) Abstract :
The invention relates to a method for producing a photovoltaic solar cell having a front side designed for coupling in light, comprising the following method steps: A Producing a plurality of cutouts in a semiconductor substrate of a base doping type, B Producing one or more emitter regions of an emitter doping type at least at the front side of the semiconductor substrate, wherein the emitter doping type is opposite to the base doping type, C Applying an electrically insulating insulation layer and D Producing metallic feed through structures in the cutouts, at least one metallic base contact structure at the rear side of the solar cell, which is formed in an electrically conductive manner with the semiconductor substrate in a base doping region, at least one metallic front-side contact structure at the front side of the solar cell, which is formed in an electrically conductive manner with the emitter region at the front side of the semiconductor substrate, and at least one rear-side contact structure at the rear side of the solar cell, which is formed in a manner electrically conductively connected to the feed through contact structure. The invention is characterized in that in method step B and/or a further method step in addition a feed through emitter region of the emitter doping type extending from the front side to the rear side is formed in each case in the semiconductor substrate on the walls of the cutouts, in that in method step C the insulation layer is applied in a manner covering the rear side of the semiconductor substrate, if appropriate further intervening intermediate layers, in that in method step D the rear side contact structure is applied to the insulation layer, if appropriate to further intermediate layers, in such a way that the rear-side contact structure extends to regions of the semiconductor substrate having base doping and, in these regions, on account of the intervening insulation layer, an electrical insulation is formed between rear-side contact structure and semiconductor substrate, and the base contact structure is applied to the insulation layer, if appropriate to further intermediate layers, in such a way that the base contact structure penetrates through the insulation layer at least in regions, such that an electrically conductive connection is produced between base contact structure and semiconductor substrate. The invention furthermore relates to a photovoltaic solar cell.

No. of Pages : 37 No. of Claims : 16

(12) PATENT APPLICATION PUBLICATION
(19) INDIA
(22) Date of filing of Application :16/01/2013
(21) Application No.139/KOLNP/2013 A
(43) Publication Date : 05/07/2013

(54) Title of the invention : AIRTIGHTNESS INSPECTION METHOD AND AIRTIGHTNESS INSPECTION APPARATUS FOR SEALED BATTERY

(51) International classification :G01M3/32,G01M3/38,H01M10/48
(31) Priority Document No :2010-138499
(32) Priority Date :17/06/2010
(33) Name of priority country :Japan
(86) International Application No :PCT/JP2011/063733
Filing Date :15/06/2011
(87) International Publication No :WO 2011/158878
(61) Patent of Addition to Application Number :NA
Filing Date :NA
(62) Divisional to Application Number :NA
Filing Date :NA

(71)**Name of Applicant :**
1)NISSAN MOTOR CO., LTD.
Address of Applicant :2, Takara-cho, Kanagawa-ku Yokohama-shi, Kanagawa 221-0023, Japan
2)NIPPON MECHATECHNO LTD.
3)Automotive Energy Supply Corporation
(72)**Name of Inventor :**
1)YASOOKA Takeshi
2)KAMIYA Toshihiko
3)TAMURA Itaru
4)SUZUKA Akira
5)NODA Shunji
6)TAKATSUKA Takuya

(57) Abstract :
A soft-packaged sealed battery is placed in a sealed container. The pressure in the sealed container is reduced, and the shape of the undulations on the surface of the sealed battery in the sealed container is imaged using a CCD camera, or the like before and after reducing the pressure. An assessment as to whether the air tightness of the sealed battery is being maintained is made on the basis of changes in the shape of the undulations on the surface that appear as differences in the brightness of the pixels, for example, of the captured image. The impact of fine creases, which cannot be seen by the eye, on the surface of the sealed battery on the assessment is eliminated, and a highly accurate air tightness assessment is achieved by this assessment method.

No. of Pages : 27 No. of Claims : 11

(12) PATENT APPLICATION PUBLICATION
(19) INDIA
(22) Date of filing of Application :24/09/2010
(21) Application No.1080/KOL/2010 A
(43) Publication Date : 05/07/2013

(54) Title of the invention : AN IMPROVED ORIFICE BASED FLOW-MEASURING DEVICE AND A METHOD FOR MEASUREMENT

(51) International classification :F01M1/02
(31) Priority Document No :NA
(32) Priority Date :NA
(33) Name of priority country :NA
(86) International Application No :NA
Filing Date :NA
(87) International Publication No : NA
(61) Patent of Addition to Application Number :NA
Filing Date :NA
(62) Divisional to Application Number :NA
Filing Date :NA

(71)**Name of Applicant :**
1)BHARAT HEAVY ELECTRICALS LIMITED
Address of Applicant :REGIONAL OPERTAIONS DIVISION (ROD), PLOT NO 9/1, DJBLOCK 3RD FLOOR, KARUNAMOYEE, SALT LAKE CITY, KOLKATA - 700091 HAVING ITS REGISTERED OFFICE AT BHEL HOUSE, SIRI FORT, NEW DELHI - 110049, INDIA.
(72)**Name of Inventor :**
1)RAMASWAMY ELANKOVAN
2)KRISHNADASS KARTHICK
3)RAMASWAMY DEHANUSKODI
4)SIVATHANUPILLAI ARUMUGAM
5)VELLASAMY NATARAJAN

(57) Abstract :
The present invention relates to a method of measurement of low-liquid flow passing, through an orifice device in a boiler tube having diameter having diameter below 50 mm or above 1200 mm, the liquid flow maintaining a Reynolds number below 3150, the method comprising the step of locating a pressure sensor-zone for disposing a measuring device, the location in respect of the upstream flow (3) and the downstream flow (2) being determined based on a numerical simulation of the liquid flow below the Reynolds number of 3150, selecting a location of the vena-contracta (5) between within the cross-sectional diameter (D) of the liquid flow, the diameter of the vena-contracta (5) being less than that of the orifice device; and determining a flow-regularization zone in the boiler tube (14) whose cross-sectional diameter being 0.45 to 0.60 times that of the tube, and the length of flow-regularization zone being 7.50 to 8.00 times that of the tube at the downstream (2) of the orifice device (1), and 4.0 to 6.0 times that of the tube at the upstream (3) of the orifice device (1).

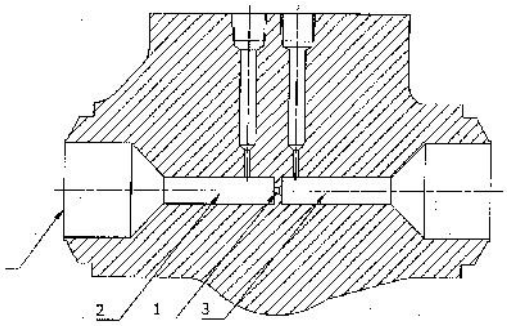

No. of Pages : 9 No. of Claims : 2

(12) PATENT APPLICATION PUBLICATION
(19) INDIA
(22) Date of filing of Application :15/01/2013
(21) Application No.130/KOLNP/2013 A
(43) Publication Date : 05/07/2013

(54) Title of the invention : AN ELECTRIC ACTUATOR

(51) International classification :F16H25/20,F16H25/22,H02K7/06
(31) Priority Document No :2010-144761
(32) Priority Date :25/06/2010
(33) Name of priority country :Japan
(86) International Application No :PCT/JP2011/064518
Filing Date :24/06/2011
(87) International Publication No :WO 2011/162369
(61) Patent of Addition to Application Number :NA
Filing Date :NA
(62) Divisional to Application Number :NA
Filing Date :NA

(71)**Name of Applicant :**
1)NTN CORPORATION
Address of Applicant :3-17, Kyomachibori 1-chome, Nishi-ku, Osaka-shi, Osaka, Japan
(72)**Name of Inventor :**
1)SHIMIZU Tatsunori

(57) Abstract :
[Problem] To provide an electric actuator that has fewer parts, lower costs and improved reliability due to the simplification of the rotation prevention mechanism. [Solution] A ball screw mechanism (8) is formed from a nut (16) that is connected to a speed reduction mechanism (6) and supported by a rolling bearing (18), which is mounted to a housing (2), in a manner such that the nut (16) is capable of rotating but is incapable of moving in the axial direction, and a screw shaft (15) that is inserted into the nut (16) with a plurality of balls therebetween and is coaxially integrated with a drive shaft (7). A cylindrical sac hole that houses the drive shaft (7) is formed in the housing (2a). A sensor cover (13) is detachably fixed to this sac hole; a guide member (14) having a recessed groove (14a) that has a substantially U-shaped cross section and extending along the axial direction towards the drive shaft (7) is mounted to the inner wall of this side cover (13); and the screw shaft (15) is supported in a manner so as to be capable of moving in the axial direction but incapable of rotation relative to the housing (2a) when a rotation prevention pin (9) embedded in the external diameter of the screw shaft (15) engages with the guide member (14).

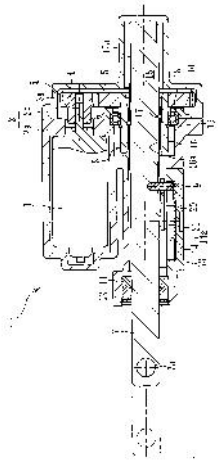

No. of Pages : 28 No. of Claims : 10

(12) PATENT APPLICATION PUBLICATION
(19) INDIA
(22) Date of filing of Application :16/11/2010
(21) Application No.1301/KOL/2010 A
(43) Publication Date : 05/07/2013

(54) Title of the invention : STABLE ORAL PHARMACEUTICAL COMPOSITIONS OF MONTELUKAST

(51) International classification :A61K31/47
(31) Priority Document No :NA
(32) Priority Date :NA
(33) Name of priority country :NA
(86) International Application No :NA
Filing Date :NA
(87) International Publication No : NA
(61) Patent of Addition to Application Number :NA
Filing Date :NA
(62) Divisional to Application Number :NA
Filing Date :NA

(71)**Name of Applicant :**
1)LUPIN LIMITED
Address of Applicant :159 CST ROAD, KALINA, SANTACRUZ (EAST) MUMBAI- 400 098, STATE OF MAHARASHTRA, INDIA AND ALSO HAVING A PLACE OF BUSINESS AT 1/1, SASHI SHEKHAR BOSE ROAD, KOLKATA - 700 025, STATE OF WEST BENGAL, INDIA
(72)**Name of Inventor :**
1)TATIYA, KIRTIKUMAR, ABHAY
2)SAOJI, DILIP, GOPALKRISHNA
3)KULKARNI, CHINTAN, SHARAD

(57) Abstract :
A stable liquid oral pharmaceutical composition comprising montelukast, a vehicle comprising mineral oil, desiccant and optionally pharmaceutically acceptable additives is provided. The invention also relates to kit for dispensing of oral pharmaceutical compositions of Montelukast. The kit comprises montelukast, a vehicle comprising mineral oil, desiccant and optionally pharmaceutically acceptable additives. The kit comprises a first container comprising pharmaceutical composition of montelukast and optionally desiccant, a second container comprising a vehicle comprising mineral oil, optionally desiccant and pharmaceutically acceptable additives, and instructions for use. montelukast and mineral oil occupy pre-measured volume into the respective unit of the kit.

No. of Pages : 15 No. of Claims : 11

(12) PATENT APPLICATION PUBLICATION
(21) Application No.1466/KOL/2012 A
(19) INDIA
(22) Date of filing of Application :27/12/2012
(43) Publication Date : 05/07/2013

(54) Title of the invention : SHORTAGE VOLTAGETRIP DEVICE OF MOLDED CASE CIRCUIT BREAKER

(51) International classification	:G01R35/00
(31) Priority Document No	:10-2011-0146993
(32) Priority Date	:30/12/2011
(33) Name of priority country	:Republic of Korea
(86) International Application No	:NA
Filing Date	:NA
(87) International Publication No	: NA
(61) Patent of Addition to Application Number	:NA
Filing Date	:NA
(62) Divisional to Application Number	:NA
Filing Date	:NA

(71)**Name of Applicant :**
1)LSIS CO., LTD.
Address of Applicant :1026-6 HOGYE-DONG, DONGAN-GU, ANYANG-SI, GYEONGGI-DO, 431-080 REPUBLIC OF KOREA
(72)**Name of Inventor :**
1)HAM, SEUNG JIN

(57) Abstract :
Provided is a shortage voltage trip device of a molded case circuit breaker. In the molded case circuit breaker, driving current applied into a trip driving part is reduced in proportion to reduction of a power applied into a circuit. When the voltage applied into the circuit is greater than a rated voltage, the trip driving part is stopped, and an operation of a trip driving mechanism is restricted by a trip lever. When the voltage applied into the circuit is less than the rated voltage, the trip driving part is operated, and the restriction of the trip driving mechanism is released by the trip lever rotated by being linked with the operation of the trip driving part. Thus, the circuit may be more simply switched, and operation reliability of a product may be improved. Also, the product may have a more simplified structure.

No. of Pages : 55 No. of Claims : 17

(12) PATENT APPLICATION PUBLICATION
(19) INDIA
(22) Date of filing of Application :14/01/2013
(21) Application No.104/KOLNP/2013 A
(43) Publication Date : 05/07/2013

(54) Title of the invention : CARBON COATED LITHIUM TRANSITION METAL PHOSPHATE AND PROCESS FOR ITS MANUFACTURE

(51) International classification :H01M4/58,H01M4/62,H01M10/0525
(31) Priority Document No :10 2010 032 206.7-41
(32) Priority Date :26/07/2010
(33) Name of priority country :Germany
(86) International Application No :PCT/EP2011/062843
Filing Date :26/07/2011
(87) International Publication No :WO 2012/013685
(61) Patent of Addition to Application Number :NA
Filing Date :NA
(62) Divisional to Application Number :NA
Filing Date :NA

(71)**Name of Applicant :**
1)SÜD-CHEMIE IP GMBH & CO. KG
Address of Applicant :Lenbachplatz 6, 80333 M¼nchen, Germany
(72)**Name of Inventor :**
1)Dr. NUSPL Gerhard
2)Dr. STINNER Christoph
3)KUNZ Holger Herr
4)LIANG Guoxian

(57) Abstract :
The present invention relates to a particulate lithium transition metal phosphate with a homogeneous carbon coating deposited from the gas phase with as well as a process for its manufacture. The invention further relates the use of a carbon coated lithium transition metal phosphate as active material in an electrode, especially in a cathode.

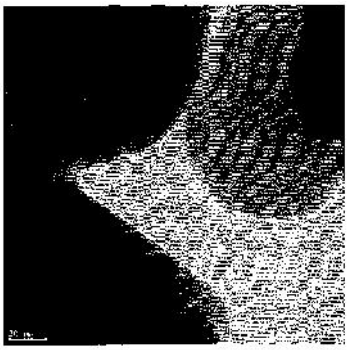

No. of Pages : 75 No. of Claims : 20

(12) PATENT APPLICATION PUBLICATION
(19) INDIA
(22) Date of filing of Application :14/12/2012
(21) Application No.1412/KOL/2012 A
(43) Publication Date : 05/07/2013

(54) Title of the invention : REFRIGERATOR

(51) International classification	:F25D
(31) Priority Document No	:10-2011-0141443
(32) Priority Date	:23/12/2011
(33) Name of priority country	:Republic of Korea
(86) International Application No	:NA
Filing Date	:NA
(87) International Publication No	: NA
(61) Patent of Addition to Application Number	:NA
Filing Date	:NA
(62) Divisional to Application Number	:NA
Filing Date	:NA

(71)**Name of Applicant :**
1)LG ELECTRONICS INC.
Address of Applicant :20 YEOUIDO-DONG, YEONGDEUNGPO-GU, SEOUL 150-721 REPUBLIC OF KOREA
(72)**Name of Inventor :**
1)HU JINSEOK
2)KANG KYELYONG
3)PARK SHINHYUN
4)PARK GUNIL
5)AHN BUHWAN
6)KIM JAEMIN

(57) Abstract :
A refrigerator includes: a refrigerator body having a storage chamber; a circulation path having a plurality of openings spaced from each other and communicated with the storage chamber, an evaporator configured to cool air, and a cooling fan which can be forward and backward rotated, and configured to circulate cool air in the storage chamber; a temperature sensor configured to sense an inner temperature of the storage chamber; and a controller configured to control a rotation direction of the cooling fan, based on a result by the temperature sensor.

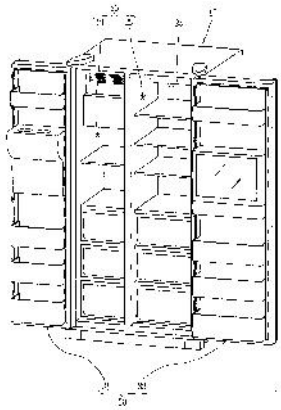

No. of Pages : 41 No. of Claims : 15

(12) PATENT APPLICATION PUBLICATION
(21) Application No.1413/KOL/2012 A
(19) INDIA
(22) Date of filing of Application :14/12/2012
(43) Publication Date : 05/07/2013

(54) Title of the invention : PLASTIC HEAD COVER OF INTERNAL COMBUSTION ENGINE

(51) International classification :F01M
(31) Priority Document No :2011-273978
(32) Priority Date :15/12/2011
(33) Name of priority country :Japan
(86) International Application No :NA
Filing Date :NA
(87) International Publication No : NA
(61) Patent of Addition to Application Number :NA
Filing Date :NA
(62) Divisional to Application Number :NA
Filing Date :NA

(71)**Name of Applicant :**
1)MAHLE FILTER SYSTEMS JAPAN CORPORATION
Address of Applicant :1-9-12 KITA-OTSUKA, TOSHIMA-KU, TOKYO 170-0004 Japan
(72)**Name of Inventor :**
1)ITO DAIZO

(57) Abstract :
A plastic head cover of an internal combustion engine having therein two parallel oil mist separator chambers comprises a plastic cover body that is adapted to be mounted on a cylinder head of the engine and includes lower portions of the separator chambers, and a plastic upper body that includes upper portions of the separator chambers and is mounted on and secured to the plastic cover body in such a manner that the upper portions possessed by the plastic upper body are mated with the lower portions possessed by the cover body, thereby forming an entire construction of the two oil mist separator chambers.

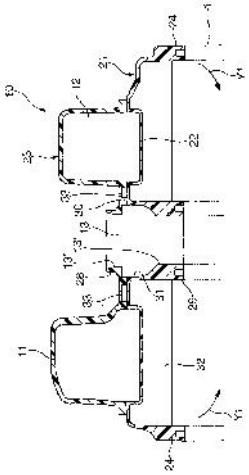

No. of Pages : 26 No. of Claims : 11

(12) PATENT APPLICATION PUBLICATION
(21) Application No.1414/KOL/2012 A
(19) INDIA
(22) Date of filing of Application :14/12/2012
(43) Publication Date : 05/07/2013

(54) Title of the invention : COMPACT REFLECTIVE LEVEL INDICATOR WITH GLASS ELEMENT

(51) International classification :G01F23/284
(31) Priority Document No :MI2011A002425
(32) Priority Date :29/12/2011
(33) Name of priority country :Italy
(86) International Application No :NA
Filing Date :NA
(87) International Publication No : NA
(61) Patent of Addition to Application Number :NA
Filing Date :NA
(62) Divisional to Application Number :NA
Filing Date :NA

(71)**Name of Applicant :**
1)CESARE BONETTI S.p.A.
Address of Applicant :VIA CESARE BONETTI, 17 20024 GARBAGNATE MILANESE (MI) ITALY
(72)**Name of Inventor :**
1)ANGELINI, PAOLO
2)ANGELINI, RAFFAELE
3)DALMASSO, GIUSEPPE

(57) Abstract :
Reflective level indicator comprising a central support piece (10) extending in the vertical direction (Z-Z), a glass element (30) extending in the vertical direction (Z-Z), a pair of flanges (40) situated opposite each other for closing the indicator, seals (20;120) arranged between the glass element (30) and the support piece (10) and the closing flanges (40), wherein said flanges (40) have a C-shaped central body (41) with short arms (42) extending in the longitudinal direction (X-X) along a section with a length such as to project above, in the same direction (Y-Y) , by an amount smaller than the width of the glass element (30) in the longitudinal direction, and a foot (43) which extends from one of the two arms (42) of the central body (41) in the transverse direction (Y-Y) and the free end of which has a flange (43a) bent in the longitudinal direction (X-X) inwards and provided with holes (43b) for receiving tie members (44a,44b); at least two cross-pieces (45) in the form of an overturned U which extend in the longitudinal direction (X-X) and the free ends (45a) of which can be inserted in the transverse direction (Y-Y) inside respective seats (41d) of the flanges (40).

No. of Pages : 12 No. of Claims : 6

(12) PATENT APPLICATION PUBLICATION
(19) INDIA
(22) Date of filing of Application :16/01/2013
(21) Application No.150/KOLNP/2013 A
(43) Publication Date : 05/07/2013

(54) Title of the invention : HIGH STRENGTH COLD ROLLED SHEET HAVING EXCELLENT FORMABILITY, AND CRASHWORTHINESS AND METHOD FOR MANUFACTURING THE SAME

(51) International classification :C22C38/06,C22C38/58,C21D9/46
(31) Priority Document No :NA
(32) Priority Date :NA
(33) Name of priority country :NA
(86) International Application No :PCT/JP2010/063949
Filing Date :12/08/2010
(87) International Publication No :WO 2012/020511
(61) Patent of Addition to Application Number :NA
Filing Date :NA
(62) Divisional to Application Number :NA
Filing Date :NA

(71)**Name of Applicant :**
1)JFE STEEL CORPORATION
Address of Applicant :2-3, Uchisaiwai-cho 2-chome, Chiyoda-ku, Tokyo 100-0011 Japan
(72)**Name of Inventor :**
1)NAKAGAITO Tatsuya
2)MATSUOKA Saiji
3)KANEKO Shinjiro
4)KAWASAKI Yoshiyasu

(57) Abstract :
A high-strength cold rolled steel sheet having excellent ductility and stretch-flangeability, and a method for manufacturing the same are provided. A high-strength cold-rolled steel sheet having excellent formability and crashworthiness includes, on a mass% basis, C: 0.05 to 0.3%, Si: 0.3 to 2.5%, Mn: 0.5 to 3.5%, P: 0.003 to 0.100%, S: 0.02% or less, Al: 0.010 to 0.5%, and balance being iron and unavoidable impurities, the high-strength cold rolled steel sheet having a microstructure including 20% or more of ferrite on an area fraction basis, 10 to 60% of tempered martensite on an area fraction basis, 0 to 10% of martensite on an area fraction basis, and 3 to 15% of retained austenite on a volume fraction basis.

No. of Pages : 36 No. of Claims : 8

(12) PATENT APPLICATION PUBLICATION
(21) Application No.1337/KOL/2012 A
(19) INDIA
(22) Date of filing of Application :20/11/2012
(43) Publication Date : 05/07/2013

(54) Title of the invention : OPTIMIZED THRESHOLD SEARCH IN ANALOG MEMORY CELLS

(51) International classification	:G11C16/26	(71)**Name of Applicant :**
(31) Priority Document No	:61/580,673	**1)APPLE INC.**
(32) Priority Date	:28/12/2011	Address of Applicant :1 INFINITE LOOP, CUPERTINO, CA 95014, U.S.A.
(33) Name of priority country	:U.S.A.	
(86) International Application No	:NA	(72)**Name of Inventor :**
Filing Date	:NA	**1)ANHOLT, MICHA**
(87) International Publication No	: NA	**2)SOMMER, NAFTALI**
(61) Patent of Addition to Application Number	:NA	
Filing Date	:NA	
(62) Divisional to Application Number	:NA	
Filing Date	:NA	

(57) Abstract :
A method includes storing data in a group of analog memory cells. The memory cells in the group are read using first read thresholds to produce first readout results, and re-read using second read thresholds to produce second readout results. Third read thresholds, which include at least one of the first read thresholds and at least one of the second read thresholds, are defined. Readout performance of the first, second and third read thresholds is evaluated based on the first and second readout results. The first, second or third read thresholds are selected based on the evaluated readout performance, and data recovery is performed using the selected read thresholds.

No. of Pages : 48 No. of Claims : 20

(12) PATENT APPLICATION PUBLICATION
(21) Application No.142/KOLNP/2013 A
(19) INDIA
(22) Date of filing of Application :16/01/2013
(43) Publication Date : 05/07/2013

(54) Title of the invention : DERIVATIVES OF OXADIAZOLE AND PYRIDAZINE, THEIR PREPARATION AND THEIR APPLICATION IN THERAPEUTICS

(51) International classification	:C07D271/06,C07D237/20,A61K31/425
(31) Priority Document No	:10 56060
(32) Priority Date	:23/07/2010
(33) Name of priority country	:France
(86) International Application No	:PCT/IB2011/053278
Filing Date	:22/07/2011
(87) International Publication No	:WO 2012/011081
(61) Patent of Addition to Application Number	:NA
Filing Date	:NA
(62) Divisional to Application Number	:NA
Filing Date	:NA

(71)**Name of Applicant :**
1)SANOFI
Address of Applicant :174 Avenue De France, F-75013 Paris France
(72)**Name of Inventor :**
1)FETT, Eykmar
2)MOUGENOT, Patrick
3)NAMANE, Claudie
4)NICOLAI, Eric
5)PHILIPPO, Christophe

(57) Abstract :
The invention relates to compounds of formula (I): in which: n is equal to 0 or 1; D represents an oxygen atom or a bond; W represents a nitrogen atom or a -CH- group; X1 represents a nitrogen atom or a -CH=CH- group; X2 represents an oxygen atom or a nitrogen atom; X3 represents an oxygen atom or a nitrogen atom; one of X1,X2,X3 being other than a nitrogen atom, X2 and X3 not being an oxygen atom at the same time; R1,R2 are absent or represent, (i) independently of one another, a hydrogen atom or a (C1 - C4)alkyl group, (ii) R1 and R2 may form, with the carbon atom to which they are attached, a -(C3-C10)cycloalkyl-, group; Y represents a -(C3-C10)cycloalkyl, aryl or aryloxy group, said groups being optionally substituted with one or more substituents chosen from a halogen atom or a (C1-C6)alkoxy group; Z1 is absent or represents an -NH- function; Z2 and Z3 are as defined in the description. The invention also relates to a process for preparing compounds of formula (I), compositions containing them and their application in therapeutics.

No. of Pages : 59 No. of Claims : 15

(12) PATENT APPLICATION PUBLICATION
(21) Application No.151/KOLNP/2013 A
(19) INDIA
(22) Date of filing of Application :16/01/2013
(43) Publication Date : 05/07/2013

(54) Title of the invention : TENSIONING MEMBER TENSIONING MEMBER ASSEMBLY, ENGINE AND STRADDLE TYPE VEHICLE

(51) International classification :F16H7/08,F02B67/06
(31) Priority Document No :JP2011-114094
(32) Priority Date :20/05/2011
(33) Name of priority country :Japan
(86) International Application No :PCT/JP2012/061764
Filing Date :08/05/2012
(87) International Publication No :WO 2012/160960
(61) Patent of Addition to Application Number :NA
Filing Date :NA
(62) Divisional to Application Number :NA
Filing Date :NA

(71)**Name of Applicant :**
1)YAMAHA HATSUDOKI KABUSHIKI KAISHA
Address of Applicant :2500 Shingai, Iwata-shi, Shizuoka, 438-8501, Japan
(72)**Name of Inventor :**
1)INOMORI Toshinori
2)NAKAJIMA Akitoshi

(57) Abstract :
An arrangement is provided using a blade tensioner to tension a cam chain, where the tensioner and cam chain can be easily attached to an engine having a cylinder body that does not have a side that can be opened. A blade shoe (168) includes a plate portion (172), front end portion (179), rear end portion (175), first jig mounting portion (300) and second jig mounting portion (302). The first jig mounting portion (300) is provided closer to the front end portion (179) than the center of the tensioning member as measured in a length direction is and a jig (200) is attached thereto. The second jig mounting portion (302) is provided closer to the rear end portion (175) than the center of the tensioning member as measured in a length direction is and the jig (200) is attached thereto. The first jig mounting portion (300) has an opening (301) facing in a direction crossing a direction in which the leaf spring (166) extends.

No. of Pages : 41 No. of Claims : 16

(12) PATENT APPLICATION PUBLICATION
(21) Application No.169/KOLNP/2013 A
(19) INDIA
(22) Date of filing of Application :18/01/2013
(43) Publication Date : 05/07/2013

(54) Title of the invention : CUTTING TOOL WITH MULTI-LAYER COATING

(51) International classification :C23C28/00
(31) Priority Document No :10 2010 039 035.6
(32) Priority Date :06/08/2010
(33) Name of priority country :Germany
(86) International Application No :PCT/EP2011/063234
Filing Date :01/08/2011
(87) International Publication No :WO 2012/016954
(61) Patent of Addition to Application Number :NA
Filing Date :NA
(62) Divisional to Application Number :NA
Filing Date :NA

(71)**Name of Applicant :**
1)WALTER AG
Address of Applicant :Derendinger Straβe 53, 72072 Tübingen, Germany
(72)**Name of Inventor :**
1)SCHIER Veit

(57) Abstract :
The invention relates to a cutting tool comprising a main part and a multilayer coating applied thereon. A first layer A made of a hard material is applied on the main part, said hard material being selected from titanium aluminum nitride (TiAIN), titanium aluminum silicon nitride (TiAISiN), chromium nitride (CrN), aluminum chromium nitride (AICrN), aluminum chromium silicon nitride (AICrSiN), and zirconium nitride (ZrN), and a second layer B made of silicon nitride (Si3N4) is applied directly over the first layer A.

No. of Pages : 13 No. of Claims : 12

(12) PATENT APPLICATION PUBLICATION
(21) Application No.11/KOLNP/2013 A
(19) INDIA
(22) Date of filing of Application :02/01/2013
(43) Publication Date : 05/07/2013

(54) Title of the invention : VACUUM SYSTEM AND METHODS FOR STERILIZATION THEREOF

(51) International classification :A61L2/18,A61L2/20,A61L2/22
(31) Priority Document No :61/363,019
(32) Priority Date :09/07/2010
(33) Name of priority country :U.S.A.
(86) International Application No :PCT/US2011/043279
Filing Date :08/07/2011
(87) International Publication No :WO 2012/006482
(61) Patent of Addition to Application Number :NA
Filing Date :NA
(62) Divisional to Application Number :NA
Filing Date :NA

(71)**Name of Applicant :**
1)SP INDUSTRIES, INC.
Address of Applicant :935 Mearns Road, Warminster, PA 18974, U.S.A.
(72)**Name of Inventor :**
1)BURGER, Christopher, Wayne

(57) Abstract :
A vacuum system comprising: a vacuum chamber; a vacuum source in operable communication with the vacuum chamber; a liquid sterilant supply; and a metering device, wherein the sterilant supply is in operable communication with the vacuum chamber via the metering device, and wherein the metering device is sized such that liquid sterilant can be introduced into the vacuum chamber as sterilant vapor.

No. of Pages : 18 No. of Claims : 20

(12) PATENT APPLICATION PUBLICATION
(19) INDIA
(22) Date of filing of Application :14/01/2013

(21) Application No.110/KOLNP/2013 A
(43) Publication Date : 05/07/2013

(54) Title of the invention : METHOD AND ARRANGEMENT FOR PAGING IN A WIRELESS COMMUNICATIONS SYSTEM

(51) International classification :H04W68/00
(31) Priority Document No :61/356,698
(32) Priority Date :21/06/2010
(33) Name of priority country :U.S.A.
(86) International Application No :PCT/SE2011/050614
Filing Date :16/05/2011
(87) International Publication No :WO 2011/162667
(61) Patent of Addition to Application Number :NA
Filing Date :NA
(62) Divisional to Application Number :NA
Filing Date :NA

(71)**Name of Applicant :**
1)TELEFONAKTIEBOLAGET L M ERICSSON (PUBL)
Address of Applicant :S-164 83 Stockholm, Sweden
(72)**Name of Inventor :**
1)BEYGZADEH, Arash

(57) Abstract :
A method in an eNodeB, a radio network controller, or a base station controller for handling paging of a first user equipment being in idle mode is provided. The base station is comprised in a communication system. The base station obtains (301) an indication from a mobility management entity or from a serving GPRS support node within the communication system. The indication indicates a type of downlink data to be transmitted to the first user equipment. After the base station has determined (302) a paging policy based on the obtained indication of type, it sends (303) a paging message to the user equipment according to the determined paging policy. The paging message notifies the first user equipment that there is downlink data to be transmitted to the first user equipment.

No. of Pages : 31 No. of Claims : 16

(12) PATENT APPLICATION PUBLICATION
(19) INDIA
(22) Date of filing of Application :14/01/2013
(21) Application No.117/KOLNP/2013 A
(43) Publication Date : 05/07/2013

(54) Title of the invention : IMPROVED METHOD OF REMOVING HYDROGEN SULFIDE

(51) International classification :C10G29/20,C07C7/152
(31) Priority Document No :12/835,805
(32) Priority Date :14/07/2010
(33) Name of priority country :U.S.A.
(86) International Application No :PCT/US2011/043780
Filing Date :13/07/2011
(87) International Publication No :WO 2012/009391
(61) Patent of Addition to Application Number :NA
Filing Date :NA
(62) Divisional to Application Number :NA
Filing Date :NA

(71)**Name of Applicant :**
1)NALCO COMPANY
Address of Applicant :1601 West Diehl Road, Naperville, Illinois, 60563-1198, U.S.A.
(72)**Name of Inventor :**
1)COMPTON Dennis R.
2)STRICKLAND J. Byron

(57) Abstract :
The invention provides a method of removing hydrogen sulfide from hydrocarbon fluids. The method involves using a nitroxide molecule to promote a sulfide scavenger such as alkyl-triazine. The nitroxide effectively accelerates the scavengers activity. This allows for the avoidance of the introduction of halides into the hydrocarbon stream.

No. of Pages : 12 No. of Claims : 4

(12) PATENT APPLICATION PUBLICATION
(21) Application No.131/KOLNP/2013 A
(19) INDIA
(22) Date of filing of Application :15/01/2013
(43) Publication Date : 05/07/2013

(54) Title of the invention : ISOPRENE OLIGOMER, POLYISOPRENE, PROCESSES FOR PRODUCING THESE MATERIALS, RUBBER COMPOSITION, AND PNEUMATIC TIRE

(51) International classification :C08G61/04,B60C1/00,C07F9/09
(31) Priority Document No :2010-160120
(32) Priority Date :14/07/2010
(33) Name of priority country :Japan
(86) International Application No :PCT/JP2011/064774
Filing Date :28/06/2011
(87) International Publication No :WO 2012/008298
(61) Patent of Addition to Application Number :NA
Filing Date :NA
(62) Divisional to Application Number :NA
Filing Date :NA

(71)**Name of Applicant :**
1)SUMITOMO RUBBER INDUSTRIES, LTD.
Address of Applicant :6-9, Wakinohama-cho 3-chome, Chuo-ku, Kobe-shi, Hyogo 6510072 Japan
2)YAMAGATA UNIVERSITY
(72)**Name of Inventor :**
1)MIYAGI Yukino
2)ICHIKAWA Naoya
3)OHYA Norimasa

(57) Abstract :
The present invention relates to: an isoprene oligomer composed of a trans structural moiety represented by formula (1) and a cis structural moiety, wherein at least one of atoms or groups of atoms contained in the trans structural moiety is substituted by another atom or another group of atoms; and a polyisoprene which is biosynthesized from the isoprene oligomer and an isopentenyl diphosphate. The present invention also provides: a rubber composition containing the isoprene oligomer and/or the polyisoprene; and a pneumatic tire in which the rubber composition is used in a part (e.g. a tread a side wall) of the tire. (In formula (1), n represents an integer of 1 10; m represents an integer of 1-30; Y represents a hydroxy group, a formyl group, a carboxy group, an ester group, a carbonyl group or a group represented by formula (2).

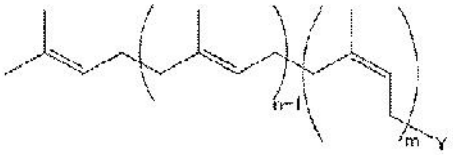

No. of Pages : 130 No. of Claims : 14

(12) PATENT APPLICATION PUBLICATION
(19) INDIA
(22) Date of filing of Application :21/01/2013
(21) Application No.177/KOLNP/2013 A
(43) Publication Date : 05/07/2013

(54) Title of the invention : C1-C2 IMPLANT AND METHODS OF USE

(51) International classification :A61F2/44,A61B17/70
(31) Priority Document No :12/854,534
(32) Priority Date :11/08/2010
(33) Name of priority country :U.S.A.
(86) International Application No :PCT/US2011/047213
Filing Date :10/08/2011
(87) International Publication No :WO 2012/021592
(61) Patent of Addition to Application Number :NA
Filing Date :NA
(62) Divisional to Application Number :NA
Filing Date :NA

(71)**Name of Applicant :**
1)WARSAW ORTHOPEDIC, INC.
Address of Applicant :2500 Silveus Crossing, Warsaw, Indiana 46581 U.S.A.
(72)**Name of Inventor :**
1)LIM, Roy, K
2)ROBERTSON, Peter

(57) Abstract :
An implant for positioning between the C1 and C2 vertebral members. The implants may include a blade sized to be inserted between the C1 and C2 members. The blade may include a length measured between an insertion tip and a second side, and a height measured between a superior side that contacts against the C1 vertebral member and an inferior side that contacts against the C2 vertebral member. A leg may be positioned at the second side of the blade. The leg may extend outward below the inferior side of the blade and away from second side of the blade to extend across an exterior of the C2 vertebral member. An aperture is positioned to extend through the implant. The implant may extend through the blade or may extend through a flange that extends from the blade.

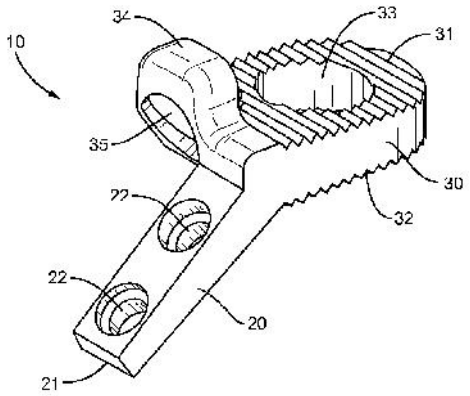

No. of Pages : 26 No. of Claims : 15

(12) PATENT APPLICATION PUBLICATION
(19) INDIA
(22) Date of filing of Application :02/01/2013
(21) Application No.10/KOLNP/2013 A
(43) Publication Date : 05/07/2013

(54) Title of the invention : PROCESS FOR THE HYDROCONVERSION OF A LOW QUALITY HYDROCARBONACEOUS FEEDSTOCK

(51) International classification :B01J31/22,B01J27/047,B01J27/049
(31) Priority Document No :10305743.6
(32) Priority Date :06/07/2010
(33) Name of priority country :EPO
(86) International Application No :PCT/EP2011/061281
Filing Date :05/07/2011
(87) International Publication No :WO 2012/004243
(61) Patent of Addition to Application Number :NA
Filing Date :NA
(62) Divisional to Application Number :NA
Filing Date :NA

(71)**Name of Applicant :**
1)TOTAL RAFFINAGE MARKETING
Address of Applicant :24 Cours Michelet, 92800 Puteaux, France
(72)**Name of Inventor :**
1)BORREMANS, Didier
2)DATH, Jean-Pierre
3)HORTMANN, Kai

(57) Abstract :
The invention concerns a process for upgrading lower quality carbonaceous feedstock using a slurry catalyst composition. The use of particular organometallic compounds as precursors for the dispersed active catalyst allows for reduced coke formation.

No. of Pages : 24 No. of Claims : 14

(12) PATENT APPLICATION PUBLICATION
(19) INDIA
(22) Date of filing of Application :11/01/2013

(21) Application No.100/KOLNP/2013 A
(43) Publication Date : 05/07/2013

(54) Title of the invention : MACHINE FOR ASSEMBLING CARDBOARD BOXES

(51) International classification :B31B1/06,B31B1/44,B65B35/24
(31) Priority Document No :U201030663
(32) Priority Date :25/06/2010
(33) Name of priority country :Spain
(86) International Application No :PCT/ES2011/070266
Filing Date :15/04/2011
(87) International Publication No :WO 2011/161287
(61) Patent of Addition to Application Number :NA
Filing Date :NA
(62) Divisional to Application Number :NA
Filing Date :NA

(71)**Name of Applicant :**
1)BOIX MAQUINARIA, S.L.
Address of Applicant :Polgono Industrial La Granadina, Manzana, 1 - Calle 5, E-03349 San Isidro De Albatera (Alicante) Spain
(72)**Name of Inventor :**
1)BOIX JAÉN, José

(57) Abstract :
The invention relates to a machine for assembling cardboard boxes, including a device for feeding sheets of cardboard that are used to form the boxes in a forming station comprising an assembly device including a mold and a male element that descends by means of a vertical linear actuator, in order to form the box inside the mold, co-operating with the latter. The invention is characterized in that it comprises a frame (33) having a hollow surrounding structure that supports the feeder device which is removably connected to the frame (33) in a cantilevered manner.

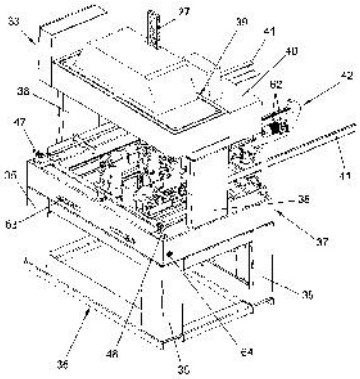

No. of Pages : 23 No. of Claims : 14

(12) PATENT APPLICATION PUBLICATION
(21) Application No.1372/KOL/2010 A
(19) INDIA
(22) Date of filing of Application :06/12/2010
(43) Publication Date : 05/07/2013

(54) Title of the invention : METHOD AND APPARATUS TO DETECT THE MICROCALCIFICATIONS IN X-RAY IMAGES USING NONLINEAR ENERGY OPERATOR

(51) International classification :G06K9/62
(31) Priority Document No :NA
(32) Priority Date :NA
(33) Name of priority country :NA
(86) International Application No :NA
Filing Date :NA
(87) International Publication No : NA
(61) Patent of Addition to Application Number :NA
Filing Date :NA
(62) Divisional to Application Number :NA
Filing Date :NA

(71)**Name of Applicant :**
1)INDIAN INSTITUTE OF TECHNOLOGY, KHARAGPUR
Address of Applicant :SPONSORED RESEARCH & INDUSTRIAL CONSULTANCY, INDIA INSTITUTE OF TECHNOLOGY, KHARAGPUR-721302, WEST BENGAL, INDIA
(72)**Name of Inventor :**
1)MUKHOPADHYAY, SUDIPTA
2)SETH, SUBHENDU

(57) Abstract :
A method and system to detect the microcalcifications (Me) in different type of images viz. X-ray images/ mammograms/computer tomography with varied densities using nonlinear energy operator (NEO) is disclosed to favor precise detection of early breast cancer. Such Microcalcifications are associated with both high intensity and high frequency content. The same NEO output is useful to detect and remove the irrelevant curvilinear structures(CLS) thereby helps in reducing the false alarms in microcalcification detection technique. The is effective on different dataset (scanned film, mammograms with large spatial resolution such as CR and DR) of varied breast composition (viz. dense, fatty glandular, fatty), demonstrated quantitatively by Free-response receiver operating characteristic (FROe). Importantly the method and apparatus of the invention can be used in conjunction with machine learning techniques viz. SVM to favour incipient or small microcalcifications and enabling early detection of breast cancer, thus benefiting radiologists in confirming detection of micro-calcifications in X-rays images/mammograms and reducing death rates.

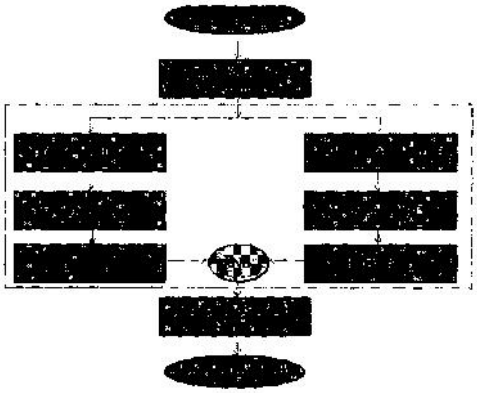

No. of Pages : 39 No. of Claims : 12

(12) PATENT APPLICATION PUBLICATION
(19) INDIA
(22) Date of filing of Application :22/01/2013
(21) Application No.181/KOLNP/2013 A
(43) Publication Date : 05/07/2013

(54) Title of the invention : VIBRATION SUPPRESSION CONTROL SYSTEM FOR AN ELECTRICALLY DRIVEN VEHICLE AND VIBRATION SUPPRESSION METHOD FOR THE SAME

(51) International classification :H02P29/00,B60L15/20
(31) Priority Document No :2010-166207
(32) Priority Date :23/07/2010
(33) Name of priority country :Japan
(86) International Application No :PCT/JP2011/066541
Filing Date :21/07/2011
(87) International Publication No :WO 2012/011521
(61) Patent of Addition to Application Number :NA
Filing Date :NA
(62) Divisional to Application Number :NA
Filing Date :NA

(71)**Name of Applicant :**
1)NISSAN MOTOR CO., LTD.
Address of Applicant :2, Takara-cho, Kanagawa-ku Yokohama-shi, Kanagawa 221-0023, Japan
(72)**Name of Inventor :**
1)MOTOSUGI Jun
2)FUJIMOTO Satoru
3)ASHIZAWA Hiroyuki

(57) Abstract :
Provided is an electrically driven vehicle, wherein unexpected vibration or shock is prevented during interruption of torque transmission. An electric vehicle having an electric motor (1) as the power source thereof is provided with an F/F calculation or operation unit (91), an F/B calculation or operation unit (92), an adder (97), model determination units (93, 95), and target torque value switching units (94, 96). The F/F calculation unit (91) calculates a first target torque value (Tm1) by F/F operation. The F/B calculation unit (92) calculates a second target torque value (Tm2) by F/B operation using a model (Gp (s)). The adder (97) adds the first target torque value (Tm1) and the second target torque value (Tm2), to obtain a motor torque command value (Tm). The model determination units (93, 95) evaluate whether or not an interruption in the torque transmission to drive shafts (4) occurs. The target torque value switching units (94, 96) stop the F/F and F/B operations while torque transmission interruption is confirmed.

No. of Pages : 45 No. of Claims : 10

(12) PATENT APPLICATION PUBLICATION
(21) Application No.111/KOLNP/2013 A
(19) INDIA
(22) Date of filing of Application :14/01/2013
(43) Publication Date : 05/07/2013

(54) Title of the invention : METHODS AND ARRANGEMENTS FOR PROCESSING OF MEASUREMENT DATA IN CELLULAR COMMUNICATION SYSTEMS

(51) International classification :H04W24/10
(31) Priority Document No :61/356,823
(32) Priority Date :21/06/2010
(33) Name of priority country :U.S.A.
(86) International Application No :PCT/SE2011/050531
Filing Date :29/04/2011
(87) International Publication No :WO 2011/162665
(61) Patent of Addition to Application Number :NA
Filing Date :NA
(62) Divisional to Application Number :NA
Filing Date :NA

(71)**Name of Applicant :**
1)TELEFONAKTIEBOLAGET LM ERICSSON (PUBL)
Address of Applicant :S-164 83 Stockholm, Sweden
(72)**Name of Inventor :**
1)PALM, Håkan

(57) Abstract :
The problem of unsynchronized internal clocks of user equipments in a cellular communication system is addressed by a solution where a mechanism relying on a standalone clock function in user equipments is provided. Embodiments provide a network node that distributes a time reference to a user equipment (UE), and wherein the UE, using an internal clock function, time-stamps the logged measurements and/ or events relative to the received time reference. When the UE has logged measurements the UE indicates to the network node that it has an available measurement log. The network node may then request several UEs to deliver their measurement log, respectively. The network node is then able to retrieve time stamped measurement information from the measurement log of each UE relative the sent time reference. Furthermore, the network node is then able to compare measurement information from each UE in a cell provided at the same time interval in all UEs.

No. of Pages : 23 No. of Claims : 22

(12) PATENT APPLICATION PUBLICATION
(19) INDIA
(22) Date of filing of Application :14/01/2013
(21) Application No.118/KOLNP/2013 A
(43) Publication Date : 05/07/2013

(54) Title of the invention : KEY AND KEYWAY CONNECTORS

(51) International classification :F16B3/04,F16B12/22,F16B5/07
(31) Priority Document No :2010902740
(32) Priority Date :22/06/2010
(33) Name of priority country :Australia
(86) International Application No:PCT/AU2011/000759
Filing Date :21/06/2011
(87) International Publication No :WO 2011/160173
(61) Patent of Addition to Application Number :NA
Filing Date :NA
(62) Divisional to Application Number :NA
Filing Date :NA

(71)**Name of Applicant :**
1)JOINLOCK PTY LTD
Address of Applicant :Unit 2, 30 Walker Street, Tennyson, Queensland 4105, Australia
(72)**Name of Inventor :**
1)PETTIGREW John Hamish Alexander
2)CAMERON Dean Osman
3)PERCY Thomas David

(57) Abstract :
A method of mechanically connecting two or more components together. In one embodiment the method comprises the steps of: i. mounting at least one elongate keyway connector (10) comprising regularly spaced keyways (13) to a first component wherein the keyways (13) provide a longitudinal keyway passage (16); ii. mounting at least one elongate key connector (11) comprising regularly spaced keys (14) to a second component; and iii. extending the keys (14) longitudinally within the keyway passage (16) and engaging the keyways (13) with the keys (14) to connect the first and second components together. The connecting method can be used in the construction of flat-pack and ready-to-assemble designed furniture, in the construction of buildings or other structures, in the construction of storage, packaging transportation and materials handling products, as well as for the ready replacement of components that tend to wear out during operation or use.

No. of Pages : 36 No. of Claims : 28

(12) PATENT APPLICATION PUBLICATION
(21) Application No.158/KOL/2011 A
(19) INDIA
(22) Date of filing of Application :04/02/2011
(43) Publication Date : 05/07/2013

(54) Title of the invention : LONG LASTING HAIR CONDITIONING COMPOSITION

(51) International classification :A61K8/73
(31) Priority Document No :NA
(32) Priority Date :NA
(33) Name of priority country :NA
(86) International Application No :NA
Filing Date :NA
(87) International Publication No : NA
(61) Patent of Addition to Application Number :NA
Filing Date :NA
(62) Divisional to Application Number :NA
Filing Date :NA

(71)**Name of Applicant :**
1)WACKER METROARK CHEMICALS PVT. LTD.
Address of Applicant :VILL & P.O. CHANDI, P.S.-BISHNUPUR, 24 PARGANAS(SOUTH), PIN - 743503, WEST BENGAL,INDIA
(72)**Name of Inventor :**
1)PAUL, AMIT KUMAR
2)DUTTA, AYNDRILA

(57) Abstract :
A hair conditioning kit comprising silicone active based hair conditioning formulation in atleast two parts adapted to favour long lasting conditioning effect on the hair and maintain lively hair for a longer period of time comprising formulations of selective organopolysiloxane molecules with carrier solvent and particularly, relates to long lasting hair conditioning formulation adapted to favour entering of reactive silicones in the hair cortex through hair cuticles to generate reacted high viscosity polymer of high molecular weight to be retained in the narrow passage between the hair cuticles for a longer time on hair surface even after number of hair wash and keep the hair more lively for a longer duration.

No. of Pages : 31 No. of Claims : 9

(12) PATENT APPLICATION PUBLICATION
(21) Application No.190/KOLNP/2013 A
(19) INDIA
(22) Date of filing of Application :22/01/2013
(43) Publication Date : 05/07/2013

(54) Title of the invention : DEVICE FOR INDICATING AMOUNT OF COLLECTED DUST, AND ELECTRIC CLEANER WITH SAME

(51) International classification :A47L9/19
(31) Priority Document No :2010-214881
(32) Priority Date :27/09/2010
(33) Name of priority country :Japan
(86) International Application No :PCT/JP2011/005297
Filing Date :21/09/2011
(87) International Publication No :WO 2012/042789
(61) Patent of Addition to Application Number :NA
Filing Date :NA
(62) Divisional to Application Number :NA
Filing Date :NA

(71)**Name of Applicant :**
1)PANASONIC CORPORATION
Address of Applicant :1006,Oaza Kadoma, Kadoma-shi, Osaka-571-8501, Japan
(72)**Name of Inventor :**
1)IWASA, Tooru

(57) Abstract :
Collected-dust-amount indicating device (16) includes a pointer tube, at least a part of which is configured with a transparent material. The pointer tube includes a first end portion to which a first pressure is applied, and a second end portion to which a second pressure is applied. In the inside of the pointer tube, a pointer is disposed which is displaced by a differential pressure between the first pressure applied to the first end portion and the second pressure applied to the second end portion. Moreover, a pointer spring is disposed to be accommodated in the pointer tube such that the pointer spring biases the pointer toward larger one of the first pressure and the second pressure.

No. of Pages : 41 No. of Claims : 9

(12) PATENT APPLICATION PUBLICATION
(19) INDIA
(22) Date of filing of Application :15/01/2013
(21) Application No.124/KOLNP/2013 A
(43) Publication Date : 05/07/2013

(54) Title of the invention : BOPP FILM WITH HIGH AC BREAKDOWN STRENGTH

(51) International classification :C08F110/06,C08J5/18,C08K5/00
(31) Priority Document No :10172111.6
(32) Priority Date :06/08/2010
(33) Name of priority country :EPO
(86) International Application No :PCT/EP2011/063249
Filing Date :01/08/2011
(87) International Publication No :WO 2012/016964
(61) Patent of Addition to Application Number :NA
Filing Date :NA
(62) Divisional to Application Number :NA
Filing Date :NA

(71)**Name of Applicant :**
1)BOREALIS AG
Address of Applicant :IZD Tower, Wagramerstrasse 17-19, A-1220 Vienna, Austria
(72)**Name of Inventor :**
1)GLOGER Dietrich
2)KLIMKE, Katja
3)FIEBIG, Joachim
4)GREIN, Christelle
5)PERSSON, Robert

(57) Abstract :
Polypropylene composition comprising a polypropylene and an α-nucleating agent, wherein the polypropylene composition has a comonomer content of equal or below 1.0 wt.-% <2,1> erythro regiodefects of more than 0.1 mol.-% and at least 9.0wt-% of a crystalline fraction crystallizing in the temperature range of above 160 to 170 °C, wherein said fraction is determined by the stepwise isothermal segregation technique (SIST).

No. of Pages : 48 No. of Claims : 16

(12) PATENT APPLICATION PUBLICATION
(19) INDIA
(22) Date of filing of Application :15/01/2013
(21) Application No.132/KOLNP/2013 A
(43) Publication Date : 05/07/2013

(54) Title of the invention : PROCESS FOR PREPARING PYRANO - [2,3-C]PYRIDINE DERIVATIVES

(51) International classification :C07D498/02
(31) Priority Document No :61/365,880
(32) Priority Date :20/07/2010
(33) Name of priority country :U.S.A.
(86) International Application No :PCT/US2011/044489
Filing Date :19/07/2011
(87) International Publication No :WO 2012/012391
(61) Patent of Addition to Application Number :NA
Filing Date :NA
(62) Divisional to Application Number :NA
Filing Date :NA

(71)**Name of Applicant :**
1)GLAXO GROUP LIMITED
Address of Applicant :Glaxo Wellcome House, Berkeley Avenue, Greenford, Middlesex GB UB6ONN U.K.
(72)**Name of Inventor :**
1)SISKO, Joseph
2)MANS, Douglas
3)YIN, Hao

(57) Abstract :
The present invention relates to a process comprising the step of dehydrating a compound of Formula (I): with a suitable dehydrating reagent to form a compound of Formula (II): wherein R1- R7 as defined herein. Compounds of Formula (II) have shown promise as intermediates to compounds useful for treating bacterial infections.

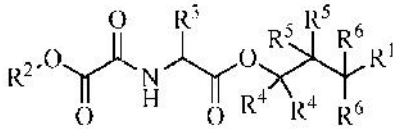

(I)

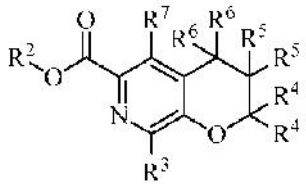

No. of Pages : 24 No. of Claims : 17

(12) PATENT APPLICATION PUBLICATION
(19) INDIA
(22) Date of filing of Application :03/02/2011

(21) Application No.149/KOL/2011 A
(43) Publication Date : 05/07/2013

(54) Title of the invention : A DEVICE FOR DRYING EDIBLE PRODUCTS

(51) International classification :A21D13/00
(31) Priority Document No :NA
(32) Priority Date :NA
(33) Name of priority country :NA
(86) International Application No :NA
Filing Date :NA
(87) International Publication No : NA
(61) Patent of Addition to Application Number :NA
Filing Date :NA
(62) Divisional to Application Number :NA
Filing Date :NA

(71)**Name of Applicant :**
1)MANIHAR SHARMA
Address of Applicant :NOGMEIBUNG IMPHAL, MANIPUR-795001 Manipur India
(72)**Name of Inventor :**
1)MANIHAR SHARMA

(57) Abstract :
This invention relates to a device for drying edible products. Particularly this invention relates to a device for drying vegetables. More particularly, this present invention relates to a device for drying edible product includes the body having two layers, i.e., outer insulated wall and inner perforated aluminum sheet in which insulated wall is a glass wool sandwiched between inner and outer layer steel.

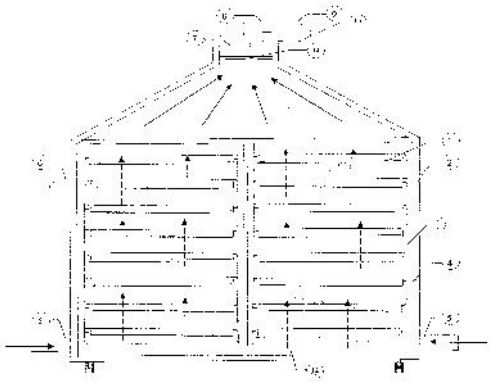

No. of Pages : 14 No. of Claims : 8

(12) PATENT APPLICATION PUBLICATION
(19) INDIA
(22) Date of filing of Application :16/01/2013
(21) Application No.149/KOLNP/2013 A
(43) Publication Date : 05/07/2013

(54) Title of the invention : FUSED HETEROCYCLIC COMPOUNDS AS PHOSPHODIESTERASES (PDES) INHIBITORS

(51) International classification	:C07D471/04,C07D473/28,C07D487/04
(31) Priority Document No	:61/358,121
(32) Priority Date	:24/06/2010
(33) Name of priority country	:U.S.A.
(86) International Application No Filing Date	:PCT/US2011/041443 :22/06/2011
(87) International Publication No	:WO 2011/163355
(61) Patent of Addition to Application Number Filing Date	:NA :NA
(62) Divisional to Application Number Filing Date	:NA :NA

(71)**Name of Applicant :**
1)TAKEDA PHARMACEUTICAL COMPANY LIMITED
Address of Applicant :1-1, Doshomachi 4-chome, Chuo-ku, Osaka-shi, Osaka 541-0045, Japan
(72)**Name of Inventor :**
1)TANIGUCHI,Takahiko
2)YOSHIKAWA,Masato
3)MIURA,Kasei
4)HASUI,Tomoaki
5)HONDA,Eiji
6)IMAMURA,Keisuke
7)KAMATA,Makoto
8)KAMISAKI,Haruhi
9)QUINN, John, F.
10)RAKER,Joseph
11)CAMARA,Fatoumata
12)WANG,Yi

(57) Abstract :
The present invention provides a compound which has the effect of PDE inhibition, and which is useful as an agent for preventing or treating schizophrenia or so on represented by the formula (I): wherein ring A represents an optionally substituted 6-membered ring; any one or two of from Z1 to Z4 represents -N=, and the others represent -CH=; Y represents an oxygen atom, a sulfur atom, an optionally substituted methylene group or -NRC-; Rc represents a hydrogen atom, or a substituent; and R represents (1) a group represented by the formula: wherein R1 represents a phenyl group or 5- to 10-membered heterocyclic group, each of which is optionally substituted; L represents a sulfur atom, an oxygen atom, an optionally substituted methylene group, -CO-, -NRa-, -CH2O-, -NRaCOO-, - NRaCONRb-, -NRaCOCH2-, -NRaCO-, Ra and Rb are the same or different and each represents a hydrogen atom, or an optionally substituted C1-6 alkyl group, or L and R1 in combination optionally form an optionally substituted bi- or tri-cyclic fused heterocyclic group; and ring B1 represents a benzene ring, a pyridine ring, a pyrimidine ring, a pyrazine ring or a pyridazine ring, each of which is optionally substituted; or (2) a group represented by the formula: wherein R2 represents a phenyl group or 5- to 10-membered heterocyclic group, each of which is optionally substituted; ring B2 represents a benzene ring, a pyridine ring, a pyrimidine ring, a pyrazine ring or a pyridazine ring, each of which is optionally substituted; and ring D represents an optionally further substituted 5- or 6- membered ring; or a salt thereof..

No. of Pages : 383 No. of Claims : 23

(12) PATENT APPLICATION PUBLICATION
(19) INDIA
(22) Date of filing of Application :18/01/2013
(21) Application No.167/KOLNP/2013 A
(43) Publication Date : 05/07/2013

(54) Title of the invention : SYSTEM AND METHOD FOR OPTIMIZING FUEL ECONOMY USING PREDICTIVE ENVIRONMENT AND DRIVER BEHAVIOR INFORMATION

(51) International classification :F02D 28/00
(31) Priority Document No :61/366,322
(32) Priority Date :21/07/2010
(33) Name of priority country :U.S.A.
(86) International Application No :PCT/US2011/044884
Filing Date :21/07/2011
(87) International Publication No :WO 2012/012655
(61) Patent of Addition to Application Number :NA
Filing Date :NA
(62) Divisional to Application Number :NA
Filing Date :NA

(71)**Name of Applicant :**
1)EATON CORPORATION
Address of Applicant :Eaton Center, 1111 Superior Avenue, Cleveland, OH 44114-2584, U.S.A.
(72)**Name of Inventor :**
1)TANG Zhijun
2)NOWAK, Michael, P.
3)SALTSMAN, Benjamin
4)AMBHORE, Dnyaneshwar
5)MORRIS, Benjamin
6)TSOURAPAS, Vasilios
7)PATIL, Chinmaya
8)AL-ATAT, Hassan

(57) Abstract :
Disclosed is an exemplary method for optimizing vehicle performance. The method includes determining an optimized drive torque for maximizing vehicle fuel economy and detecting a driver requested drive torque. A determination is made on whether the driver requested drive torque is performance related or safety related. The arbitrated drive torque is set to the optimized drive torque when it is determined that the driver requested drive torque is not performance and safety related. The arbitrated drive torque is set to the driver requested drive torque when it is determined that the driver requested drive torque is either performance or safety related.

No. of Pages : 38 No. of Claims : 22

(12) PATENT APPLICATION PUBLICATION
(19) INDIA
(22) Date of filing of Application :22/01/2013
(21) Application No.189/KOLNP/2013 A
(43) Publication Date : 05/07/2013

(54) Title of the invention : METAL FREE ACID DYES, METHODS FOR THE PRODUCTION THEREOF AND THEIR USE

(51) International classification :C09D11/00,D06P3/24,C09B33/06
(31) Priority Document No :201008800-3
(32) Priority Date :29/11/2010
(33) Name of priority country :Singapore
(86) International Application No :PCT/EP2011/005908
Filing Date :24/11/2011
(87) International Publication No :WO 2012/072210
(61) Patent of Addition to Application Number :NA
Filing Date :NA
(62) Divisional to Application Number :NA
Filing Date :NA

(71)**Name of Applicant :**
1)DYSTAR COLOURS DISTRIBUTION GMBH
Address of Applicant :Industriepark Höchst, Gebäude B 598, 65926 Frankfurt am Main, Germany
(72)**Name of Inventor :**
1)BARBIERU Roxana
2)SIVAMURUGAN Vajiravelu

(57) Abstract :
The present invention relates to dyes of the formula (I) in which R1 to R10, D1 and D2 are defined as given in claim 1, a process for preparing them, and their use for dyeing and printing hydroxyl- and/or carboxamido-containing materials.

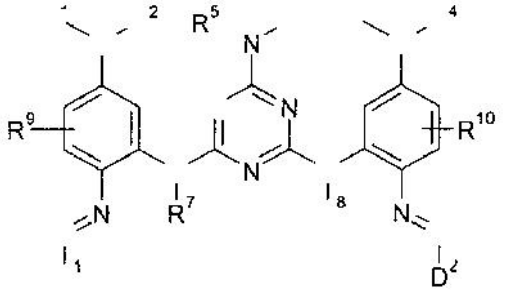

I

No. of Pages : 33 No. of Claims : 8

(12) PATENT APPLICATION PUBLICATION
(19) INDIA
(22) Date of filing of Application :24/01/2013
(21) Application No.210/KOLNP/2013 A
(43) Publication Date : 05/07/2013

(54) Title of the invention : COMMUNICATION SETTING METHOD, WIRELESS BASE STATION, AND MOBILE STATION

(51) International classification :H04W36/18,H04W36/38,H04W92/20
(31) Priority Document No :NA
(32) Priority Date :NA
(33) Name of priority country :NA
(86) International Application No :PCT/JP2010/005050
Filing Date :12/08/2010
(87) International Publication No :WO 2012/020457
(61) Patent of Addition to Application Number :NA
Filing Date :NA
(62) Divisional to Application Number :NA
Filing Date :NA

(71)**Name of Applicant :**
1)FUJITSU LIMITED
Address of Applicant :1-1, Kamikodanaka 4-chome, Nakahara-ku, Kawasaki-shi, Kanagawa 211-8588, Japan
(72)**Name of Inventor :**
1)TANAKA, Yoshinori

(57) Abstract :
In a mobile communication system in an embodiment, when a handover of a mobile station which is a target of coordinated communications among multiple wireless base stations is detected, at least a part of setting procedure for the coordinated communications (CoMP setting procedure) is executed before completion of the handover. Hence, the coordinated transmission for the mobile station can be resumed earlier after the handover, and any reduction in the communication quality or throughput caused by the resume of the coordinated communication after the handover of the mobile station can be prevented.

No. of Pages : 46 No. of Claims : 17

(12) PATENT APPLICATION PUBLICATION
(21) Application No.135/KOLNP/2013 A
(19) INDIA
(22) Date of filing of Application :15/01/2013
(43) Publication Date : 05/07/2013

(54) Title of the invention : MAGNETICALLY ACTUATED RECIPROCATING MOTOR AND PROCESS USING REVERSE MAGNETIC SWITCHING

(51) International classification :H02K7/06
(31) Priority Document No :12/832,928
(32) Priority Date :08/07/2010
(33) Name of priority country :U.S.A.
(86) International Application No :PCT/US2011/043046
Filing Date :06/07/2011
(87) International Publication No :WO 2012/006332
(61) Patent of Addition to Application Number :NA
Filing Date :NA
(62) Divisional to Application Number :NA
Filing Date :NA

(71)**Name of Applicant :**
1)GOSVENER, Kendall, C.
Address of Applicant :8206 W. Doe Avenue, Visalia, CA 93291, U.S.A.
(72)**Name of Inventor :**
1)GOSVENER, Kendall, C.

(57) Abstract :
A magnetically actuated reciprocating motor utilizes the stored energy of permanent magnets and an electromagnetic field to reciprocally drive a magnetic actuator. A converting mechanism converts reciprocating motion of the magnetic actuator to rotary motion for powering a work object. A solenoid, comprising a nonferromagnetic spool having a tubular center section with a coil of wire wrapped around the center section, is connected to a source of power and a switching mechanism. The magnetic actuator has permanent magnets disposed inside a tubular shaft at each end thereof. The switching mechanism switches the magnetic polarity at the ends of the solenoid to alternatively repel and attract the permanent magnets. The shaft is reciprocatively received through the center section of the solenoid. A controlling mechanism interconnects an output shaft, rotatably powered by the magnetic actuator, and the switching mechanism to switch the polarity of the solenoid to drive the magnetic actuator.

No. of Pages : 49 No. of Claims : 20

(12) PATENT APPLICATION PUBLICATION
(19) INDIA
(22) Date of filing of Application :16/01/2013

(21) Application No.143/KOLNP/2013 A
(43) Publication Date : 05/07/2013

(54) Title of the invention : PROCESS FOR PREPARING BENZOFURAN DERIVATIVES SUBSTITUTED AT POSITION 5

(51) International classification :C07D307/80,C07C251/16,C07C39/04
(31) Priority Document No :1055951
(32) Priority Date :21/07/2010
(33) Name of priority country :France
(86) International Application No :PCT/FR2011/051751
Filing Date :20/07/2011
(87) International Publication No :WO 2012/010802
(61) Patent of Addition to Application Number :NA
Filing Date :NA
(62) Divisional to Application Number :NA
Filing Date :NA

(71)**Name of Applicant :**
1)SANOFI
Address of Applicant :174 Avenue De France, F-75013 Paris France
(72)**Name of Inventor :**
1)BAILLY, Fréderic
2)BON, Xavier
3)VAYRON, Philippe

(57) Abstract :
The invention relates to a process for preparing benzofuran derivatives of general formula I, in which R represents a nitro or ester-COOR group, where R represents an alkyl group, R1 represents hydrogen or an alkyl group and R2 represents hydrogen, a halogen, a hydroxyl, haloalkyl, alkyL alkoxy, dialkylaminoalkoxy or dialkylaminoalkyl group: by coupling the hydroxylamine with a diketone of general formula III: in order to form an oxime that is then cyclized by heating in order to form the desired compound.

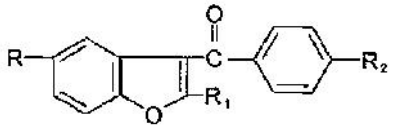
(I)

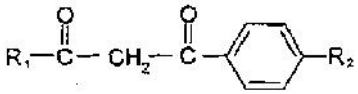
(III)

No. of Pages : 39 No. of Claims : 20

(12) PATENT APPLICATION PUBLICATION
(19) INDIA
(22) Date of filing of Application :16/01/2013
(21) Application No.152/KOLNP/2013 A
(43) Publication Date : 05/07/2013

(54) Title of the invention : BLOWER DEVICE

(51) International classification	:F04D29/58,F04D29/28,F04D29/66
(31) Priority Document No	:2010-151875
(32) Priority Date	:02/07/2010
(33) Name of priority country	:Japan
(86) International Application No	:PCT/JP2011/063279
Filing Date	:09/06/2011
(87) International Publication No	:WO 2012/002129
(61) Patent of Addition to Application Number	:NA
Filing Date	:NA
(62) Divisional to Application Number	:NA
Filing Date	:NA

(71)**Name of Applicant :**
1)DAIKIN INDUSTRIES, LTD.
Address of Applicant :Umeda Center Building, 4-12, Nakazaki-Nishi 2-Chome, Kita-ku, Osaka-shi, Osaka 530-8323, Japan
(72)**Name of Inventor :**
1)ISHII Shinji
2)NAGAO Mitsuhisa

(57) Abstract :
A blower device, wherein an object thereof is to reduce blowing noise presumed to be due to interference between air flowing along a hub and air flowing out through openings. In a blower device (10), a fan rotor (20) is a sirocco fan configured from a hub (25), a main plate (29), and a plurality of fan blades (26). In the blower device (10), openings (24a) are provided in the lower part (non-indrawing side) of a motor cover (24). The openings (24a) are disposed over 0 to 45% of the height dimension H of the fan rotor (20), with respect to an end section (28) on the non-indrawing side of the fan rotor (20). Accordingly, there is expected to be a reduction in noise because there is less interference between air flowing from the indrawing side of the fan rotor (20) to the discharge side and air flowing out through the openings (24a).

No. of Pages : 24 No. of Claims : 10

(12) PATENT APPLICATION PUBLICATION
(19) INDIA
(22) Date of filing of Application :22/01/2013
(21) Application No.183/KOLNP/2013 A
(43) Publication Date : 05/07/2013

(54) Title of the invention : VORTEX RESONANCE WIND TURBINE

(51) International classification :F03G7/08,F03D5/06,F03D9/00
(31) Priority Document No :P201001003
(32) Priority Date :02/08/2010
(33) Name of priority country :Spain
(86) International Application No :PCT/ES2011/000252
Filing Date :01/08/2011
(87) International Publication No :WO 2012/017106
(61) Patent of Addition to Application Number :NA
Filing Date :NA
(62) Divisional to Application Number :NA
Filing Date :NA

(71)**Name of Applicant :**
1)DEUTECNO, S.L.
Address of Applicant :Calle Lopez De Hoyos N° 462, Portal 2, 3°C, 28043 Madrid - Spain
2)ABACCUS SOLUCIONES E INNOVACION S.L.
(72)**Name of Inventor :**
1)YÁÑEZ VILLARREAL, David Jesús

(57) Abstract :
Wind turbine consisting of an anchoring to the ground or to a base and a mast, the natural oscillation frequency of which is purposely adjusted to the frequency of appearance of the air vortices or eddies produced after the collision of a laminar and stationary airflow against the surface thereof.The aeroelastic energy thus absorbed is converted into electrical energy due to the use of materials with high electromechanical coupling.

No. of Pages : 15 No. of Claims : 2

(12) PATENT APPLICATION PUBLICATION
(19) INDIA
(22) Date of filing of Application :24/01/2013
(21) Application No.211/KOLNP/2013 A
(43) Publication Date : 05/07/2013

(54) Title of the invention : CIS-TETRAHYDRO-SPIRO(CYCLOHEXANE-1,1' -PYRIDO[3,4-B]INDOLE)-4-AMINE DERIVATIVES

(51) International classification :C07D471/10,A61K31/438,A61P25/04
(31) Priority Document No :10007822.9
(32) Priority Date :28/07/2010
(33) Name of priority country :EPO
(86) International Application No :PCT/EP2011/003771
Filing Date :27/07/2011
(87) International Publication No :WO 2012/013343
(61) Patent of Addition to Application Number :NA
Filing Date :NA
(62) Divisional to Application Number :NA
Filing Date :NA

(71)**Name of Applicant :**
1)GRÜNENTHAL GMBH
Address of Applicant :ZieglerstraBe 6, 52078 Aachen, Germany
(72)**Name of Inventor :**
1)LINZ Klaus
2)ZEMOLKA Saskia
3)NOLTE Bert
4)SCHUNK Stefan
5)SCHICK Hans

(57) Abstract :
The invention relates to cis-tetrahydro-spirotcyclohexane-1,.1-pyriclo[3,4-b]indole)-4-amine derivatives which act on the nociceptin/ORL-1 receptor system as well as on the µ-opioid receptor system and which are distinguished in particular by selective effectiveness in the treatment of chronic pain (inter alia inflammatory pain, visceral pain, tumour pain, preferably neuropathic pain) without at the same time developing pronounced effectiveness in the case of acute, nociceptive pain.

No. of Pages : 83 No. of Claims : 16

(12) PATENT APPLICATION PUBLICATION
(21) Application No.1172/KOL/2010 A
(19) INDIA
(22) Date of filing of Application :25/10/2010
(43) Publication Date : 05/07/2013

(54) Title of the invention : DEVICE FOR VISUAL INPUT TO BRAIN THROUGH TANGIBLE PATTERN OF VIBRATING ARRAY

(51) International classification :G09B19/06
(31) Priority Document No :NA
(32) Priority Date :NA
(33) Name of priority country :NA
(86) International Application No :NA
Filing Date :NA
(87) International Publication No : NA
(61) Patent of Addition to Application Number :NA
Filing Date :NA
(62) Divisional to Application Number :NA
Filing Date :NA

(71)**Name of Applicant :**
1)BANERJEE ARNAB
Address of Applicant :ANNA VILA, 1/7,PANDIT SARADA BANERJEE ROAD, P.O.-GHOLABAZAR, SODPUR, 24 PGS(N), WEST BENGAL, PIN-700111 West Bengal India
(72)**Name of Inventor :**
1)BANERJEE ARNAB

(57) Abstract :
A Device that completely bypasses the optic nerves to produce the perception of three dimensional vision is disclosed. This visual aid uses two black and white low resolution CMOS cameras (2) in the form of a pair of goggles (1) to output four bit digital signal of pixel brightness by refreshing them (2) with inaudibly low frequency and use the data to refresh tiny electromagnetic vibrators (6, 7, 8) on two visualiser pads (4) to fit under the soles(13, 14) with accessing circuitry (Tl, T2) driven by a control panel (3) and rechargeable battery. The tangible feeling on the visualiser pads (4, 13, 14) corresponds to the live images due to plasticity of human brain.

No. of Pages : 10 No. of Claims : 9

(12) PATENT APPLICATION PUBLICATION
(19) INDIA
(22) Date of filing of Application :15/01/2013
(21) Application No.125/KOLNP/2013 A
(43) Publication Date : 05/07/2013

(54) Title of the invention : FRONT-LOADING WASHING MACHINE DOOR AND WASHING MACHINE WITH SAID DOOR

(51) International classification :D06F37/28,D06F39/14
(31) Priority Document No :P201031136
(32) Priority Date :22/07/2010
(33) Name of priority country :Spain
(86) International Application No :PCT/IB2011/052992
Filing Date :06/07/2011
(87) International Publication No :WO 2012/011007
(61) Patent of Addition to Application Number :NA
Filing Date :NA
(62) Divisional to Application Number :NA
Filing Date :NA

(71)**Name of Applicant :**
1)BSH BOSCH UND SIEMENS HAUSGERÄTE GMBH
Address of Applicant :Carl-Wery-Str. 34, 81739 M¼nchen Germany
(72)**Name of Inventor :**
1)CAUDEVILLA DE SOLA, Angel
2)CORTES PEREZ, Elena
3)LOPEZ PALACIOS, Carlos
4)ROMEO CARNICERO, Alberto

(57) Abstract :
The invention relates to a door of a front- loading washing machine comprising a door frame 2, a concave element 3 with an edge 31 connected with the door frame, and a lenticular element 4 that closes the concavity formed by the concave element forming a hollow 5 in the door 1. The door frame 2, the concave element 3 and the lenticular element 4 are made as a single piece of plastic injected by means of a gas injection process.

No. of Pages : 12 No. of Claims : 10

(12) PATENT APPLICATION PUBLICATION
(19) INDIA
(22) Date of filing of Application :19/11/2012
(21) Application No.1329/KOL/2012 A
(43) Publication Date : 05/07/2013

(54) Title of the invention : HIGH-PERFORMANCE AHCI INTERFACE.

(51) International classification :G06F13/16
(31) Priority Document No :61/580,324
(32) Priority Date :27/12/2011
(33) Name of priority country :Argentina
(86) International Application No :NA
Filing Date :NA
(87) International Publication No : NA
(61) Patent of Addition to Application Number :NA
Filing Date :NA
(62) Divisional to Application Number :NA
Filing Date :NA

(71)**Name of Applicant :**
1)APPLE INC.
Address of Applicant :1 INFINITE LOOP,CUPERTINO,CA 95014, U.S.A.
(72)**Name of Inventor :**
1)PELED, ARIE

(57) Abstract :
A method includes receiving from a host multiple commands for execution in a memory, in accordance with a storage protocol that supports processing of only a single command at any given time. At a first time, a first command is executed in the memory and data related to the first command is exchanged with the host, even though a second command, different from the first command, is selected to serve as the single command for which the processing is currently supported in accordance with the storage protocol. A progress of the first command is reported to the host at a second time, which is later than the first time, upon detecting that the first command is selected to serve as the single command for which the processing is currently supported.

No. of Pages : 24 No. of Claims : 20

(12) PATENT APPLICATION PUBLICATION
(19) INDIA
(22) Date of filing of Application :15/01/2013
(21) Application No.133/KOLNP/2013 A
(43) Publication Date : 05/07/2013

(54) Title of the invention : PROCESS FOR THE PREPARATION OF DRONEDARONE

(51) International classification :C07D307/80,A61P9/00,A61K31/343
(31) Priority Document No :P1000330
(32) Priority Date :18/06/2010
(33) Name of priority country :Hungary
(86) International Application No :PCT/HU2011/000054
Filing Date :10/06/2011
(87) International Publication No :WO 2011/158050
(61) Patent of Addition to Application Number :NA
Filing Date :NA
(62) Divisional to Application Number :NA
Filing Date :NA

(71)**Name of Applicant :**
1)SANOFI
Address of Applicant :54 RUE LA BOÉTIE F-75008 PARIS France
(72)**Name of Inventor :**
1)FRIESZ, Antal

(57) Abstract :
This invention relates to a process for the preparation of N-[2-n butyl-3-{4-[(3- dibutylamino)-propoxy] benzoyl} -1-benzofuran-5-yl]-methane-sulfonamide of formula (I) and its pharmaceutically acceptable salts, according to one of the methylsulfonyl groups of the 2-n- butyl-3-[(di-n-butylamino-3-propoxy)-benzoyl]-5- bis-(methylsulfonamido)-benzofuran of formula (II) is selectively cleaved and if desired the resulting compound of formula (I) is transformed into its salt.

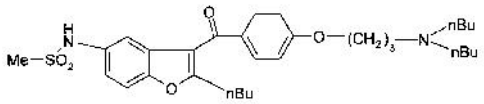

I

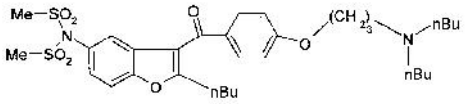

II

No. of Pages : 23 No. of Claims : 15

(12) PATENT APPLICATION PUBLICATION
(19) INDIA
(22) Date of filing of Application :16/01/2013
(21) Application No.141/KOLNP/2013 A
(43) Publication Date : 05/07/2013

(54) Title of the invention : ANTIMICROBIAL FORMULATION

(51) International classification :A23K1/17,A23K1/16,A01N61/00
(31) Priority Document No :61/377,819
(32) Priority Date :27/08/2010
(33) Name of priority country :U.S.A.
(86) International Application No :PCT/US2011/047693
Filing Date :13/08/2011
(87) International Publication No :WO 2012/027140
(61) Patent of Addition to Application Number :NA
Filing Date :NA
(62) Divisional to Application Number :NA
Filing Date :NA

(71)**Name of Applicant :**
1)ANITOX CORPORATION
Address of Applicant :1055 Progress Circle, Lawrenceville, GA 30043 (US) U.S.A.
(72)**Name of Inventor :**
1)PIMENTEL, Julio

(57) Abstract :
An anti-microbial composition for treating animal feed, comprising: 1 to 90 wt.% based on the total weight, of a Ci to C24 organic acid, 1 to 90 wt.%), based on the total weight, of trans-2-hexenal provided it constitutes at least 5 wt.% of the organic acid and aldehyde mixture, 0 to 50 wt.%) based on the total weight of terpenes, 0 to 20 wt.%) based on the total weight of a surfactant, and water.

No. of Pages : 33 No. of Claims : 20

(12) PATENT APPLICATION PUBLICATION
(19) INDIA
(22) Date of filing of Application :21/02/2011

(21) Application No.212/KOL/2011 A
(43) Publication Date : 05/07/2013

(54) Title of the invention : A PROCESS FOR THE PRODUCTION OF COLLAGEN AND BY-PRODUCTS FROM FRESH WATER FISH ORIGIN AND APPLICATIONS THEREOF

(51) International classification :C07K14/78
(31) Priority Document No :NA
(32) Priority Date :NA
(33) Name of priority country :NA
(86) International Application No :NA
Filing Date :NA
(87) International Publication No : NA
(61) Patent of Addition to Application Number :NA
Filing Date :NA
(62) Divisional to Application Number :NA
Filing Date :NA

(71)**Name of Applicant :**
1)INDIAN INSTITUTE OF TECHNOLOGY, KHARAGPUR
Address of Applicant :SPONSORED RESEARCH & INDUSTRIAL CONSULTANCY, INDIAN INSTITUTE OF TECHNOLOGY, KHARAGPUR-721302, WEST BENGAL, INDIA
(72)**Name of Inventor :**
1)PATI, FALGUNI
2)DHARA, SANTANU
3)ADHIKARI, BASUDAM

(57) Abstract :
An eco-friendly and cost-effective process for production of collagen and by-products such as gelatin, polypeptides, nano-hydroxyapatite etc. of superior properties from fresh water fish origin for biomedical application, wherein said extracted collagen and gelatin are non-immunogenic and non-toxic through In vivo animal testing. The extracted/prepared collagen and gelatin could be favourably processed into gels, nano- microfibers, sponges, beads, sheets, scaffolds, and intermingled with other polymer scaffolds and crosslinked either physically or chemically thus suitable for biomedical applications. The collagen is also useful as coating material for cell culture surfaces with improved cell adhesion properties.

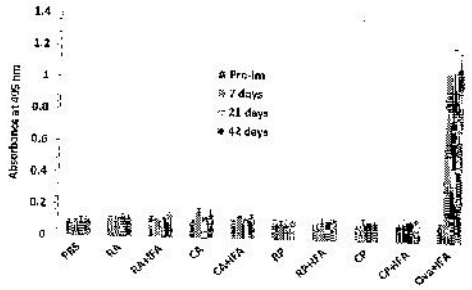

No. of Pages : 26 No. of Claims : 25

(12) PATENT APPLICATION PUBLICATION
(19) INDIA
(22) Date of filing of Application :14/01/2013

(21) Application No.120/KOLNP/2013 A
(43) Publication Date : 05/07/2013

(54) Title of the invention : PHARMACEUTICAL DOSAGE FORM COMPRISING 6' -FLUORO-(N-METHYL- OR N,N-DIMETHYL-)-4-PHENYL-4',9' -DIHYDRO-3'H- SPIRO[CYCLOHEXANE-1,1' -PYRANO[3,4,B]INDOL]-4-AMINE FOR THE TREATMENT OF NOCICEPTIVE PAIN

(51) International classification :A61K9/48,A61K47/10,A61K31/407
(31) Priority Document No :10 008 115.7
(32) Priority Date :04/08/2010
(33) Name of priority country :EPO
(86) International Application No :PCT/EP2011/003907
Filing Date :04/08/2011
(87) International Publication No :WO 2012/016697
(61) Patent of Addition to Application Number :NA
Filing Date :NA
(62) Divisional to Application Number :NA
Filing Date :NA

(71)**Name of Applicant :**
1)GRÜNENTHAL GMBH
Address of Applicant :Zieglerstrasse 6, D-52078 Aachen, Germany
(72)**Name of Inventor :**
1)GRÜNING, Nadja
2)SCHILLER, Marc
3)FRIEDRICH, Ingo
4)KIRBY, Chris
5)HEMANI, Ashish
6)BOTHMER, John
7)SCHOLZ, Andreas

(57) Abstract :
The invention relates to a pharmaceutical dosage form for administration once daily, which contains 6-fluoro-(N-methyl- or N,N-dimethyl)-4-phenyl-4,9-dihydro-3l-l-spiro[cyclohexane- 1,1-pyrano[3,4,b]indol]-4-amine or a physiologically acceptable salt thereof, for use in the treatment of nociceptive pain, preferably acute or chronic nociceptive pain.

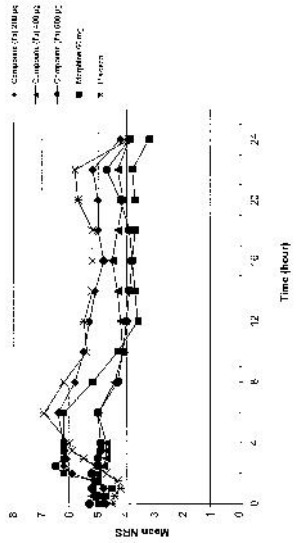

No. of Pages : 61 No. of Claims : 10

(12) PATENT APPLICATION PUBLICATION
(19) INDIA
(22) Date of filing of Application :15/01/2013

(21) Application No.136/KOLNP/2013 A
(43) Publication Date : 05/07/2013

(54) Title of the invention : METHODS AND NODES IN A WIRELESS COMMUNICATION NETWORK

(51) International classification :H04W16/00,H04W72/12,H04W76/00
(31) Priority Document No :61/358,211
(32) Priority Date :24/06/2010
(33) Name of priority country :U.S.A.
(86) International Application No :PCT/SE2010/051134
Filing Date :20/10/2010
(87) International Publication No :WO 2011/162661
(61) Patent of Addition to Application Number :NA
Filing Date :NA
(62) Divisional to Application Number :NA
Filing Date :NA

(71)**Name of Applicant :**
1)TELEFONAKTIEBOLAGET LM ERICSSON (publ)
Address of Applicant :S-164 83 Stockholm, Sweden
(72)**Name of Inventor :**
1)DAHLMAN, Erik
2)JOHANSSON, Niklas
3)PARKVALL, Stefan

(57) Abstract :
First network node 110 and method in the first network node 110 for configuring a second network node 120 to operate either in cell mode or in beam mode when communicating with a user equipment 130,140. The method comprises obtaining information for determining the operative mode of the second network node 120, comparing the obtained information with a threshold value, determining the operative mode of the second network node 120, based on the made comparison, and configuring the second network node 120 in cell mode or in beam mode in relation to the user equipment 130,140 according to the determined operative mode of the second network node 120. A user equipment 130,140 and a method in a user equipment 130,140 is also disclosed.

No. of Pages : 56 No. of Claims : 19

(12) PATENT APPLICATION PUBLICATION
(19) INDIA
(22) Date of filing of Application :20/12/2012
(21) Application No.1440/KOL/2012 A
(43) Publication Date : 05/07/2013

(54) Title of the invention : ZERO-VOLTAGE-SWITCHING (ZVS) PIEZOELECTRIC DRIVING CIRCUIT

(51) International classification :H01L41/04
(31) Priority Document No :100149933
(32) Priority Date :30/12/2011
(33) Name of priority country :Taiwan
(86) International Application No :NA
Filing Date :NA
(87) International Publication No : NA
(61) Patent of Addition to Application Number :NA
Filing Date :NA
(62) Divisional to Application Number :NA
Filing Date :NA

(71)**Name of Applicant :**
1)MIDAS WEI TRADING CO., LTD.
Address of Applicant :9F, NO. 33, SEC. 2 ROOSEVELT ROAD TAIPEI R.O.C. Taiwan
2)CHAMPION ELITE COMPANY LIMITED
(72)**Name of Inventor :**
1)WEI, TAO-CHIN
2)YUAN-PING LIU

(57) Abstract :
A zero-voltage-switching (ZVS) piezoelectric driving circuit, suitable for use in a switching type power converter. It receives an input DC voltage from a half-bridge driving circuit, and through switching of an high-side switch set and a low-side switch set of the half-bridge driving circuit, converts it to an AC voltage and provides it to a piezoelectric element to drive a load. Wherein, a shunt circuit is connected electrically between the half-bridge driving circuit and the piezoelectric element for zero-voltage- switching (ZVS). Namely, when the high-side switch set and the low-side switch set are both switched off, the shunt circuit resonates with its parasitic capacitance, so that the high-side switch set and the low-side switch set perform ZVS, thus realizing ZVS in a wide range of frequency and a large range of load.

No. of Pages : 29 No. of Claims : 10

(12) PATENT APPLICATION PUBLICATION
(21) Application No.218/KOLNP/2013 A
(19) INDIA
(22) Date of filing of Application :24/01/2013
(43) Publication Date : 05/07/2013

(54) Title of the invention : CABLE SUPPORT STRUCTURE

(51) International classification :F24J2/52
(31) Priority Document No :NA
(32) Priority Date :NA
(33) Name of priority country :NA
(86) International Application No :PCT/IT2010/000327
Filing Date :22/07/2010
(87) International Publication No :WO 2012/011135
(61) Patent of Addition to Application Number :NA
Filing Date :NA
(62) Divisional to Application Number :NA
Filing Date :NA

(71)**Name of Applicant :**
1)DI GAETANO, Alberto
Address of Applicant :Via S. Giovanni Bosco, 43, I-37047 San Bonifacio, ITALY
(72)**Name of Inventor :**
1)DI GAETANO, Alberto

(57) Abstract :
A cable support structure, used in a solar application or other applications, supporting panels or solar modules with advantage of quick cheap and simple installation, comprising a cable structure which comprises latitudinal cables, the latitudinal cables extending between two sides of an enclosure of a roof, panels or solar modules being arranged in a row on the latitudinal cables forming an array, the array being supported by the cable structure, the cable structure in turn being supported by the sides of the enclosure in such a way that weight of the array and force loads on the array are completely or partially distributed on the sides of the enclosure. The invention also regards an auto trigger hook comprising a base, a slot ware disposed on the base and a latch, wherein the slot ware provides a slot, inside the first sidewall of the slot an installation hole is formed which receives the latch, an elastic member is disposed in the installation hole presses on the latch, and the latch thus extends from the installation hole toward the second sidewall of the slot, the latch and bottom of the slot define a space for fixedly interlocking a cable or a bar or a chain, and one side of the latch which faces the opening of the slot is formed with a guiding slope.

No. of Pages : 29 No. of Claims : 18

(12) PATENT APPLICATION PUBLICATION
(19) INDIA
(22) Date of filing of Application :14/01/2013
(21) Application No.122/KOLNP/2013 A
(43) Publication Date : 05/07/2013

(54) Title of the invention : USE OF ALPHA-AMINO ETHERS FOR THE REMOVAL OF HYDROGEN SULFIDE FROM HYDROCARBONS

(51) International classification :C10G29/20,C07C7/152
(31) Priority Document No :12/836,037
(32) Priority Date :14/07/2010
(33) Name of priority country :U.S.A.
(86) International Application No :PCT/US2011/043793
Filing Date :13/07/2011
(87) International Publication No :WO 2012/009396
(61) Patent of Addition to Application Number :NA
Filing Date :NA
(62) Divisional to Application Number :NA
Filing Date :NA

(71)**Name of Applicant :**
1)NALCO COMPANY
Address of Applicant :1601 W. Diehl Road, Naperville, Illinois 60563-1198, U.S.A.
(72)**Name of Inventor :**
1)COMPTON, Dennis R.
2)STRICKLAND Byron J.
3)GARCIA, Juan, M. III

(57) Abstract :
The invention provides a method of removing hydrogen sulfide from hydrocarbon fluids. The method involves using an alpha-amino ether as a hydrogen sulfide scavenger. This allows for the introduction of an oil soluble scavenger in lieu of water-soluble scavengers.

No. of Pages : 13 No. of Claims : 4

(12) PATENT APPLICATION PUBLICATION
(21) Application No.1296/KOL/2010 A
(19) INDIA
(22) Date of filing of Application :15/11/2010
(43) Publication Date : 05/07/2013

(54) Title of the invention : AN IMPROVED ULTRASOUND IMAGING METHOD/TECHNIQUE FOR SPECKLE REDUCTION/SUPPRESSION IN AN IMPROVED ULTRA SOUND IMAGING SYSTEM

(51) International classification :A61B8/13
(31) Priority Document No :NA
(32) Priority Date :NA
(33) Name of priority country :NA
(86) International Application No :NA
Filing Date :NA
(87) International Publication No : NA
(61) Patent of Addition to Application Number :NA
Filing Date :NA
(62) Divisional to Application Number :NA
Filing Date :NA

(71)**Name of Applicant :**
1)INDIAN, INSTITUTE OF TECHNOLOGY
Address of Applicant :KHARAGPUR, PIN-721302, DIST-MIDNAPORE, STATE OF WEST BENGAL, INDIA
(72)**Name of Inventor :**
1)NANDI DEBASHIS
2)MUKHOPADHYAY, SUDIPTA

(57) Abstract :
The present invention relates to an improved ultrasound imaging method/technique for speckle reduction/suppression in an ultra sound imaging system in which scan conversion and speckle reduction is performed simultaneously in the scan conversion stage avoiding any kind of conventional interpolation. An improved method for speckle reduction in an ultrasound imaging system and an improved ultra sound imaging system for speckle reduction is provided in the present invention. The method comprises steps of receiving in a processor means raw data samples as an input comprising image signals with noises from a logarithmic amplifier, processing the received image signals for scan conversion and speckle reduction in the processor means so as to get pixel value from the raw data samples and to perform speckle reduction so as to provide speckle filtered output image.

No. of Pages : 67 No. of Claims : 19

(12) PATENT APPLICATION PUBLICATION
(19) INDIA
(22) Date of filing of Application :15/01/2013

(21) Application No.137/KOLNP/2013 A
(43) Publication Date : 05/07/2013

(54) Title of the invention : PROCESS FOR THE SYNTHESIS OF SUBSTITUTED UREA COMPOUNDS

(51) International classification	:C07D233/90,C07D401/04,C07D401/12
(31) Priority Document No	:61/368,942
(32) Priority Date	:29/07/2010
(33) Name of priority country	:U.S.A.
(86) International Application No	:PCT/PT2011/000025
Filing Date	:28/07/2011
(87) International Publication No	:WO 2012/015324
(61) Patent of Addition to Application Number	:NA
Filing Date	:NA
(62) Divisional to Application Number	:NA
Filing Date	:NA

(71)**Name of Applicant :**
1)BIAL-PORTELA & CA, S.A.
Address of Applicant :Av. Da Siderurgia Nacional, P-4745-457 S. Mamede do Coronado, Portugal
(72)**Name of Inventor :**
1)LEARMONTH, David Alexander
2)BROADBELT, Brian
3)WAHNON, Jorge Bruno Reis

(57) Abstract :
A process for preparing a substitute urea of Formula (II) or Formula (I), or a pharmaceutically acceptable salt or ester thereof, Formula (II): Formula (I): the process comprising the reaction of a carbamate of Formula (II): or formula (I): with a primary or secondary amine of the formula: R1R2NH, wherein ring A, and R1, R2, R5, V, W, X, Y and Z are as defined herein.

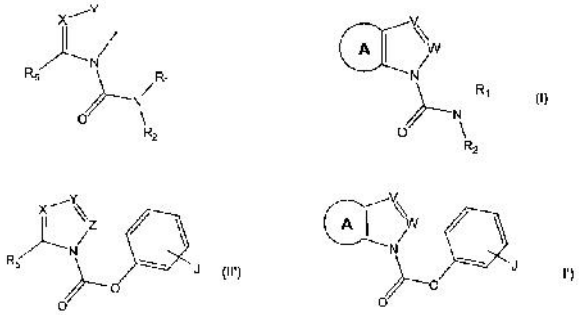

No. of Pages : 169 No. of Claims : 34

(12) PATENT APPLICATION PUBLICATION
(19) INDIA
(22) Date of filing of Application :16/01/2013
(21) Application No.145/KOLNP/2013 A
(43) Publication Date : 05/07/2013

(54) Title of the invention : DIFFERENTIAL FOR MOTOR VEHICLES

(51) International classification :F16H48/08
(31) Priority Document No :10 2010 045 451.6
(32) Priority Date :15/09/2010
(33) Name of priority country :Germany
(86) International Application No :PCT/EP2011/003811
Filing Date :29/07/2011
(87) International Publication No :WO 2012/034618
(61) Patent of Addition to Application Number :NA
Filing Date :NA
(62) Divisional to Application Number :NA
Filing Date :NA

(71)**Name of Applicant :**
1)SONA BLW PRÄZISIONSSCHMIEDE GMBH
Address of Applicant :Papenberger Str. 37, 42859 Remscheid, Germany
(72)**Name of Inventor :**
1)GROEBEL Christoph

(57) Abstract :
In a differential for motor vehicles, comprising a tubular differential housing (5), in which differential bevel gears (4) are supported on a housing-mounted carrier stud (11) and are meshed with halfshaft bevel gears (8), and wherein the differential housing (5) has two diametral halfshaft holes (9) for feeding the axle drive shafts through and two diametral stud holes (10) for accommodating the carrier stud (11), recesses (18) are provided at both ends of the differential housing (5). Said recesses describe cutouts of the differential housing (5) that approach the halfshaft holes (9) and the stud holes (10).

No. of Pages : 26 No. of Claims : 15

(12) PATENT APPLICATION PUBLICATION
(19) INDIA
(22) Date of filing of Application :28/01/2013
(21) Application No.234/KOLNP/2013 A
(43) Publication Date : 05/07/2013

(54) Title of the invention : MACHINE FOR DEEP ROLLING WHEELSET SHAFTS

(51) International classification :B24B39/04,B21H1/08,B23P9/02
(31) Priority Document No :NA
(32) Priority Date :NA
(33) Name of priority country :NA
(86) International Application No :PCT/DE2010/000771
Filing Date :01/07/2010
(87) International Publication No :WO 2012/000463
(61) Patent of Addition to Application Number :NA
Filing Date :NA
(62) Divisional to Application Number :NA
Filing Date :NA

(71)**Name of Applicant :**
1)HEGENSCHEIDT-MFD GMBH & CO. KG
Address of Applicant :Hegenscheidt-Platz, 41812 Erkelenz, Germany
(72)**Name of Inventor :**
1)HEIMANN Alfred
2)HEFFE Roland

(57) Abstract :
The invention relates to a machine, in particular a machine tool (9) for deep rolling wheelset shafts (5) for rail vehicle wheelsets with a headstock (12) and a tailstock (13) which each have prick punch points (16) for holding a wheelset shaft (5) at its respective ends, a device (16, 18, 20, 21 and 22) for driving the wheelset shaft (5), as well as tools which can be moved in directions (z, x) on the machine tool (9) for deep rolling lengthwise sections (axle zones 1 to 4) of the wheelset shaft (5), and clamping and feed devices. The tools consist of several pairs of work rollers (14,15, 23, 25, 24, 26), of which each pair is intended for deep rolling at least one axle zone (1, 2, 3, 4) of the wheelset shaft (5).

No. of Pages : 22 No. of Claims : 10

(12) PATENT APPLICATION PUBLICATION
(19) INDIA
(22) Date of filing of Application :14/01/2013
(21) Application No.108/KOLNP/2013 A
(43) Publication Date : 05/07/2013

(54) Title of the invention : HOUSING WITH A DIRECT FLOW PATH FOR HARDWARE LUBRICATION

(51) International classification :F16H57/02,B60K17/22,B60K20/00
(31) Priority Document No :61/373,465
(32) Priority Date :13/08/2010
(33) Name of priority country :U.S.A.
(86) International Application No :PCT/US2011/047215
Filing Date :10/08/2011
(87) International Publication No :WO 2012/021594
(61) Patent of Addition to Application Number :NA
Filing Date :NA
(62) Divisional to Application Number :NA
Filing Date :NA

(71)**Name of Applicant :**
1)ALLISON TRANSMISSION, INC.
Address of Applicant :4700 W. 10th Street, Indianapolis, IN 46222 U.S.A.
(72)**Name of Inventor :**
1)HAWKINS, Glen, S.
2)SCHOOLCRAFT, Brian

(57) Abstract :
The present invention provides a housing that encloses a bearing. The housing includes a side wall upon which a lubricant is dispersed. The side wall has a sloped portion and a collection area is fluidly associated with the side wall. A fluid circuit is integral with the side wall such that the fluid circuit is configured to direct the lubricant into the collection area.

No. of Pages : 18 No. of Claims : 37

(12) PATENT APPLICATION PUBLICATION
(19) INDIA
(22) Date of filing of Application :14/01/2013
(21) Application No.115/KOLNP/2013 A
(43) Publication Date : 05/07/2013

(54) Title of the invention : PROCESS FOR UTILIZING ORGANIC WASTE MATERIALS

(51) International classification :C04B7/44
(31) Priority Document No :A1036/2010
(32) Priority Date :22/06/2010
(33) Name of priority country :Austria
(86) International Application No :PCT/IB2011/001418
Filing Date :22/06/2011
(87) International Publication No :WO 2011/161525
(61) Patent of Addition to Application Number :NA
Filing Date :NA
(62) Divisional to Application Number :NA
Filing Date :NA

(71)**Name of Applicant :**
1)HOLCIM TECHNOLOGY LTD
Address of Applicant :Z¼rcherstrasse 156 CH-8645 Rapperswil-Jona Switzerland
(72)**Name of Inventor :**
1)STOFFEL, Beat
2)CRUZ, Armando

(57) Abstract :
In a process for utilizing organic waste materials, in particular cellulose-containing, moist, organic waste materials, in a clinker production process in which the waste materials are introduced as fuel and burnt in the clinker production process, the waste materials are, in a drying step, brought into concurrent contact with the hot offgases of the clinker production process and dried before introduction into the clinker production process. The drying step is carried out in a drying reactor in which the moist waste materials are passed together with the hot offgases with multiple diversion of the flow direction by 180° through a series of concentrically arranged tubes and the temperature of the hot offgases is set to a maximum value of 400°C by mixing in of ambient air and/or air from the clinker production process before the drying step.

No. of Pages : 15 No. of Claims : 10

(12) PATENT APPLICATION PUBLICATION
(19) INDIA
(22) Date of filing of Application :28/01/2013

(21) Application No.219/KOLNP/2013 A
(43) Publication Date : 05/07/2013

(54) Title of the invention : CREEP CUT-OFF CONTROL DEVICE FOR ELECTRIC VEHICLE

(51) International classification :B60L9/18,B60W10/08,B60W20/00
(31) Priority Document No :2010-150044
(32) Priority Date :30/06/2010
(33) Name of priority country :Japan
(86) International Application No :PCT/JP2011/061054
Filing Date :13/05/2011
(87) International Publication No :WO 2012/002050
(61) Patent of Addition to Application Number :NA
Filing Date :NA
(62) Divisional to Application Number :NA
Filing Date :NA

(71)**Name of Applicant :**
1)NISSAN MOTOR CO., LTD.
Address of Applicant :2, Takara-cho, Kanagawa-ku Yokohama-shi, Kanagawa 221-0023, Japan
(72)**Name of Inventor :**
1)NAKAMURA Yohei
2)KAZAMA Isamu

(57) Abstract :
A vehicle speed VSP enters a creep-cutoff-prohibiting speed region lower than V1 with a forward creep torque being outputted (t1), and then this state continues for a time duration set corresponding to a timer value NTM1 (t2). At this time, a creep cutoff is prohibited by setting a creep-cutoff-prohibition flag NFLAG at 1. A braking force becomes larger than or equal to a creep-cutoff-permitting braking- force value to satisfy a creep-cutoff permitting condition related to the braking force (t3) while a creep-cutoff permitting condition related to the vehicle speed has been satisfied because of almost zero of the vehicle speed VSP. In response thereto, the creep-cutoff permitting flag FLAG is set at 1 at t4. However, the creep toque continues to be outputted also after t4 without the creep cutoff, so that a torque reduction accompanied with strangeness feeling can be prevented from occurring due to an execution of the creep cutoff at t4.

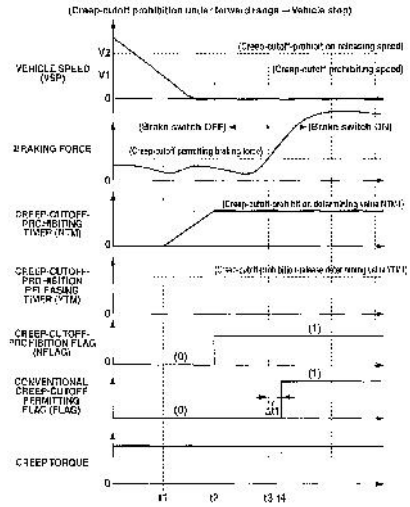

No. of Pages : 35 No. of Claims : 4

(12) PATENT APPLICATION PUBLICATION
(19) INDIA
(22) Date of filing of Application :28/01/2013
(21) Application No.235/KOLNP/2013 A
(43) Publication Date : 05/07/2013

(54) Title of the invention : TISSUE RETRACTOR ASSEMBLY

(51) International classification :A61B17/02
(31) Priority Document No :61/398,645
(32) Priority Date :29/06/2010
(33) Name of priority country :U.S.A.
(86) International Application No :PCT/US2011/042353
Filing Date :29/06/2011
(87) International Publication No :WO 2012/006153
(61) Patent of Addition to Application Number :NA
Filing Date :NA
(62) Divisional to Application Number :NA
Filing Date :NA

(71)**Name of Applicant :**
1)YALE UNIVERSITY
Address of Applicant :Two Whitney Avenue, New Haven, CT 06511 U.S.A.
(72)**Name of Inventor :**
1)RANSDEN, Jeffrey
2)WEAVER, Gregor
3)LEHMAN, Adam
4)MATA, Vincent

(57) Abstract :
A tissue retractor assembly is provided having a cannula which houses a grasper and an anchor, the grasper extended axially from the cannula, the grasper having legs for gripping tissue and a locking ring for locking the legs, and an anchor having sharpened legs, the grasper being secured and adjusted relative to the anchor by a length of suture. Another tissue retractor assembly is provided having a cannula which houses an anchor, a wire form and a grasper, the wire form a coiled spring which expands radially, and a grasper for pulling tissue through the form. A further retractor assembly is provided having a cannula which houses an anchor and a grasper, the grasper a loop of suture configured to grasp and tighten around tissue. Another tissue retractor assembly is provided having a cannula which houses a first and second graspers, the graspers defined by C-shaped clips.

No. of Pages : 48 No. of Claims : 22

(12) PATENT APPLICATION PUBLICATION
(21) Application No.116/KOLNP/2013 A
(19) INDIA
(22) Date of filing of Application :14/01/2013
(43) Publication Date : 05/07/2013

(54) Title of the invention : PHARMACEUTICAL DOSAGE FORM COMPRISING 6'-FLUORO-(N-METHYL- OR N,N-DIMETHYL-)-4-PHENYL-4',9' -DIHYDRO-3'H-SPIRO[CYCLOHEXANE-1, 1' -PYRANO[3,4,B]INDOL]-4-AMINE

(51) International classification :A61K9/20,A61K31/407
(31) Priority Document No :10 008 117.3
(32) Priority Date :04/08/2010
(33) Name of priority country :EPO
(86) International Application No :PCT/EP2011/003900
Filing Date :04/08/2011
(87) International Publication No :WO 2012/016695
(61) Patent of Addition to Application Number :NA
Filing Date :NA
(62) Divisional to Application Number :NA
Filing Date :NA

(71)**Name of Applicant :**
1)GRÜNENTHAL GMBH
Address of Applicant :Zieglerstrasse 6, D-52078 Aachen, Germany
(72)**Name of Inventor :**
1)SCHILLER Marc
2)GRÜNING Nadja
3)HEMANI Ashish

(57) Abstract :
The invention relates to a pharmaceutical dosage form for administration twice daily, once daily or less frequently, which contains 6-fluoro-(N-methyl- or N,N-dimethyl)-4-phenyl-4,9-dihydro-3H-spiro[cyclohexane-1,1-pyrano[3,4,b]indol]-4-amine or a physiologically acceptable salt thereof.

No. of Pages : 47 No. of Claims : 15

(12) PATENT APPLICATION PUBLICATION
(19) INDIA
(22) Date of filing of Application :04/12/2012
(21) Application No.1387/KOL/2012 A
(43) Publication Date : 05/07/2013

(54) Title of the invention : WASHING MACHINE

(51) International classification :H02K1/14
(31) Priority Document No :10-2011-0131963
(32) Priority Date :09/12/2011
(33) Name of priority country :Republic of Korea
(86) International Application No :NA
Filing Date :NA
(87) International Publication No : NA
(61) Patent of Addition to Application Number :NA
Filing Date :NA
(62) Divisional to Application Number :NA
Filing Date :NA

(71)**Name of Applicant :**
1)LG ELECTRONICS INC.
Address of Applicant :20 YEOUIDO-DONG, YEONGDEUNGPO-GU, SEOUL 150-721 REPUBLIC OF KOREA
(72)**Name of Inventor :**
1)LEE KILRYONG
2)KIM HEUNGGI

(57) Abstract :
A washing machine is provided. The washing machine may include a cabinet and a tub. The cabinet may definean exterior of the washing machine. The tub may be disposed inside the cabinet to hold wash water. The tub may have a cross-section on which a first length passing through a central longitudinal axis of the tub and extending from a first side to a second side along a first direction, which is substantially horizontal,may be shorter than a second length passing through the central longitudinal axis of the tub and extending from a third side to a fourth side along a second direction, which is perpendicular to the first direction.

No. of Pages : 24 No. of Claims : 24

(12) PATENT APPLICATION PUBLICATION
(19) INDIA
(22) Date of filing of Application :16/01/2013
(21) Application No.147/KOLNP/2013 A
(43) Publication Date : 05/07/2013

(54) Title of the invention : ATTACHMENT SYSTEM FOR LINES

(51) International classification :H02G3/30,F03D11/00
(31) Priority Document No :10 2010 032 686.0
(32) Priority Date :29/07/2010
(33) Name of priority country :Germany
(86) International Application No :PCT/EP2011/003782
Filing Date :28/07/2011
(87) International Publication No :WO 2012/013347
(61) Patent of Addition to Application Number :NA
Filing Date :NA
(62) Divisional to Application Number :NA
Filing Date :NA

(71)**Name of Applicant :**
1)HYDAC ACCESSORIES GMBH
Address of Applicant :HirschbachstraBe 2, 66280 Sulzbach/Saar, Germany
(72)**Name of Inventor :**
1)EVEN, Rainer
2)YAGCI, Burhan

(57) Abstract :
An attachment system for lines, in particular for cables for wind power installations. An attachment system for lines, comprising a base body (1) which can be fixed to a supporting structure and, on its lower side, has a base part (3) and at least one line bushing (5), which is open toward the upper side, which is opposite the base part (3) in order to form a respective accommodation area (23) for one or more lines, a cover part (7) which can be connected to the base body (1) as an upper closure of said base body (1) and by means of which the at least one line bushing (5) can be closed on the upper side, is characterized in that at least one spring arrangement (27,43) is provided, which in each case applies a spring force to a contact surface (29), which rests on at least one line in the respective accommodation area (23), such that the one or more lines can be fixed in a prestressed manner in the respective accommodation area (23).

No. of Pages : 22 No. of Claims : 14

(12) PATENT APPLICATION PUBLICATION
(21) Application No.221/KOLNP/2013 A
(19) INDIA
(22) Date of filing of Application :28/01/2013
(43) Publication Date : 05/07/2013

(54) Title of the invention : CLIP

(51) International classification :F16B19/10
(31) Priority Document No :2010-168562
(32) Priority Date :27/07/2010
(33) Name of priority country :Japan
(86) International Application No :PCT/JP2011/066484
Filing Date :20/07/2011
(87) International Publication No :WO 2012/014755
(61) Patent of Addition to Application Number :NA
Filing Date :NA
(62) Divisional to Application Number :NA
Filing Date :NA

(71)**Name of Applicant :**
1)NIFCO INC.
Address of Applicant :184-1, Maioka-cho, Totsuka-ku, Yokohama-shi, Kanagawa 244-8522, Japan
(72)**Name of Inventor :**
1)WATANABE Yasuhiro

(57) Abstract :
A clip includes a pin; and a grommet including an insertion hole where the pin can be inserted, and forming a plurality of leg pieces by a slit provided in a length direction of a leg portion. In the clip, the grommet can spread portions by inserting the pin into the insertion hole. A prevention portion, which prevents a foreign matter such as gravel and the like from entering in, is provided at least in either one of the pin or the grommet (for example, the pin). The prevention portion may be positioned in one portion of an insertion leg of the pin, or positioned in one portion of the leg piece of the grommet, or provided to extend along a length direction of the slit from a lower surface of a flange of the grommet.

No. of Pages : 45 No. of Claims : 10

(12) PATENT APPLICATION PUBLICATION
(19) INDIA
(22) Date of filing of Application :28/01/2013

(21) Application No.237/KOLNP/2013 A
(43) Publication Date : 05/07/2013

(54) Title of the invention : ELECTROCHEMICAL PRODUCTION OF SYNTHESIS GAS FROM CARBON DIOXIDE

(51) International classification :C25B3/00
(31) Priority Document No :12/846,002
(32) Priority Date :29/07/2010
(33) Name of priority country :U.S.A.
(86) International Application No :PCT/US2011/045534
Filing Date :27/07/2011
(87) International Publication No :WO 2012/015921
(61) Patent of Addition to Application Number :NA
Filing Date :NA
(62) Divisional to Application Number :NA
Filing Date :NA

(71)**Name of Applicant :**
1)LIQUID LIGHT, INC.
Address of Applicant :7 Deer Park Drive, Suite F, Monmouth Junction, NJ 08852 U.S.A.
(72)**Name of Inventor :**
1)SIVASANKAR, Narayanappa
2)COLE, Emily, Barton
3)TEAMEY, Kyle

(57) Abstract :
A method for electrochemical production of synthesis gas from carbon dioxide is disclosed. The method generally includes steps (A) to (C). Step (A) may bubble the carbon dioxide into a solution of an electrolyte and a catalyst in a divided electrochemical cell. The divided electrochemical cell may include an anode in a first cell compartment and a cathode in a second cell compartment. The cathode generally reduces the carbon dioxide into a plurality of components. Step (B) may establish a molar ratio of the components in the synthesis gas by adjusting at least one of (i) a cathode material and (ii) a surface morphology of the cathode. Step (C) may separate the synthesis gas from the solution.

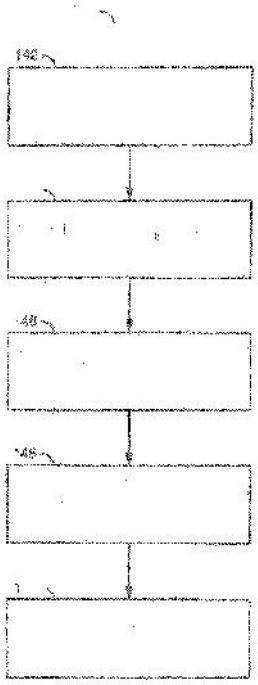

No. of Pages : 37 No. of Claims : 20

(12) PATENT APPLICATION PUBLICATION
(21) Application No.105/KOLNP/2013 A
(19) INDIA
(22) Date of filing of Application :14/01/2013
(43) Publication Date : 05/07/2013

(54) Title of the invention : WORKPIECE CUTTING APPARATUS WITH CLEANING COMPONENT

(51) International classification :B26D1/38,B26D3/10,B26D7/08
(31) Priority Document No :2010-138736
(32) Priority Date :17/06/2010
(33) Name of priority country :Japan
(86) International Application No:PCT/IB2011/0001313
Filing Date :10/06/2011
(87) International Publication No :WO 2011/158087
(61) Patent of Addition to Application Number :NA
Filing Date :NA
(62) Divisional to Application Number :NA
Filing Date :NA

(71)**Name of Applicant :**
1)NISSAN MOTOR CO., LTD.
Address of Applicant :2, Takara-cho, Kanagawa-ku Yokohama-shi, Kanagawa 221-0023, Japan
(72)**Name of Inventor :**
1)KAWADA Kenichi
2)MATSUNAE Hiroki
3)SUZUKI Toshiyuki
4)SHIJO Akihiro

(57) Abstract :
A workpiece cutting apparatus (100) that basically includes a fixed blade (4), a moving blade (1) and a cleaning component (6). The fixed blade (4) is configured to fixedly receive a workpiece (9). The moving blade (1) is moveably mounted relative to the fixed blade (4), and the moving blade (1) and the fixed blade (4) are arranged relative to each other to shear the workpiece (9) that is fixed relative to the fixed blade (4). The cleaning component (6) is arranged relative to the moving blade (1) to remove a deposit from the moving blade (1).

No. of Pages : 21 No. of Claims : 6

(12) PATENT APPLICATION PUBLICATION
(19) INDIA
(22) Date of filing of Application :14/01/2013
(21) Application No.113/KOLNP/2013 A
(43) Publication Date : 05/07/2013

(54) Title of the invention : LUBRICATING OIL COMPOSITION AND LUBRICATING OIL COMPOSITION FOR CONTINUOUSLY VARIABLE TRANSMISSION

(51) International classification	:C10M101/04,C10N20/02,C10N30/00
(31) Priority Document No	:2010-163037
(32) Priority Date	:20/07/2010
(33) Name of priority country	:Japan
(86) International Application No	:PCT/JP2011/066439
Filing Date	:20/07/2011
(87) International Publication No	:WO 2012/011492
(61) Patent of Addition to Application Number	:NA
Filing Date	:NA
(62) Divisional to Application Number	:NA
Filing Date	:NA

(71)**Name of Applicant :**
1)IDEMITSU KOSAN CO., LTD.
Address of Applicant :1-1, Marunouchi 3-chome, Chiyoda-ku, Tokyo 1008321 Japan
(72)**Name of Inventor :**
1)SEKIGUCHI Hiroki
2)TSUBOUCHI Toshiyuki
3)ODA Sumihiro
4)KOGA Hidetoshi

(57) Abstract :
Provided is a lubricating oil composition obtained by adding the longifolene represented by formula (1), that is, (1S, 3aR,4S, 8aS)-4,8,8-trimethyl-9-methylene-decahydro-1,4-methanoazulene.

No. of Pages : 23 No. of Claims : 8

(12) PATENT APPLICATION PUBLICATION
(19) INDIA
(22) Date of filing of Application :17/12/2012
(21) Application No.1425/KOL/2012 A
(43) Publication Date : 05/07/2013

(54) Title of the invention : A GANGWAY BETWEEN TWO VEHICLES OF AN ARTICULATED VEHICLE ARTICULATELY CONNECTED TO EACH OTHER

(51) International classification	:B61D17/20
(31) Priority Document No	:11 010 148.2-2422
(32) Priority Date	:22/12/2011
(33) Name of priority country	:EPO
(86) International Application No	:NA
Filing Date	:NA
(87) International Publication No	: NA
(61) Patent of Addition to Application Number	:NA
Filing Date	:NA
(62) Divisional to Application Number	:NA
Filing Date	:NA

(71)**Name of Applicant :**
1)HÜBNER GMBH
Address of Applicant :HEINRICH-HERTZ-STRASSE 2 34123 KASSEL Germany
(72)**Name of Inventor :**
1)ECKERT, MICHAEL
2)SCHUSTER, HEINZ

(57) Abstract :
A gangway between two vehicles of an articulated vehicle, articulately connected to each other, comprising a bellows and a gangway system, the bellows being divided in two bellows halves by a central frame, the central frame of the bellows being centerable approximately on the bisector, a catch device with a catch member and a catch admission for the catch member being provided for centering the central frame on the bisector, the catch member connected to the central frame being disengageably engaged with the catch admission, the catch admission being disposed on the gangway system.

No. of Pages : 17 No. of Claims : 12

(12) PATENT APPLICATION PUBLICATION
(21) Application No.193/KOLNP/2013 A
(19) INDIA
(22) Date of filing of Application :22/01/2013
(43) Publication Date : 05/07/2013

(54) Title of the invention : AN ENERGY PRODUCING AND CONSUMING ASSEMBLY AND METHOD OF OPERATING THE SAME

(51) International classification :H01M
(31) Priority Document No :10/857,629
(32) Priority Date :28/05/2004
(33) Name of priority country :U.S.A.
(86) International Application No :PCT/US2005/18139
Filing Date :23/05/2005
(87) International Publication No :WO/2005/119824
(61) Patent of Addition to Application Number :NA
Filing Date :NA
(62) Divisional to Application Number :3686/KOLNP/2006
Filed on :07/12/2006

(71)**Name of Applicant :**
1)IDATECH, LLC
Address of Applicant :63065 NE 18TH STREET, BEND, OR 97701 U.S.A.
(72)**Name of Inventor :**
1)EDLUND, DAVID, J.
2)LAVEN, ARNE
3)SCHARF, MESA

(57) Abstract :
An energy-producing and consuming assembly, comprising: a fuel source configured to provide a supply fuel stream at a supply pressure; a detector configured to detect the supply pressure; a supply fuel pressure regulator configured to receive the supply fuel stream and to produce therefrom a pressure-regulated fuel stream at a regulated pressure; a fuel cell stack configured to receive the pressure-regulated fuel stream and an oxidant stream and to produce therefrom an electric current at a production amperage to satisfy an electrical load; a load-regulating device configured to selectively control a magnitude of the electrical load; and a control system programmed to detect the supply pressure and to selectively control the production amperage based on the detected supply pressure by actively controlling the load-regulating device electrical load that is applied to the fuel cell stack, wherein the control system is programmed to at least one of increase the electrical load responsive to detecting that the supply pressure is greater than an upper threshold pressure and decrease the electrical load responsive to detecting that the supply pressure is less than a lower threshold pressure.

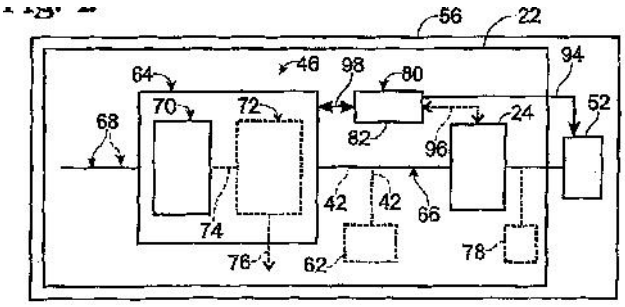

No. of Pages : 45 No. of Claims : 18

(12) PATENT APPLICATION PUBLICATION
(19) INDIA
(22) Date of filing of Application :29/01/2013
(21) Application No.240/KOLNP/2013 A
(43) Publication Date : 05/07/2013

(54) Title of the invention : PHOTOCROMIC COMPOSITION

(51) International classification :C09K9/02,G02B5/23,G02C7/10
(31) Priority Document No :2010-177704
(32) Priority Date :06/08/2010
(33) Name of priority country :Japan
(86) International Application No:PCT/JP2011/067841
Filing Date :04/08/2011
(87) International Publication No :WO 2012/018070
(61) Patent of Addition to Application Number :NA
Filing Date :NA
(62) Divisional to Application Number :NA
Filing Date :NA

(71)**Name of Applicant :**
1)Tokuyama Corporation
Address of Applicant :1-1, Mikage-cho, Shunan-shi, Yamaguchi 745-8648, Japan
(72)**Name of Inventor :**
1)HIRAREN Toshimitsu
2)MORI Katsuhiro
3)SHIMIZU Yasutomo

(57) Abstract :
Provided is a photochromic composition which can function as an adhesive layer for bonding optical sheets made from a polycarbonate resin or the like and which can yield a laminate that exhibits excellent tight adhesion, heat resistance and photochromic properties. The photochromic composition is, for example, a composition which comprises: a polyurethane-urea resin (component (A)) obtained by reacting a polyol compound (component (A1)), a polyisocyante compound (component (A2)) that has two or more isocyanato groups in the molecule, and an amino-containing compound (component (A3)) that contains two or more isocyanato-reactive groups in the molecule, with at least one of the isocyanato-reactive groups being an amino group; and a photochromic compound (component (B)). The amino-containing compound (component (A3)) is a diamine or the like.

No. of Pages : 124 No. of Claims : 25

(12) PATENT APPLICATION PUBLICATION
(19) INDIA
(22) Date of filing of Application :03/02/2011
(21) Application No.148/KOL/2011 A
(43) Publication Date : 05/07/2013

(54) Title of the invention : MAT WEAVING MACHINE

(51) International classification	:B27J1/02	(71)**Name of Applicant :**
(31) Priority Document No	:NA	**1)Y MANGI SINGH**
(32) Priority Date	:NA	Address of Applicant :KAKCHING PAZI LEIKAI, KAKCHIN, DISTRICT-THOUBAL, MANIPUR India
(33) Name of priority country	:NA	(72)**Name of Inventor :**
(86) International Application No	:NA	**1)Y MANGI SINGH**
Filing Date	:NA	
(87) International Publication No	: NA	
(61) Patent of Addition to Application Number	:NA	
Filing Date	:NA	
(62) Divisional to Application Number	:NA	
Filing Date	:NA	

(57) Abstract :
This invention relates to a weaving machine used to produce articles mainly used as household items and in particular, is used for weaving mats. More particularly, this present invention relates to a weaving machine for Kouna mat which has no shuttle in the machine. Furthermore, this invention also relates to a weaving machine in which the leg treadle in shuttle loom is replaced by a hand lever.

No. of Pages : 25 No. of Claims : 9

(12) PATENT APPLICATION PUBLICATION
(21) Application No.148/KOLNP/2013 A
(19) INDIA
(22) Date of filing of Application :16/01/2013
(43) Publication Date : 05/07/2013

(54) Title of the invention : SCREW CLOSURE WITH FLEXIBLE BAND

(51) International classification :B65D41/34
(31) Priority Document No :10 2010 039 036.4
(32) Priority Date :06/08/2010
(33) Name of priority country :Germany
(86) International Application No :PCT/EP2011/063373
Filing Date :03/08/2011
(87) International Publication No :WO 2012/017011
(61) Patent of Addition to Application Number :NA
Filing Date :NA
(62) Divisional to Application Number :NA
Filing Date :NA

(71)**Name of Applicant :**
1)BERICAP GMBH & CO. KG
Address of Applicant :KirchstraBe 5, 55257 Budenheim, Germany
(72)**Name of Inventor :**
1)KRAUTKRÄMER, G¼nter

(57) Abstract :
The present invention relates to a screw closure (10) consisting of a screw cap (1) and a tamperproof band (5), wherein the screw cap (1) has a head plate (2) with a cylindrical lateral cap surface (3), which is provided with an internal thread (4) and wherein the tamperproof band (5) has a flexible band (6) and is connected to the lower periphery of the lateral cap surface (3) via one or more easy-tear elements (7) (from Claim 1 up to the section d.g.d.). In order to create a screw closure which has a flexible band and, even in the case of relatively large tolerance deviations between the closure and container neck, still ensures that the tamperproof band can be reliably torn off, and thus provides enhanced functional reliability, it is proposed according to the invention that the flexible band (6) be designed as a continuously encircling flexible band which, distributed over its circumference, has a plurality of portions (8) which can be extended relatively easily and, therebetween, portions (9) which are less easy to extend, in relative terms.

No. of Pages : 24 No. of Claims : 14

(12) PATENT APPLICATION PUBLICATION
(19) INDIA
(22) Date of filing of Application :21/01/2013

(21) Application No.171/KOLNP/2013 A
(43) Publication Date : 05/07/2013

(54) Title of the invention : STABLE EFFERVESCENT BISPHOSPHONATE FORMULATIONS WITH RAPID SOLUBILIZATION CHARACTERISTICS

(51) International classification :A61K 9/20
(31) Priority Document No :61/419,972
(32) Priority Date :06/12/2010
(33) Name of priority country :U.S.A.
(86) International Application No :PCT/US2011/063341
Filing Date :05/12/2011
(87) International Publication No :WO 2012/078528
(61) Patent of Addition to Application Number :NA
Filing Date :NA
(62) Divisional to Application Number :NA
Filing Date :NA

(71)**Name of Applicant :**
1)EFFRX PHARMACEUTICALS SA
Address of Applicant :Route de La Corniche 9B, CH-1066 Epalinges s/Lausanne (CH) Switzerland
(72)**Name of Inventor :**
1)HAYWARD, Marshall, A.
2)SCHMIDT, Timo

(57) Abstract :
A stable effervescent tablet, granule or powder composition free from excipients that may react with an effervescing organic acid component, comprising. an effective amount of a bisphosphonate bone resorption inhibitor, an effervescing organic acid component, an effervescing base component; wherein said composition is free of polyol binders and tableting lubricants; has a loss on drying of 0.25% (m/m) or less; has a complete disintegration time of no more than 180 seconds when placed in 3 to 8 fluid ounces of water at between 5-20 °C; and said bisphosphonate is incorporated as a micronized particle or by spray drying and is completely solubdised in water within 2 minutes without stirring.

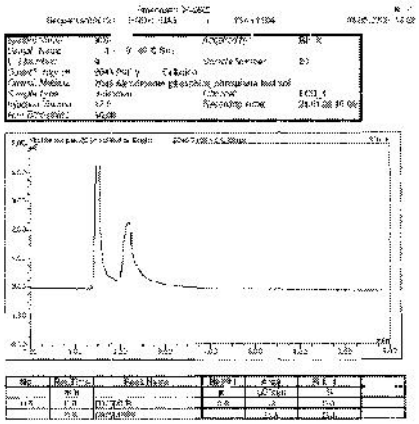

No. of Pages : 29 No. of Claims : 16

(12) PATENT APPLICATION PUBLICATION
(21) Application No.225/KOLNP/2013 A
(19) INDIA
(22) Date of filing of Application :28/01/2013
(43) Publication Date : 05/07/2013

(54) Title of the invention : USE OF MULTIPLE SHARED WAVELENGTH LOCKERS TO STABILIZE TRANSPONDERS IN A WAVELENGTH DIVISION MULTIPLEXING (WDM) NETWORK

(51) International classification :H04B10/00
(31) Priority Document No :61/362,792
(32) Priority Date :09/07/2010
(33) Name of priority country :U.S.A.
(86) International Application No :PCT/CN2011/077020
Filing Date :11/07/2011
(87) International Publication No :WO 2012/003809
(61) Patent of Addition to Application Number :NA
Filing Date :NA
(62) Divisional to Application Number :NA
Filing Date :NA

(71)**Name of Applicant :**
1)HUAWEI TECHNOLOGIES CO., LTD.
Address of Applicant :Huawei Administration Building, Bantian, Longgang District, Shenzhen, Guangdong 518129, P.R. China
(72)**Name of Inventor :**
1)SHEN, Xiao, A.
2)LEI, Hongbing
3)BAI, Yusheng

(57) Abstract :
An apparatus comprising at least one processor configured to receive a wavelength-division-multiplexed (WDM) signal from a remote node, wherein the WDM signal comprises a first channel carrying a first remotely generated signal, a second channel carrying a second remotely generated signal, and a third channel, adapt the WDM signal into a composite WDM signal by: dropping the first remotely generated signal from the first channel; adding a first locally generated signal to the first channel; and adding a second locally generated signal to the third channel, and provide wavelength locking to the first locally generated signal and the second locally generated signal without providing wavelength locking to the second remotely generated signal.

No. of Pages : 50 No. of Claims : 20

(12) PATENT APPLICATION PUBLICATION
(21) Application No.242/KOLNP/2013 A
(19) INDIA
(22) Date of filing of Application :29/01/2013
(43) Publication Date : 05/07/2013

(54) Title of the invention : FILTER ELEMENT COMPRISING MULTIFUNCTIONAL FIBROUS SMOKE-ALTERING MATERIAL

(51) International classification	:A24D 3/10,A24D 3/00
(31) Priority Document No	:12/847,228
(32) Priority Date	:30/07/2010
(33) Name of priority country	:U.S.A.
(86) International Application No	:PCT/US2011/045736
Filing Date	:28/07/2011
(87) International Publication No	:WO 2012/016051
(61) Patent of Addition to Application Number	:NA
Filing Date	:NA
(62) Divisional to Application Number	:NA
Filing Date	:NA

(71)**Name of Applicant :**
1)R. J. REYNOLDS TOBACCO COMPANY
Address of Applicant :401 North Main Street, Winston-Salem, North Carolina 27101, U.S.A.
(72)**Name of Inventor :**
1)SEBASTIAN, Andries, Don

(57) Abstract :
A filter element for use in a smoking article and providing filtration of particulate material and gaseous components of mainstream smoke is provided. The filter element includes a segment of fibrous tow comprising a plurality of individual filaments, wherein each individual filament includes a plurality of adsorbent material particles at least partially encapsulated with a removable encapsulant imbedded therein. The individual filaments may further include an outer coating that provides a plurality of reactive groups adapted for reaction with one or more components of mainstream smoke. Alternatively, the multifunctional filter element combines different fibrous filter materials, such as cellulose acetate or polyolefin filaments combined with activated carbon filaments and at least one of ion exchange filaments and catalytic filaments. A method of providing a cellulose acetate fibrous tow containing an imbedded adsorbent material is provided, wherein a plurality of encapsulated adsorbent particles are mixed with a cellulose acetate dope.

No. of Pages : 35 No. of Claims : 25

(12) PATENT APPLICATION PUBLICATION
(21) Application No.119/KOLNP/2013 A
(19) INDIA
(22) Date of filing of Application :14/01/2013
(43) Publication Date : 05/07/2013

(54) Title of the invention : USE OF ALPHA-AMINO ETHERS FOR THE REMOVAL OF MERCAPTANS FROM HYDROCARBONS

(51) International classification :C10G29/20,C07C7/20,C07C7/152
(31) Priority Document No :12/835,881
(32) Priority Date :14/07/2010
(33) Name of priority country :U.S.A.
(86) International Application No :PCT/US2011/043778
Filing Date :13/07/2011
(87) International Publication No :WO 2012/009390
(61) Patent of Addition to Application Number :NA
Filing Date :NA
(62) Divisional to Application Number :NA
Filing Date :NA

(71)**Name of Applicant :**
1)NALCO COMPANY
Address of Applicant :1601 W. Diehl Road, Naperville, Illinois 60563-1198, U.S.A.
(72)**Name of Inventor :**
1)COMPTON, Dennis R.

(57) Abstract :
The invention provides a method of removing mercaptans from hydrocarbon fluids. The method involves using an alpha-amino ether to scavenge the mercaptans. The scavenging reaction converts the mercaptans into a hydrocarbon soluble compound that mitigates the odor of the mercaptans.

No. of Pages : 16 No. of Claims : 6

(12) PATENT APPLICATION PUBLICATION
(19) INDIA
(22) Date of filing of Application :15/01/2013
(21) Application No.126/KOLNP/2013 A
(43) Publication Date : 05/07/2013

(54) Title of the invention : FLAME RETARDANT POLYMER JACKET

(51) International classification :F16L9/14
(31) Priority Document No :61/365,808
(32) Priority Date :20/07/2010
(33) Name of priority country :U.S.A.
(86) International Application No :PCT/US2011/044699
Filing Date :20/07/2011
(87) International Publication No :WO 2012/012544
(61) Patent of Addition to Application Number :NA
Filing Date :NA
(62) Divisional to Application Number :NA
Filing Date :NA

(71)**Name of Applicant :**
1)OWENS CORNING INTELLECTUAL CAPITAL, LLC
Address of Applicant :One Owens Corning Parkway, Toledo, OH 43659, U.S.A.
(72)**Name of Inventor :**
1)PENG, Ying
2)HETTLER, Neil

(57) Abstract :
A jacket configured to encase building component insulation is provided. The jacket comprises at least inner layer, an intermediate layer attached to the inner layer, and an outer layer attached to the intermediate layer. The inner layer, intermediate layer and outer layers are configured for attachment to each other with the use at least one of heat, polymeric material, and pressure. Additionally, the jacket complies with the standards of flame retardancy as provided by ASTM C1136.

No. of Pages : 27 No. of Claims : 32

(12) PATENT APPLICATION PUBLICATION
(19) INDIA
(22) Date of filing of Application :24/01/2013
(21) Application No.215/KOLNP/2013 A
(43) Publication Date : 05/07/2013

(54) Title of the invention : HEADLIGHT OPTICAL-AXIS ADJUSTMENT APPARATUS

(51) International classification :F21S8/12,B60Q1/068,F21W101/10
(31) Priority Document No :2010-145480
(32) Priority Date :25/06/2010
(33) Name of priority country :Japan
(86) International Application No :PCT/JP2011/064693
Filing Date :27/06/2011
(87) International Publication No :WO 2011/162407
(61) Patent of Addition to Application Number :NA
Filing Date :NA
(62) Divisional to Application Number :NA
Filing Date :NA

(71)**Name of Applicant :**
1)HI-LEX CORPORATION
Address of Applicant :12-28, Sakaemachi 1-chome, Takarazuka-shi Hyogo 6650845 Japan
(72)**Name of Inventor :**
1)NISHIMURA, atsushi

(57) Abstract :
There is provided a headlight angle operating device, in which when conducting pulling and returning operations of two control cables arranged in different installation paths, the relationship of operation loads of the two cables are not changed and the amounts of change in the angles of the headlights are equal to each other. The present invention uses a device for adjusting optical axes of headlights, wherein a front end of a first inner cable of a first control cable installed to one headlight and a front end of a second inner cable of a second control cable having a longer distance of installation path than the first control cable installed to another headlight are connected to the respective headlights, and the device further comprises a biasing member for drive member connected to the second coupling portion of the drive member and biasing the drive member in the direction toward front end of the inner cable.

No. of Pages : 25 No. of Claims : 4

(12) PATENT APPLICATION PUBLICATION
(21) Application No.246/KOLNP/2013 A
(19) INDIA
(22) Date of filing of Application :29/01/2013
(43) Publication Date : 05/07/2013

(54) Title of the invention : METHOD AND SYSTEM FOR GENERATING GRAPHICAL DISPLAY AND MEDIA PRESENTATION AT A CLIENT

(51) International classification :G06F
(31) Priority Document No :10/098,157
(32) Priority Date :14/03/2002
(33) Name of priority country :U.S.A.
(86) International Application No :PCT/US2003/07965
Filing Date :14/03/2003
(87) International Publication No :WO/2003/079212
(61) Patent of Addition to Application Number :NA
Filing Date :NA
(62) Divisional to Application Number :1311/KOLNP/2004
Filed on :08/09/2004

(71)**Name of Applicant :**
1)CITRIX SYSTEMS, INC.
Address of Applicant :851 W. CYPRESS CREEK ROAD, FORT LAUDERDALE, FL 33309 U.S.A.
(72)**Name of Inventor :**
1)ROBINSON, DAVID
2)LABORCZFALVI, LEE
3)SEMAAN, PIERRE
4)ROYCHOUDHRY, ANIL
5)DUURSMA, MARTIN
6)PANASYUK, ANATOLIY

(57) Abstract :
A method for generating a graphical display, the method comprises: analyzing display output via an output filter executing on a first computing device, the display output comprising bitmap display data and textual data generated by an application executing on the first computing device, and displayed on a display device connected to a second computing device; identifying, by the output filter, within the display output bitmap display data corresponding to a bitmap representation of a non-textual element; calculating, by the output filter, a check value representative of the bitmap representation of the non-textual element; determining, by the first computing device, whether the calculated check value matches a second check value on a repository of the second computing device, the second check value corresponding to the bitmap representation of the non-textual element; and if the calculated check value does not match the second check value, retrieving, by the output filter from a repository of the first computing device, a compressed format data element of the bitmap display data based on the calculated check value matching a first check value in the repository of the first computing device and transmitting, by the first computing device to the second computing device, the retrieved compressed format data element in place of the bitmap representation of the non-textual element, else, transmitting, by the first computing device to the second computing device, graphical display interface commands associated with the bitmap display data along with the textual data.

No. of Pages : 34 No. of Claims : 22

(12) PATENT APPLICATION PUBLICATION
(19) INDIA
(22) Date of filing of Application :16/01/2013
(21) Application No.140/KOLNP/2013 A
(43) Publication Date : 05/07/2013

(54) Title of the invention : COOLANT-TO-CATALYST FUEL MODIFICATION METHOD AND APPARATUS

(51) International classification :F02M27/02
(31) Priority Document No :61/364,132
(32) Priority Date :14/07/2010
(33) Name of priority country :U.S.A.
(86) International Application No :PCT/US2011/044086
Filing Date :14/07/2011
(87) International Publication No :WO 2012/009582
(61) Patent of Addition to Application Number :NA
Filing Date :NA
(62) Divisional to Application Number :NA
Filing Date :NA

(71)**Name of Applicant :**
1)TAUCHER, Scott
Address of Applicant :10118 County Road 200, Breckenridge, TX 76424-7038, U.S.A.
(72)**Name of Inventor :**
1)TAUCHER, Scott

(57) Abstract :
A catalytic apparatus for efficient pre- combustion refinement of fossil fuel in vehicular engines is disclosed, including an elongated outer metal pipe containing an elongated stainless steel inner tube of smaller diameter. The outer pipe is crimped or welded onto the inner tube to create a fuel chamber with connectors for the inflow and outflow of fossil fuel. The fuel chamber contains at least three catalytic elements each comprised of a different metal selected from the group Au,Cu, Ir,Ni,Pd,Pt,Zn and platiniridium. As engine coolant is diverted through the inner tube, excess heat is transferred to the inflowing fuel. The fuel is forced to flow in close proximity to the inner tube for maximum convection, and through the catalytic elements before flowing out through the fuel line to the fuel injectors for more efficient combustion.

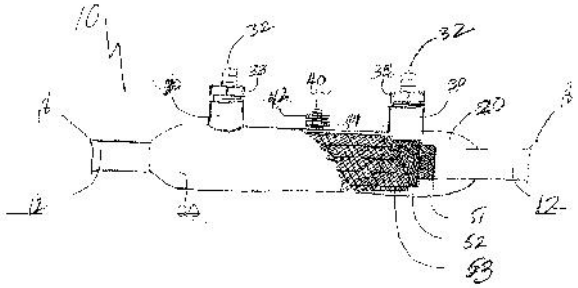

No. of Pages : 26 No. of Claims : 15

(12) PATENT APPLICATION PUBLICATION
(19) INDIA
(22) Date of filing of Application :24/01/2013
(21) Application No.209/KOLNP/2013 A
(43) Publication Date : 05/07/2013

(54) Title of the invention : GAS TURBINE ROTOR COMPRISING AN AXIALLY DISPLACEABLE TURBINE ROTOR SHAFT

(51) International classification :F01D5/02,F01D11/22,F16D1/08
(31) Priority Document No :10171951.6
(32) Priority Date :05/08/2010
(33) Name of priority country :EPO
(86) International Application No :PCT/EP2011/062410
Filing Date :20/07/2011
(87) International Publication No:WO 2012/016830
(61) Patent of Addition to Application Number :NA
Filing Date :NA
(62) Divisional to Application Number :NA
Filing Date :NA

(71)**Name of Applicant :**
1)SIEMENS AKTIENGESELLSCHAFT
Address of Applicant :Wittelsbacherplatz 2, 80333 München, Germany
(72)**Name of Inventor :**
1)BRAUN, Stefan
2)BUTZECK, Christopher
3)HAHN, Jürgen
4)SCHRÖDER, Peter
5)WIGGER, Hubertus, Michael

(57) Abstract :
The invention relates to a gas turbine rotor for a gas turbine comprising a compressor rotor shaft (100), a turbine rotor shaft (200) and a coupling device (310) frictionally connecting the two rotor shafts, wherein the coupling device (310)is designed in such a way that the friction connection also exists when the two rotor shafts (100, 200) are displaced relative to one another. In this case, the turbine rotor shaft (200) is lengthened at the end facing the compressor rotor shaft (100) in such a way that said turbine rotor shaft (200) overlaps with the compressor rotor shaft (100) in the axial direction (A) and the coupling device (300) connects this lengthened end (210) of the turbine rotor shaft (200) to the compressor rotor shaft (100) in the radial direction (R).

No. of Pages : 17 No. of Claims : 8

(12) PATENT APPLICATION PUBLICATION
(21) Application No.254/KOLNP/2013 A
(19) INDIA
(22) Date of filing of Application :30/01/2013
(43) Publication Date : 05/07/2013

(54) Title of the invention : METHOD FOR DETECTING LEAKS, SYSTEM AND MEDICAL TREATING DEVICE

(51) International classification :G01M3/28,G01M3/38,G01N9/24
(31) Priority Document No :10 2010 035 498.8
(32) Priority Date :25/08/2010
(33) Name of priority country :Germany
(86) International Application No :PCT/EP2011/004241
Filing Date :24/08/2011
(87) International Publication No :WO 2012/025225
(61) Patent of Addition to Application Number :NA
Filing Date :NA
(62) Divisional to Application Number :NA
Filing Date :NA

(71)**Name of Applicant :**
1)FRESENIUS MEDICAL CARE DEUTSCHLAND GMBH
Address of Applicant :Else-Krner-StraBe 1, 61352 Bad Homburg, Germany
(72)**Name of Inventor :**
1)WIKTOR, Christoph

(57) Abstract :
The present invention relates to a method for detecting leakages in a system (1000) conducting a medical fluid, upstream a shut-off device (7) of the system (1000), wherein the system (1000) comprises a section (100) conducting the medical fluid, the section (100) being arranged upstream the shut-off device (7), wherein the shut-off device (7) is provided or intended for interrupting or reducing an escaping or outflow of the fluid out of the section (100) into an area downstream the shut-off device (7), wherein the system (1000) further comprises at least one conveying device (5) for conveying the fluid through the section (100); wherein the method encompasses the steps of: interrupting or reducing the fluid flow through or out of the section (100) during a first conveying effort of the conveying device (5) by means of setting or adjusting, respectively, the shut- off device (7) for reaching a first conveying state in the section (100); reaching a second conveying state in the section (100) by changing the first conveying effort to a second conveying effort of the conveying device (5); emitting a signal, in particular radiation, by means of a signal emitting device into the section (100) of the system (1000) both in the first and in the second conveying state; receiving a proportion of the emitted signal, in particular the emitted radiation, leaving the section (100) by means of a signal receiving device in a first conveying state as a first proportion; receiving a proportion of the emitted signal leaving the section (100) by means of the signal receiving device in the second conveying state as a second proportion; comparing the first proportion received in the first conveying state to the second proportion of the emitted signal received in the second conveying state; and drawing a conclusion whether a leakage is present by means of an evaluation of the first proportion in relation to the second proportion. It further relates to a system as well as a medical-technical treatment apparatus. It again further relates to a digital storage medium, a computer program product and a computer program.

No. of Pages : 33 No. of Claims : 25

(12) PATENT APPLICATION PUBLICATION
(19) INDIA
(22) Date of filing of Application :14/01/2013
(21) Application No.107/KOLNP/2013 A
(43) Publication Date : 05/07/2013

(54) Title of the invention : VEHICLE START CONTROL DEVICE

(51) International classification :B60K26/02,F16D48/02
(31) Priority Document No :2010-135652
(32) Priority Date :15/06/2010
(33) Name of priority country :Japan
(86) International Application No :PCT/JP2011/060593
Filing Date :06/05/2011
(87) International Publication No :WO 2011/158570
(61) Patent of Addition to Application Number :NA
Filing Date :NA
(62) Divisional to Application Number :NA
Filing Date :NA

(71)**Name of Applicant :**
1)NISSAN MOTOR CO., LTD.
Address of Applicant :2, Takara-cho, Kanagawa-ku Yokohama-shi, Kanagawa 221-0023, Japan
(72)**Name of Inventor :**
1)SAKAGUCHI Shigeyuki
2)SHIOMI Masao
3)OMORI Masahiro

(57) Abstract :
When starting a vehicle provided with the disclosed vehicle start control device, when a gas pedal (2) is depressed with a clutch (102) disengaged and the throttle position reaches or exceeds a prescribed throttle-position threshold at which the engine speed required to start the vehicle is produced, the pedal pressure of the gas pedal (2) is increased a prescribed amount beyond a base pedal pressure. This makes it easy for a driver starting the vehicle to hold the gas pedal constant (2) at the throttle position at which the engine speed required to start is produced, thereby allowing the driver to smoothly engage the clutch (102), thus making it easy to smoothly start the vehicle.

No. of Pages : 20 No. of Claims : 6

(12) PATENT APPLICATION PUBLICATION
(19) INDIA
(22) Date of filing of Application :14/01/2013
(21) Application No.114/KOLNP/2013 A
(43) Publication Date : 05/07/2013

(54) Title of the invention : PROCESS FOR PREPARING AMINOBENZOYLBENZOFURAN DERIVATIVES

(51) International classification :C07D307/80
(31) Priority Document No :1055824
(32) Priority Date :19/07/2010
(33) Name of priority country :France
(86) International Application No :PCT/FR2011/051710
Filing Date :18/07/2011
(87) International Publication No :WO 2012/010788
(61) Patent of Addition to Application Number :NA
Filing Date :NA
(62) Divisional to Application Number :NA
Filing Date :NA

(71)**Name of Applicant :**
1)SANOFI
Address of Applicant :174, Avenue de France, F-75013 Paris France
(72)**Name of Inventor :**
1)BON, Xavier
2)BIENCOURT, Christine
3)LEROY, Corinne
4)MATEOS CARO, Julia
5)VAYRON, Philippe

(57) Abstract :
The invention relates to a process for preparing 5- aminobenzoylbenzofuran derivatives of formula (I), in which R1 represents hydrogen or an alkyl group and R2 represents hydrogen, an alkyl, alkoxy or dialkylaminoalkoxy group, by reduction of a 5-nitrobenzofuran derivative of formula (II) using a hydrogen transfer agent, in the presence of palladium-on-charcoal as catalyst and in an ether or an ether mixture as solvent.

No. of Pages : 17 No. of Claims : 16

(12) PATENT APPLICATION PUBLICATION
(21) Application No.1206/KOL/2012 A
(19) INDIA
(22) Date of filing of Application :19/10/2012
(43) Publication Date : 05/07/2013

(54) Title of the invention : SADDLE-RIDE TYPE VEHICLE

(51) International classification	:B62J17/00	(71)**Name of Applicant :**
(31) Priority Document No	:2011-288299	**1)YAMAHA HATSUDOKI KABUSHIKI KAISHA** Address of Applicant :2500, SHINGAI, IWATA-SHI, SHIZUOKA 4388501, Japan
(32) Priority Date	:28/12/2011	
(33) Name of priority country	:Japan	(72)**Name of Inventor :**
(86) International Application No	:NA	**1)TADASHI SHIMOMURA**
Filing Date	:NA	
(87) International Publication No	: NA	
(61) Patent of Addition to Application Number	:NA	
Filing Date	:NA	
(62) Divisional to Application Number	:NA	
Filing Date	:NA	

(57) Abstract :
A saddle-ride type vehicle includes a vehicle body frame, a front portion, and a support stay. The vehicle body frame includes a head pipe. The front portion includes a headlight and a front cover. The front cover covers the front of the head pipe. The headlight is attached to the front cover. The support stay includes a left securing portion, a right securing portion, and a frame securing portion; and supports the front portion. The left securing portion is disposed farther to the left than the left end of the head pipe, and is secured to the front cover. The right securing portion is disposed farther to the right than the right end of the head pipe, and is secured to the front cover. The frame securing portion is secured to the vehicle body frame.

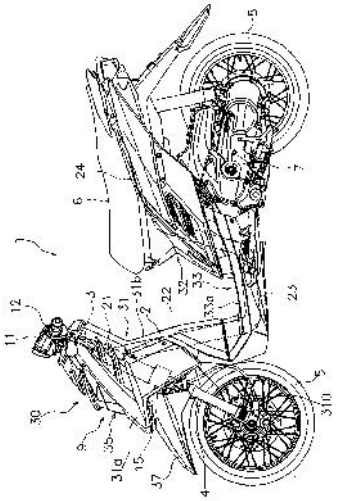

No. of Pages : 32 No. of Claims : 8

(12) PATENT APPLICATION PUBLICATION
(21) Application No.1207/KOL/2012 A
(19) INDIA
(22) Date of filing of Application :19/10/2012
(43) Publication Date : 05/07/2013

(54) Title of the invention : SADDLE-RIDE TYPE VEHICLE.

(51) International classification	:B62J17/00
(31) Priority Document No	:2011-288301
(32) Priority Date	:28/12/2011
(33) Name of priority country	:Japan
(86) International Application No	:NA
Filing Date	:NA
(87) International Publication No	: NA
(61) Patent of Addition to Application Number	:NA
Filing Date	:NA
(62) Divisional to Application Number	:NA
Filing Date	:NA

(71)**Name of Applicant :**
1)YAMAHA HATSUDOKI KABUSHIKI KAISHA
Address of Applicant :2500, SHINGAI, IWATA-SHI, SHIZUOKA 4388501, Japan
(72)**Name of Inventor :**
1)CHATWIT PANTAENG

(57) Abstract :
An object of the present invention is to provide a saddle-ride type vehicle capable of reducing the air resistance to which a retaining member is subjected during driving. A saddle- ride type vehicle is provided with a front wheel, a fender, a retaining member, and a cable member. The fender is disposed above the front wheel. The retaining member is attached to the fender, and disposed so as to project rearward from the fender. The cable member is retained by the retaining member.

No. of Pages : 42 No. of Claims : 15

(12) PATENT APPLICATION PUBLICATION
(19) INDIA
(22) Date of filing of Application :30/01/2013
(21) Application No.267/KOLNP/2013 A
(43) Publication Date : 05/07/2013

(54) Title of the invention : CELLOBIOSE PRODUCTION FROM BIOMASS

(51) International classification :C12P19/12
(31) Priority Document No :10167946.2
(32) Priority Date :30/06/2010
(33) Name of priority country :EPO
(86) International Application No :PCT/EP2011/061005
Filing Date :30/06/2011
(87) International Publication No :WO 2012/001102
(61) Patent of Addition to Application Number :NA
Filing Date :NA
(62) Divisional to Application Number :NA
Filing Date :NA

(71)**Name of Applicant :**
1)SÜD-CHEMIE IP GMBH & CO. KG
Address of Applicant :Lenbachplatz 6, 80333 München Germany
(72)**Name of Inventor :**
1)KOHL, Andreas
2)BRÜCK, Thomas
3)GERLACH, Jochen
4)ZAVREL, Michael
5)RÖCHER, Lutz
6)KRAUS, Michael

(57) Abstract :
The invention is directed to a method for the enzymatic production of cellobiose from sugar beet and other cellulose- containing biomass. Cellobiose is a disaccharide which consists of two molecules of glucose connected via a B-1,4 linkage. The process of the current invention allows for economic production of cellobiose and high yields. The process for producing cellobiose according to the invention comprises the following steps: subjecting a cellulose containing material to a cellulase treatment at a dry matter content between 7.5 and 50 % (w/w), preferably between 10 and 25% (w/w), and more preferably between 12 and 20% (w/w), followed by separating the cellobiose containing liquid phase from the solid phase.

No. of Pages : 53 No. of Claims : 19

(12) PATENT APPLICATION PUBLICATION
(21) Application No.1467/KOL/2012 A
(19) INDIA
(22) Date of filing of Application :27/12/2012
(43) Publication Date : 05/07/2013

(54) Title of the invention : METHOD FOR PRODUCING SURFACE-MODIFIED FLUORORESIN FILM/THERMOPLASTIC RESIN COMPOSITE

(51) International classification	:B32B25/08
(31) Priority Document No	:2011-289525
(32) Priority Date	:28/12/2011
(33) Name of priority country	:Japan
(86) International Application No	:NA
Filing Date	:NA
(87) International Publication No	: NA
(61) Patent of Addition to Application Number	:NA
Filing Date	:NA
(62) Divisional to Application Number	:NA
Filing Date	:NA

(71)**Name of Applicant :**
1)SUMITOMO RUBBER INDUSTRIES, LTD.
Address of Applicant :6-9, WAKINOHAMA-CHO 3-CHOME CHUO-KU, KOBE-SHI, HYOGO 651-0072 Japan
(72)**Name of Inventor :**
1)NAKANO, HIROAKI
2)YAO, EIJI

(57) Abstract :
The present invention aims at providing a composite of a surface-modified fluororesin film and a thermoplastic resin bonded to each other, and medical equipment containing the composite. A method for producing a fluororesin/thermoplastic resin composite includes roughening a surface of a fluororesin film by ion beam irradiation from an ion source, and pressure-bonding the surface-modified fluororesin film obtained in the surface roughening step and a thermoplastic resin while maintaining the thermoplastic resin in a fluid state.

No. of Pages : 36 No. of Claims : 9

(12) PATENT APPLICATION PUBLICATION
(19) INDIA
(22) Date of filing of Application :22/01/2013
(21) Application No.187/KOLNP/2013 A
(43) Publication Date : 05/07/2013

(54) Title of the invention : METHOD OF TREATMENT

(51) International classification :A61K38/40,A61K9/107,A61P13/12
(31) Priority Document No :2010902790
(32) Priority Date :24/06/2010
(33) Name of priority country :Australia
(86) International Application No :PCT/AU2011/000776
Filing Date :24/06/2011
(87) International Publication No :WO 2011/160184
(61) Patent of Addition to Application Number :NA
Filing Date :NA
(62) Divisional to Application Number :NA
Filing Date :NA

(71)**Name of Applicant :**
1)MURRAY GOULBURN CO-OPERATIVE CO. LIMITED
Address of Applicant :140 Dawson Street, Brunswick, Victoria 3056, Australia
(72)**Name of Inventor :**
1)HOBMAN, Peter
2)ROWNEY, Michelle
3)NICHOLSON, Geoff
4)SANDERS, Kerrie

(57) Abstract :
The method relates to a method of treating proteinuria comprising administering lactoferrin.

No. of Pages : 43 No. of Claims : 9

(12) PATENT APPLICATION PUBLICATION
(21) Application No.208/KOLNP/2013 A
(19) INDIA
(22) Date of filing of Application :24/01/2013
(43) Publication Date : 05/07/2013

(54) Title of the invention : METHOD FOR OPERATING A CHARGING MATERIAL PREHEATER AND CHARGING MATERIAL PREHEATER AND SMELTING FURNACE SYSTEM

(51) International classification :F27B3/18,F27D13/00,C21C5/52
(31) Priority Document No :10 2010 039 112.3
(32) Priority Date :10/08/2010
(33) Name of priority country :Germany
(86) International Application No :PCT/EP2011/062914
Filing Date :27/07/2011
(87) International Publication No:WO 2012/019913
(61) Patent of Addition to Application Number :NA
Filing Date :NA
(62) Divisional to Application Number :NA
Filing Date :NA

(71)**Name of Applicant :**
1)SIEMENS AKTIENGESELLSCHAFT
Address of Applicant :Wittelsbacherplatz 2, 80333 München, Germany
(72)**Name of Inventor :**
1)WILHELM, Uwe

(57) Abstract :
The invention relates to a method for operating a charging material preheater for a smelting oven, to a charging material preheater, and to a smelting furnace system having such a charging material preheater. The charging material preheater comprises a shaft having a vertical shaft opening comprising at least one charging opening at the upper end thereof for filling the shaft opening with fragmented charging material and comprising an emptying opening at the lower end thereof, wherein a cross section of the shaft opening expands in the direction of the emptying opening, starting from the charging opening, and wherein the charging material preheater further comprises at least one retaining device in the region of the emptying opening for temporarily holding back the charging material in the shaft. The charging material preheater allows vertical lifting of the shaft into a preheating position relative to the charging material retained in the shaft starting from a charging position, wherein at least one auxiliary opening is formed between at least one region of an inner wall of the shaft and the charging material retained in the shaft.

No. of Pages : 42 No. of Claims : 19

(12) PATENT APPLICATION PUBLICATION
(21) Application No.236/KOLNP/2013 A
(19) INDIA
(22) Date of filing of Application :28/01/2013
(43) Publication Date : 05/07/2013

(54) Title of the invention : UAV PAYLOAD MODULE CAMERA ASSEMBLY AND RETRACTION MECHANISM

(51) International classification :B64D47/00
(31) Priority Document No :61/359,809
(32) Priority Date :29/06/2010
(33) Name of priority country :U.S.A.
(86) International Application No :PCT/US2011/042376
Filing Date :29/06/2011
(87) International Publication No :WO 2012/006158
(61) Patent of Addition to Application Number :NA
Filing Date :NA
(62) Divisional to Application Number :NA
Filing Date :NA

(71)**Name of Applicant :**
1)AEROVIRONMENT, INC.
Address of Applicant :181 W. Huntington Drive, Suite 202, Monrovia, CA 91016 U.S.A.
(72)**Name of Inventor :**
1)ZWAAN , John, Peter
2)BELIK, Pavel
3)DIMOTAKIS, Manolis
4)D'AQUILA, Christopher J.

(57) Abstract :
In one possible embodiment, a UAV payload module retraction mechanism is provided including a payload pivotally attached to a housing. A biasing member is mounted to bias the payload out of the housing and a winch is attached to the payload. An elongated flexible drawing member is coupled between the housing and the winch, the elongated drawing flexible member being capable of being drawn by the winch to retract the payload within the housing.

No. of Pages : 26 No. of Claims : 21

(12) PATENT APPLICATION PUBLICATION
(19) INDIA
(22) Date of filing of Application :31/01/2013
(21) Application No.271/KOLNP/2013 A
(43) Publication Date : 05/07/2013

(54) Title of the invention : SACK AND METHOD AS WELL AS DEVICE FOR PRODUCING SACKS

(51) International classification :B31B29/00,B65D33/01,B65D30/18
(31) Priority Document No :10 2010 039 770.9
(32) Priority Date :25/08/2010
(33) Name of priority country :Germany
(86) International Application No :PCT/EP2011/064004
Filing Date :15/08/2011
(87) International Publication No :WO 2012/025413
(61) Patent of Addition to Application Number :NA
Filing Date :NA
(62) Divisional to Application Number :NA
Filing Date :NA

(71)**Name of Applicant :**
1)WINDMÖLLER & HÖLSCHER KG
Address of Applicant :M¼nsterstraBe 50, 49525 Lengerich/Westfalen, Germany
(72)**Name of Inventor :**
1)KÖHN Uwe

(57) Abstract :
The invention relates to a method for producing sacks from tube segments (1) comprising plastic material, wherein a floor rectangle (2) is placed at least at an end region about a folding line (3), forming triangular pockets (6, 7) (6, 7) and comprising flaps (4, 5) (4, 5), parts of the flaps (4, 5) (4, 5) of the floor rectangle (2) are folded back, a floor cover sheet (21) is placed at least on regions of the flaps (4, 5) of the floor rectangle (2) and/or on regions of the triangular pockets (6, 7) and connected thereto. According to the invention, a floor cover sheet (21) is used, which at least partially comprises air-permeable material.

No. of Pages : 26 No. of Claims : 23

(12) PATENT APPLICATION PUBLICATION
(19) INDIA
(22) Date of filing of Application :21/01/2013

(21) Application No.179/KOLNP/2013 A
(43) Publication Date : 05/07/2013

(54) Title of the invention : AN IN VIVO BARRIER STRUCTURE

(51) International classification :c12N
(31) Priority Document No :60/674612
(32) Priority Date :25/04/2005
(33) Name of priority country :U.S.A.
(86) International Application No :PCT/US2006/015850
Filing Date :25/04/2006
(87) International Publication No :WO/2006/116524
(61) Patent of Addition to Application Number :NA
Filing Date :NA
(62) Divisional to Application Number :4556/KOLNP/2007
Filed on :26/11/2007

(71)**Name of Applicant :**
1)MASSACHUSETTS INSTITUTE OF TECHNOLOGY
Address of Applicant :77 MASSACHUSETTS AVENUE CAMBRIDGE, MA 02142 U.S.A.
(72)**Name of Inventor :**
1)ELLIS-BEHNKE, Rutledge
2)ZHANG, Shuguang
3)SCHNEIDER, Gerald
4)SO, Kwok-Fai
5)TAY, David
6)LIANG, Yu-Xiang

(57) Abstract :
The present invention re discloses an in vivo barrier structure, comprising: self- assembled peptides comprising the amino acid sequence RADARADARADARADA (SEQ ID NO: 1), wherein an effective concentration of the peptides are self-assembled at a surgical incision site or wound site of an animal, where a bodily fluid is moving out of the surgical incision site or wound site, to form a macroscopic structure that inhibits or prevents movement of the bodily fluid out of the surgical incision site or wound site,wherein the barrier structure is formed by application of an aqueous solution of the peptides having a peptide concentration of 1.0% to 10.0% to the surgical incision site or wound site.

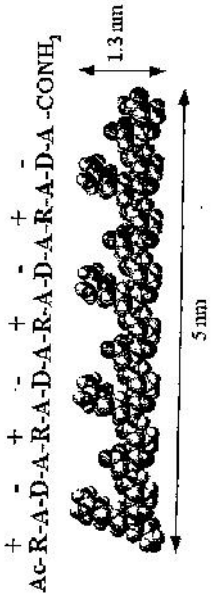

No. of Pages : 70 No. of Claims : 16

(12) PATENT APPLICATION PUBLICATION
(19) INDIA
(22) Date of filing of Application :24/01/2013
(21) Application No.213/KOLNP/2013 A
(43) Publication Date : 05/07/2013

(54) Title of the invention : SOLAR CELL MODULE AND METHOD OF PRODUCING THE SAME

(51) International classification	:H01L31/042,C08L75/06,C08L75/08
(31) Priority Document No	:2010-170918
(32) Priority Date	:29/07/2010
(33) Name of priority country	:Japan
(86) International Application No	:PCT/JP2011/066519
Filing Date	:21/07/2011
(87) International Publication No	:WO 2012/014763
(61) Patent of Addition to Application Number	:NA
Filing Date	:NA
(62) Divisional to Application Number	:NA
Filing Date	:NA

(71)**Name of Applicant :**
1)Dexerials Corporation
Address of Applicant :Gate City Osaki East Tower 8F., 1-11-2, Osaki, Shinagawa-ku, Tokyo 1410032 Japan
(72)**Name of Inventor :**
1)NISHIMOTO Masahiro
2)UCHIMI Toshiharu

(57) Abstract :
Disclosed is a solar cell module in which a reduction in the adhesive strength of the sealing resin used is suppressed even after use in a severe environment for a long period of time, in which corrosion of an electrode is prevented, and which has favorable flame resistance. The solar cell module uses, as the sealing resin, a blended polymer of a thermoplastic ester polyol polyurethane resin including an ester-based polyol unit and a thermoplastic ether polyol polyurethane resin including an ether-based polyol unit. The blending mass ratio of the thermoplastic ester polyol polyurethane resin to the thermoplastic ether polyol polyurethane resin in the blended polymer is 10:90 to 50:50. The thermoplastic ether polyol polyurethane resin includes a polyurethane resin A having flame resistance and a polyurethane resin B having: lower flame resistance but higher adhesion properties than the polyurethane resin A.

No. of Pages : 34 No. of Claims : 9

(12) PATENT APPLICATION PUBLICATION
(19) INDIA
(22) Date of filing of Application :28/01/2013
(21) Application No.229/KOLNP/2013 A
(43) Publication Date : 05/07/2013

(54) Title of the invention : SWITCHING VALVE

(51) International classification :F16K1/36
(31) Priority Document No :10008514.1
(32) Priority Date :16/08/2010
(33) Name of priority country :EPO
(86) International Application No :PCT/EP2011/004061
Filing Date :12/08/2011
(87) International Publication No :WO 2012/022449
(61) Patent of Addition to Application Number :NA
Filing Date :NA
(62) Divisional to Application Number :NA
Filing Date :NA

(71)**Name of Applicant :**
1)LEINEMANN GMBH & CO. KG
Address of Applicant :Industriestrasse 11, 38110 Braunschweig, Germany
(72)**Name of Inventor :**
1)KOSMEHL, Ralf
2)KLAUE, Uwe

(57) Abstract :
The invention relates to a switching valve having a valve seat (8) with a longitudinal axis (L) and having a valve plate (2) with a valve plate surface (6) which can be placed into a pass-through position, in which the switching valve is open, and into a closed position, in which the switching valve is closed and the valve plate (2) bears with the valve plate surface (6), in a contact region (10), against the valve seat (8), wherein the valve plate has a modulus of elasticity of at least 1000 N/mm2, which switching valve is characterized in that the valve plate (2), in the closed position, is deformed by a closing force acting thereon, in such a way that the contact region (10) of the valve plate surface (6) in the closed position forms an angle a, which differs from 0°, with the contact region (10) of the valve plate surface (6) in the pass-through position.

No. of Pages : 26 No. of Claims : 10

(12) PATENT APPLICATION PUBLICATION
(21) Application No.283/KOLNP/2013 A
(19) INDIA
(22) Date of filing of Application :01/02/2013
(43) Publication Date : 05/07/2013

(54) Title of the invention : APPARATUS FOR TIGHTENING THREADED FASTENERS

(51) International classification :F16B31/02
(31) Priority Document No :60/370,015
(32) Priority Date :02/08/2010
(33) Name of priority country :U.S.A.
(86) International Application No :PCT/IB2011/002658
Filing Date :02/08/2011
(87) International Publication No :WO 2012/017331
(61) Patent of Addition to Application Number :NA
Filing Date :NA
(62) Divisional to Application Number :NA
Filing Date :NA

(71)**Name of Applicant :**
1)JETYD CORPORATION
Address of Applicant :120 Wesley Street South Hackensack, New Jersey 07606 U.S.A.
(72)**Name of Inventor :**
1)DOLAN, Michael, F.

(57) Abstract :
According to a first aspect of the invention we provide an apparatus for torsionally coupling a threaded fastener and a torque output device including:- a first coupling member: rotatably and threadedly engagable with the threaded fastener; roo tatably and taperedly engagable with a second coupling member; non -rotatably engagable with an action portion of the torque out put device; the second coupling member non-rotatably engagable with a reaction portion of the torque output device; and wherein the first coupling member, when rotated by the action portion of the torque output device, applies a load to the threaded fastener. Advantageously apparatus with alternative geometries for torsion coupling allow for more efficiently and evenly distributed load stress distribution; higher torsion strength; and lower fastener mass and volume.

No. of Pages : 19 No. of Claims : 14

(12) PATENT APPLICATION PUBLICATION
(19) INDIA
(22) Date of filing of Application :15/01/2013
(21) Application No.128/KOLNP/2013 A
(43) Publication Date : 05/07/2013

(54) Title of the invention : METHOD AND DEVICE FOR PRODUCING AND FILLING CONTAINERS MADE OF THERMOPLASTIC PLASTIC AND CONTAINERS PRODUCED IN SUCH A WAY

(51) International classification	:B65B3/02,B29C49/42,B65D1/02
(31) Priority Document No	:10 2010 027 617.0
(32) Priority Date	:20/07/2010
(33) Name of priority country	:Germany
(86) International Application No	:PCT/EP2011/003245
Filing Date	:30/06/2011
(87) International Publication No	:WO 2012/019672
(61) Patent of Addition to Application Number	:NA
Filing Date	:NA
(62) Divisional to Application Number	:NA
Filing Date	:NA

(71)**Name of Applicant :**
1)HANSEN Bernd
Address of Applicant :Talstr. 22-30, 74429 Sulzbach-Laufen, Germany
(72)**Name of Inventor :**
1)HANSEN Bernd

(57) Abstract :
The invention relates to a method for producing and filling containers (1) made of thermoplastic plastic, in which an extruded plastic hose is inserted into an open mold having movable mold parts, mold parts forming the container (1) are closed, the hose being expanded by a pressure gradient acting on the hose in order to form the container (1), preferably in the form of a bellows, and being filled with filling material and the level of the filling material is raised by reducing container volume in the direction of the container opening a container closure (5) for the container opening being formed from the hose by closing head jaws of the mold, wherein said method is characterized in that the container (1), preferably in the region of the container closure (5), is formed in such a way that at least one section of the plastic hose remains unclosed for the time being in order to form a venting cannula (3) and in that, when the container volume is reduced, the level of the filling material is raised in such a way that at least air is displaced from the container (1) through venting cannula (3), and the venting cannula (3) is closed by closing the head jaws or by auxiliary head jaws.

No. of Pages : 18 No. of Claims : 10

(12) PATENT APPLICATION PUBLICATION
(19) INDIA
(22) Date of filing of Application :21/01/2013

(21) Application No.172/KOLNP/2013 A
(43) Publication Date : 05/07/2013

(54) Title of the invention : A MILLING INSERT

(51) International classification :B23C 5/20
(31) Priority Document No :10/686,308
(32) Priority Date :15/10/2003
(33) Name of priority country :U.S.A.
(86) International Application No :PCT/US2004/32689
Filing Date :05/10/2004
(87) International Publication No : WO/2005/039811
(61) Patent of Addition to Application Number :NA
Filing Date :NA
(62) Divisional to Application Number :1074/KOLNP/2006
Filed on :25/04/2006

(71)**Name of Applicant :**
1)TDY INDUSTRIES, INC.
Address of Applicant :1000 SIX PPG PLACE, PITTSBURGH, PA 15222 U.S.A.
(72)**Name of Inventor :**
1)FESTEAU, GILLES
2)DUFOUR, Jean-Luc
3)FANG, DANIEL, X.
4)WILLS, DAVID, J.

(57) Abstract :
A milling insert comprising a top face comprising a plurality of convex cutting edges and a plurality of nose corners, the nose comers connecting the cutting edges; a bottom face comprising a bottom edge, wherein a perimeter of the top face is greater than a perimeter of the bottom face; a plurality of side surfaces, a said side surface extending between a cutting edge and the bottom edge, wherein when each side surface is viewed in elevation, the cutting edge of the side surface includes a straight cutting edge region and a curved cutting edge region to the right of the straight cutting edge region; each side surface comprising a first clearance surface extending from a curved cutting edge region toward the bottom edge, and a first planar surface region extending from the straight cutting edge region toward the bottom edge; and a second clearance surface extending from each nose corner toward the bottom edge.

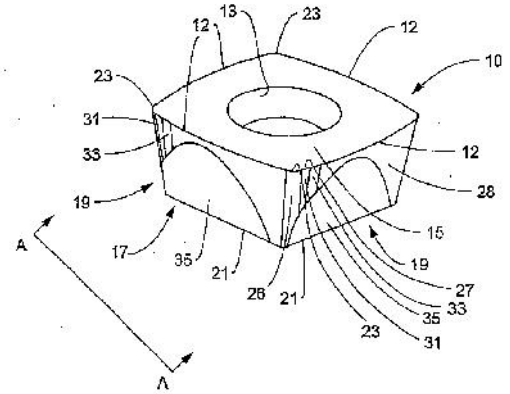

No. of Pages : 36 No. of Claims : 40

(12) PATENT APPLICATION PUBLICATION
(21) Application No.217/KOLNP/2013 A
(19) INDIA
(22) Date of filing of Application :24/01/2013
(43) Publication Date : 05/07/2013

(54) Title of the invention : UAV HAVING HERMETICALLY SEALED MODULARIZED COMPARTMENTS AND FLUID DRAIN PORTS

(51) International classification :B64C35/00
(31) Priority Document No :61/359,809
(32) Priority Date :29/06/2010
(33) Name of priority country :U.S.A.
(86) International Application No :PCT/US2011/042285
Filing Date :29/06/2011
(87) International Publication No :WO 2012/039810
(61) Patent of Addition to Application Number :NA
Filing Date :NA
(62) Divisional to Application Number :NA
Filing Date :NA

(71)**Name of Applicant :**
1)AEROVIRONMENT, INC.
Address of Applicant :181 W. Huntington Drive, Suite 202, Monrovia, California 91016 U.S.A.
(72)**Name of Inventor :**
1)BELIK, Pavel
2)SZAREK, Thomas
3)TORRES, Gabriel E.
4)FRAYE, Vernon P.

(57) Abstract :
In one possible embodiment, an amphibious unmanned aerial vehicle is provided, which includes a fuselage comprised of a buoyant material. Separators within the fuselage form separate compartments within the fuselage. Mounts associated with the compartments for securing waterproof aircraft components within the fuselage. The compartments each have drainage openings in the fuselage extending from the interior of the fuselage to the exterior of the fuselage.

No. of Pages : 19 No. of Claims : 23

(12) PATENT APPLICATION PUBLICATION
(21) Application No.249/KOLNP/2013 A
(19) INDIA
(22) Date of filing of Application :29/01/2013
(43) Publication Date : 05/07/2013

(54) Title of the invention : METHOD AND APPARATUS FOR LEAK TESTING CONTAINERS

(51) International classification :G01M3/20
(31) Priority Document No :10172402.9
(32) Priority Date :10/08/2010
(33) Name of priority country :EPO
(86) International Application No :PCT/EP2010/066058
Filing Date :25/10/2010
(87) International Publication No :WO 2011/012730
(61) Patent of Addition to Application Number :NA
Filing Date :NA
(62) Divisional to Application Number :NA
Filing Date :NA

(71)**Name of Applicant :**
1)WILCO AG
Address of Applicant :Rigackerstrasse 11, CH-5610 Wohlen, Switzerland
(72)**Name of Inventor :**
1)LEHMANN, Martin

(57) Abstract :
Close containers which are filled with a consumer product are tested on leakiness by means of mass spectrometry (10) in that an impact (AN(P)) by the consumer product (P) upon the surrounding atmosphere (A(P)) of the container to be leak tested is monitored by the mass spectrometry (10).

No. of Pages : 66 No. of Claims : 33

(12) PATENT APPLICATION PUBLICATION
(19) INDIA
(22) Date of filing of Application :01/02/2013
(21) Application No.285/KOLNP/2013 A
(43) Publication Date : 05/07/2013

(54) Title of the invention : DRY POWDER FORMULATION COMPRISING A PHOSPHODIESTERASE INHIBITOR

(51) International classification :A61K9/00,A61K31/44,A61P11/06
(31) Priority Document No :10171748.6
(32) Priority Date :03/08/2010
(33) Name of priority country :EPO
(86) International Application No :PCT/EP2011/062872
Filing Date :27/07/2011
(87) International Publication No :WO 2012/016889
(61) Patent of Addition to Application Number :NA
Filing Date :NA
(62) Divisional to Application Number :NA
Filing Date :NA

(71)**Name of Applicant :**
1)CHIESI FARMACEUTICI S.p.A.
Address of Applicant :Via Palermo, 26/A, I-43100 Parma ITALY
(72)**Name of Inventor :**
1)COCCONI, Daniela
2)SCHIARETTI, Francesca
3)BILZI, Roberto

(57) Abstract :
The invention relates to a pharmaceutical formulation in the form of inhalable dry powder comprising particles of a phosphodiesterase 4 inhibitor as active ingredient. The invention also relates to the process for the preparation thereof, and to its use in the prevention and/or treatment of a respiratory disease such as asthma and COPD.

No. of Pages : 29 No. of Claims : 22

(12) PATENT APPLICATION PUBLICATION
(19) INDIA
(22) Date of filing of Application :14/01/2013
(21) Application No.121/KOLNP/2013 A
(43) Publication Date : 05/07/2013

(54) Title of the invention : PHARMACEUTICAL DOSAGE FORM COMPRISING 6'-FLUORO-(N-METHYL- OR N, N-DIMETHYL-)-4-PHENYL-4', 9' -DIHYDRO-3'H- SPIRO[CYCLOHEXANE- 1,1' -PYRANO[3,4,B]INDOL]-4-AMINE FOR THE TREATMENT OF NEUROPATHIC PAIN

(51) International classification :A61K9/48,A61K47/10,A61K31/407
(31) Priority Document No :10 008 115.7
(32) Priority Date :04/08/2010
(33) Name of priority country :EPO
(86) International Application No :PCT/EP2011/003908
Filing Date :04/08/2011
(87) International Publication No :WO 2012/016698
(61) Patent of Addition to Application Number :NA
Filing Date :NA
(62) Divisional to Application Number :NA
Filing Date :NA

(71)**Name of Applicant :**
1)GRÜNENTHAL GMBH
Address of Applicant :Zieglerstrasse 6, D-52078 Aachen, Germany
(72)**Name of Inventor :**
1)GRÜNING, Nadja
2)SCHILLER, Marc
3)FRIEDRICH, Ingo
4)KIRBY, Chris
5)HEMANI, Ashish
6)BOTHMER, John
7)SCHOLZ, Andreas

(57) Abstract :
The invention relates to a pharmaceutical dosage form for administration once daily, which contains 6-fluoro-(N-methyl- or N,N-dimethyl)-4-phenyl-4,9-dihydro-3H-spiro[cyclohexane-1,1-pyrano[3,4,b]indol]-4-amine or a physiologically acceptable salt thereof, for use in the treatment of neuropathic pain.

No. of Pages : 68 No. of Claims : 14

(12) PATENT APPLICATION PUBLICATION
(19) INDIA
(22) Date of filing of Application :16/01/2013
(21) Application No.146/KOLNP/2013 A
(43) Publication Date : 05/07/2013

(54) Title of the invention : ELECTRODE MATERIAL FOR USE WITH A SPARK PLUG

(51) International classification :H01T13/39,H01T13/20,F02P13/00
(31) Priority Document No :61/368,860
(32) Priority Date :29/07/2010
(33) Name of priority country :U.S.A.
(86) International Application No :PCT/US2011/045767
Filing Date :28/07/2011
(87) International Publication No :WO 2012/016072
(61) Patent of Addition to Application Number :NA
Filing Date :NA
(62) Divisional to Application Number :NA
Filing Date :NA

(71)**Name of Applicant :**
1)FEDERAL-MOGUL IGNITION COMPANY
Address of Applicant :26555 Northwestern Highway, Southfield, Michigan 48033-2146, U.S.A.
(72)**Name of Inventor :**
1)MA, Shuwei

(57) Abstract :
A spark plug (10) for an internal combustion engine has a center electrode (12), a ground electrode (18) or both that includes an electrode material that is a Pt-based alloy. The electrode material may include platinum (Pt), at least one active element like aluminum (Al) or silicon (Si), and at least one high-melting point element such as ruthenium (Ru), iridium (Ir), tungsten (W), molybdenum (Mo), rhenium (Re), tantalum (Ta), niobium (Nb), chromium (Cr), or a combination thereof. In at least some of the disclosed alloys, the aluminum (Al) and/or silicon (Si) contributes to the formation of a thin protective oxide layer on a surface of the electrode material.

No. of Pages : 25 No. of Claims : 20

(12) PATENT APPLICATION PUBLICATION
(19) INDIA
(22) Date of filing of Application :28/01/2013

(21) Application No.220/KOLNP/2013 A
(43) Publication Date : 05/07/2013

(54) Title of the invention : CREEPING-CUT CONTROL APPARATUS FOR ELECTRICALLY DRIVEN VEHICLE

(51) International classification :B60L9/18,B60W10/08,B60W20/00
(31) Priority Document No :2010-150043
(32) Priority Date :30/06/2010
(33) Name of priority country :Japan
(86) International Application No :PCT/JP2011/061053
Filing Date :13/05/2011
(87) International Publication No :WO 2012/002049
(61) Patent of Addition to Application Number :NA
Filing Date :NA
(62) Divisional to Application Number :NA
Filing Date :NA

(71)**Name of Applicant :**
1)NISSAN MOTOR CO., LTD.
Address of Applicant :2, Takara-cho, Kanagawa-ku Yokohama-shi, Kanagawa 221-0023, Japan
(72)**Name of Inventor :**
1)NAKAMURA Yohei
2)KAZAMA Isamu

(57) Abstract :
A vehicle moves unintentionally in a downwardly-reverse direction with a forward creep torque being outputted as shown by a time variation of vehicle speed VSP, and a braking is applied at timing t3 in order to prevent this downward movement. In this case, the downward movement in the reverse direction is detected by sensing a relation of VSP<-V1 at timing t1, and then this state continues for a duration set corresponding to a timer value NTM1. At timing t2, a creeping- cut is prohibited by setting a creeping-cut-prohibition flag NFLAG at 1. At timing t3, the braking is started in order to prevent the reverse-directional downward movement. Thereby, at timing t5, the vehicle speed VSP becomes near 0. In response thereto, a conventional creeping-cut permitting flag FLAG is set at 1. However, the creep toque continues to be outputted also after t5 without the creeping-cut, so that a torque reduction accompanied with strangeness feeling can be prevented from occurring due to an execution of the creeping-cut at t5.

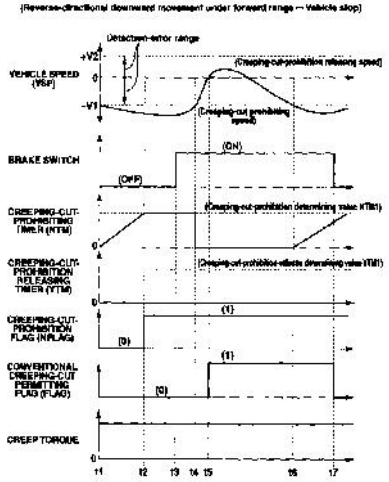

No. of Pages : 35 No. of Claims : 6

(12) PATENT APPLICATION PUBLICATION
(21) Application No.270/KOLNP/2013 A
(19) INDIA
(22) Date of filing of Application :31/01/2013
(43) Publication Date : 05/07/2013

(54) Title of the invention : LIGHT-TRANSMITTING RESIN COATING COMPOSITION, AND LIGHT-REFLECTING MEMBER AND LIGHTING APPARATUS, USING SAME

(51) International classification	:C09D133/14,C09D7/12,C09D127/12
(31) Priority Document No	:2010-179761
(32) Priority Date	:10/08/2010
(33) Name of priority country	:Japan
(86) International Application No	:PCT/JP2011/068262
Filing Date	:10/08/2011
(87) International Publication No	:WO 2012/020793
(61) Patent of Addition to Application Number	:NA
Filing Date	:NA
(62) Divisional to Application Number	:NA
Filing Date	:NA

(71)**Name of Applicant :**
1)PANASONIC CORPORATION
Address of Applicant :1006, Oaza Kadoma, Kadoma-shi, Osaka 571-8501 Japan
(72)**Name of Inventor :**
1)NOMA, Shinjiro
2)SAKO, Toshiharu
3)YAMAUCHI, Satoru

(57) Abstract :
A light-transmitting resin coating composition for use in a light reflecting member that is highly resistant to ultraviolet rays and highly cross-linked and has high gas barrier properties so as to be able to maintain high reflectivity under high temperature conditions over a long period of time. The light-transmitting resin coating composition comprises: (A) an acrylic resin having hydroxyl groups as cross-linking sites, (B) 20 to 80 parts by mass of a melamine resin per 100 parts by mass of the solid content of the acrylic resin (A); and (C) 0.1 to 10 parts by mass of an epoxy- containing silane compound or acrylic resin per 100 parts by mass of the solid content of the acrylic resin (A).

No. of Pages : 37 No. of Claims : 10

(12) PATENT APPLICATION PUBLICATION
(21) Application No.290/KOLNP/2013 A
(19) INDIA
(22) Date of filing of Application :01/02/2013
(43) Publication Date : 05/07/2013

(54) Title of the invention : HIGH CARBON HOT-ROLLED STEEL SHEET EXCELLENT IN FINE BLANKING PERFORMANCE AND MANUFACTURING METHOD FOR THE SAME

(51) International classification :C22C38/00,B21B3/00,B21B45/00
(31) Priority Document No :2010-163469
(32) Priority Date :21/07/2010
(33) Name of priority country :Japan
(86) International Application No :PCT/JP2011/066789
Filing Date :19/07/2011
(87) International Publication No :WO 2012/011598
(61) Patent of Addition to Application Number :NA
Filing Date :NA
(62) Divisional to Application Number :NA
Filing Date :NA

(71)**Name of Applicant :**
1)JFE STEEL CORPORATION
Address of Applicant :2-3, Uchisaiwai-cho 2-chome, Chiyoda-ku, Tokyo 100-0011 Japan
(72)**Name of Inventor :**
1)NAKAMURA Nobuyuki
2)KOBAYASHI Takashi
3)MEGA Tetsuya

(57) Abstract :
Provided are a high-carbon hot-rolled steel sheet which exhibits excellent fine blanking properties until the steel sheet is wound after hot-rolling and a process for producing the high carbon hot-rolled steel sheet. Specifically provided is a high carbon hot rolled steel sheet having excellent fine blanking properties, which is characterized by having a composition comprising in mass%, 0.10 040% of C, 1.0% or less of Si, 2.0% or less of Mn, 0.03% or less of P, 0.03% or less of S, 0.01% or less of N, 0.10% or less of Al, and a remainder made up by Fe and unavoidable impurities, wherein the area ratio of a proeutectoid ferrite phase in the entire structure is 10% or less and the steel sheet has a microstructure having a carbide spheroidizing ratio of 50% or more.

No. of Pages : 29 No. of Claims : 7

(12) PATENT APPLICATION PUBLICATION
(21) Application No.1422/KOL/2012 A
(19) INDIA
(22) Date of filing of Application :17/12/2012
(43) Publication Date : 05/07/2013

(54) Title of the invention : VEHICLE REAR STRUCTURE

(51) International classification :B60K15/063
(31) Priority Document No :2011-284755
(32) Priority Date :27/12/2011
(33) Name of priority country :Japan
(86) International Application No :NA
Filing Date :NA
(87) International Publication No : NA
(61) Patent of Addition to Application Number :NA
Filing Date :NA
(62) Divisional to Application Number :NA
Filing Date :NA

(71)**Name of Applicant :**
1)SUZUKI MOTOR CORPORATION
Address of Applicant :300 TAKATSUKA-CHO, MINAMI-KU,HAMAMATSU, SHIZUOKA, 432-8611 Japan
(72)**Name of Inventor :**
1)SAKAZAKI SHINYA

(57) Abstract :
A vehicle rear structure that has a simple structure with which weight and cost are kept low and that is capable of reinforcing a roof and a side body of mainly a hatchback vehicle is provided. A vehicle rear structure 100 includes a roof 106, a side body 108, and a reinforcing member 112, and the roof 106 and the side body 103 have a roof vertical wall part 106b and a side body vertical wall part 108c,respectively, on the rear side of a vehicle, and the roof vertical wall part 106b and the side body vertical wall part 108c partially overlap with each other. The roof 106 further has a covering part 106c that extends in a curved manner toward the rear of the vehicle from the roof vertical wall part 106b. The reinforcing member 112 is curved along an upper surface part 106a, the roof vertical wall part 106b, and the covering part 106c of the roof 106, is in contact therewith, and is welded thereto. Also, the reinforcing member 112 is welded to the side body vertical wall part 108c on the outer side in the vehicle width direction, welded to the roof vertical wall part 106b and the side body vertical wall part 108c in the center in the vehicle width direction,and welded to the roof vertical wall part 106b on the inner side in the vehicle width direction.

No. of Pages : 17 No. of Claims : 3

(12) PATENT APPLICATION PUBLICATION
(19) INDIA
(22) Date of filing of Application :22/01/2013

(21) Application No.192/KOLNP/2013 A
(43) Publication Date : 05/07/2013

(54) Title of the invention : WELDING ASSEMBLY AND METHOD

(51) International classification :B23K11/00
(31) Priority Document No :12/820,596
(32) Priority Date :22/06/2010
(33) Name of priority country :U.S.A.
(86) International Application No :PCT/US2011/038993
Filing Date :03/06/2011
(87) International Publication No :WO 2011/162928
(61) Patent of Addition to Application Number :NA
Filing Date :NA
(62) Divisional to Application Number :NA
Filing Date :NA

(71)**Name of Applicant :**
1)INNOVATIVE WELD SOLUTIONS LTD.
Address of Applicant :4030 North Emerald Court, Beavercreek, OH 45430 U.S.A.
(72)**Name of Inventor :**
1)ANANTHANARAYANAN Venkatasubramanian

(57) Abstract :
A welding assembly including a current generator, an electrode electrically coupled to the current generator, the electrode including a first engagement surface, and a workpiece including at least two members, wherein at least one of the members includes a second engagement surface defines a recess in the second engagement surface, and is electrically coupled to the current generator.

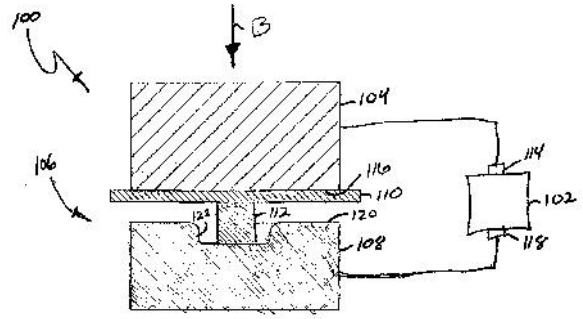

No. of Pages : 31 No. of Claims : 20

(12) PATENT APPLICATION PUBLICATION
(19) INDIA
(22) Date of filing of Application :28/01/2013
(21) Application No.222/KOLNP/2013 A
(43) Publication Date : 05/07/2013

(54) Title of the invention : BRUSH CUTTER

(51) International classification :A01D34/52,A01D34/73,B23D61/06
(31) Priority Document No :61/344,453
(32) Priority Date :26/07/2010
(33) Name of priority country :U.S.A.
(86) International Application No :PCT/CA2011/000849
Filing Date :26/07/2011
(87) International Publication No :WO 2012/012873
(61) Patent of Addition to Application Number :NA
Filing Date :NA
(62) Divisional to Application Number :NA
Filing Date :NA

(71)**Name of Applicant :**
1)DENIS, Gilles
Address of Applicant :333, ave Champlain, Phillipsburg, Québec J0J 1E0, Canada
2)DENIS, Laurent
(72)**Name of Inventor :**
1)DENIS, Gilles
2)DENIS, Laurent

(57) Abstract :
A cutting tooth having a blade like cutting section, a mounting section extending down from the bottom surface of the cutting section with at least a top portion of the mounting section adjacent the cutting section defining a width smaller than that of the cutting section the mounting section having laterally extending retaining members spaced from the cutting section and adapted to be retained in a mounting block, at least a quarter of the length of the cutting section extending past a front of the mounting section, with the front end of the cutting section terminating in a cutting edge.

No. of Pages : 19 No. of Claims : 23

(12) PATENT APPLICATION PUBLICATION
(19) INDIA
(22) Date of filing of Application :30/01/2013
(21) Application No.257/KOLNP/2013 A
(43) Publication Date : 05/07/2013

(54) Title of the invention : INSIDE-OUT FLOW FILTER WITH PRESSURE RECOVERY

(51) International classification :B01D46/00
(31) Priority Document No :61/476,903
(32) Priority Date :19/04/2011
(33) Name of priority country :U.S.A.
(86) International Application No :PCT/US2012/021467
Filing Date :17/01/2012
(87) International Publication No :WO 2012/145050
(61) Patent of Addition to Application Number :NA
Filing Date :NA
(62) Divisional to Application Number :NA
Filing Date :NA

(71)**Name of Applicant :**
1)CUMMINS FILTRATION IP, INC.
Address of Applicant :1400-73rd Avenue NE, Minneapolis, MN 55432, U.S.A.
(72)**Name of Inventor :**
1)Peter K. HERMAN
2)Bradley A. SMITH
3)Benjamin L. SCHECKEL

(57) Abstract :
In an inside-out flow filter, a transition pressure recovery member is provided at the inlet and has structured contoured guide surfaces guiding fluid flow therealong into the hollow interior of an annular filter element to minimize transition pressure loss from the inlet to the hollow interior. The transition pressure recovery member includes transition flow deceleration surfaces gradually decelerating flow of fluid into the hollow interior and minimizing pressure drop.

No. of Pages : 17 No. of Claims : 29

(12) PATENT APPLICATION PUBLICATION
(21) Application No.293/KOLNP/2013 A
(19) INDIA
(22) Date of filing of Application :01/02/2013
(43) Publication Date : 05/07/2013

(54) Title of the invention : A METHOD OF ENCODING A STEREO SIGNAL TO OBTAIN A MONO OUTPUT SIGNAL AND A STEREO PARAMETER SET

(51) International classification :G10L-19/00
(31) Priority Document No :0301273-9
(32) Priority Date :30/04/2003
(33) Name of priority country :Sweden
(86) International Application No :PCT/EP2004/004607
Filing Date :30/04/2004
(87) International Publication No :WO 2004/097794
(61) Patent of Addition to Application Number :NA
Filing Date :NA
(62) Divisional to Application Number :2162/KOLNP/2005
Filed on :28/10/2005

(71)**Name of Applicant :**
1)DOLBY INTERNATIONAL AB
Address of Applicant :APOLLO BUILDING, 3E HERIKERBERGWEG 1-35, 1101 CN, AMSTERDAM ZUID-OOST, THE NETHERLANDS
(72)**Name of Inventor :**
1)ENGDEGARD, Jonas
2)VILLEMOES, LARS

(57) Abstract :
The invention relates to a method of encoding a stereo signal to obtain a mono output signal and a stereo parameter set, comprising calculating the mono signal with a calculating means by combining a left and a right channel of the stereo signals; generating a first stereo parameter set with a generating means (403) utilizing a portion of the left channel and a portion of the right channel, the portion starting at a first time border; determining with means (401,402) a validity of the first stereo parameter set for subsequent portions of the left channel and the right channel, by generating a second time border; conducting the step of generating, when it is determined that the stereo parameter set is not valid anymore so that a second stereo parameter set for portions of the left and right signals starting at the second time border is generated; and outputting with outputting means the mono signal and the first stereo parameter set and the first time border associated with the first parameter set, and the second stereo parameter set: and the second time border associated with the second stereo parameter set; wherein said means for calculating, the means (403) for generating, the means (401,402) for determining, or the means for outputting comprise hardware implementation.

No. of Pages : 32 No. of Claims : 3

(12) PATENT APPLICATION PUBLICATION
(21) Application No.233/KOLNP/2013 A
(19) INDIA
(22) Date of filing of Application :28/01/2013
(43) Publication Date : 05/07/2013

(54) Title of the invention : MEASURING CASSETTE AND MEASURING DEVICE FOR THE DETECTION OF TARGET MOLECULES IN A LIQUID SAMPLE BY MEASUREMENT OF FLUORESCENCE EMISSION AFTER EXCITATION IN AN EVANESCENT FIELD

(51) International classification :G01N21/05,G01N21/64
(31) Priority Document No :10 2010 038 431.3
(32) Priority Date :26/07/2010
(33) Name of priority country :Germany
(86) International Application No :PCT/EP2011/062363
Filing Date :19/07/2011
(87) International Publication No :WO 2012/016824
(61) Patent of Addition to Application Number :NA
Filing Date :NA
(62) Divisional to Application Number :NA
Filing Date :NA

(71)**Name of Applicant :**
1)DIASYS DIAGNOSTIC SYSTEMS GMBH
Address of Applicant :Alte StraBe 9, 65558 Holzheim, Germany
(72)**Name of Inventor :**
1)SCHENK Roland

(57) Abstract :
The present invention relates to an interchangeable disposable measuring cassette for insertion into a measuring apparatus for detecting target molecules in a liquid sample by measuring fluorescence emission, wherein the measuring cassette has a flow measurement cell in which an excitation radiation provided by the measuring apparatus produces an evanescent field in the liquid sample beyond a boundary layer for the liquid sample and the measurement cell. In order to be better able to ensure that no sample liquid can cross from the measurement cell into the measuring apparatus, in particular to the fluorescence detector or to the excitation source, the invention proposes that the measuring cassette comprises a body consisting of an optically transparent material and a base in contact with the underside of the body, wherein the measurement cell is formed by a cutout which is provided in the body, in the base or both in the body and in the base, wherein the areas on which the body and the base are on top of one another around this cutout are connected to one another directly and in fluid-tight fashion by means of laser welding.

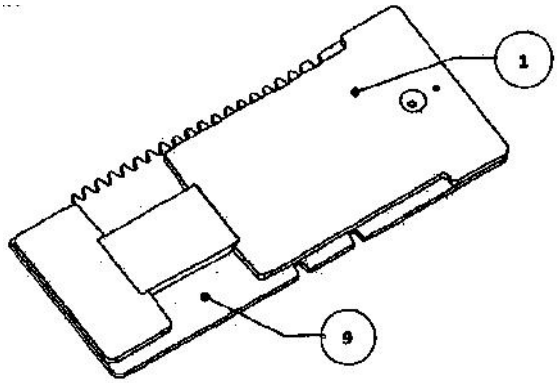

No. of Pages : 26 No. of Claims : 15

(12) PATENT APPLICATION PUBLICATION
(21) Application No.251/KOLNP/2013 A
(19) INDIA
(22) Date of filing of Application :29/01/2013
(43) Publication Date : 05/07/2013

(54) Title of the invention : METHOD FOR COMPLETING CHEMICAL CLEANING OF A POWER PLANT

(51) International classification :B08B9/08,F22B37/52,F28G9/00
(31) Priority Document No :10172770.9
(32) Priority Date :13/08/2010
(33) Name of priority country :EPO
(86) International Application No :PCT/EP2011/057590
Filing Date :11/05/2011
(87) International Publication No:WO 2012/019793
(61) Patent of Addition to Application Number :NA
Filing Date :NA
(62) Divisional to Application Number :NA
Filing Date :NA

(71)**Name of Applicant :**
1)SIEMENS AKTIENGESELLSCHAFT
Address of Applicant :Wittelsbacherplatz 2, 80333 München, Germany
(72)**Name of Inventor :**
1)KUHNKE Klaus-Dieter

(57) Abstract :
The invention relates to a method for cleaning at least one part of a water-steam circuit (13, 14, 15, 16) of a power plant (1, 2), wherein a cleaning solution is introduced into the part to be cleaned and is subsequently drained, wherein during or immediately after draining of the cleaning solution, steam for rinsing is supplied to the part to be cleaned at at least one high point of the part to be cleaned and at least one low point drain (17) in the part to be cleaned is opened or remains open and steam is supplied until the steam escapes from the low point drain (17) and in the case of a plurality of low point drains (17), those low point drains (17) at which steam escapes are closed and steam is supplied until steam has escaped from all low point drains (17), whereupon the steam supply is closed and all low point drains (17) are reopened. The invention further relates to the use of the method in a steam power plant, in a gas and steam turbine plant and in particular in a water-steam circuit of a heat recovery steam generator (2).

No. of Pages : 14 No. of Claims : 8

(12) PATENT APPLICATION PUBLICATION
(19) INDIA
(22) Date of filing of Application :01/02/2013
(21) Application No.288/KOLNP/2013 A
(43) Publication Date : 05/07/2013

(54) Title of the invention : THE RECOVERY OF ALUMINA TRIHYDRATE DURING THE BAYER PROCESS USING CROSS-LINKED POLYSACCHARIDES

(51) International classification :C01F7/06,C01F7/47,B01D21/01
(31) Priority Document No :12/852,910
(32) Priority Date :09/08/2010
(33) Name of priority country :U.S.A.
(86) International Application No :PCT/US2011/046579
Filing Date :04/08/2011
(87) International Publication No:WO 2012/021375
(61) Patent of Addition to Application Number :NA
Filing Date :NA
(62) Divisional to Application Number :NA
Filing Date :NA

(71)**Name of Applicant :**
1)NALCO COMPANY
Address of Applicant :1601 W. Diehl Road, Naperville, Illinois 60563-1198, U.S.A.
(72)**Name of Inventor :**
1)WANG Jing
2)BODE Heinrich E.
3)LI Xiaojin Harry

(57) Abstract :
The invention provides methods and compositions for improving the production of alumina hydrate. The invention involves adding one or more polysaccharides to liquor or slurry in the fluid circuit of the production process. The one or more polysaccharides can be a cross linked polysaccharide (such as cross linked dextran or cross linked dihydroxypropyl cellulose). The various polysaccharides can impart a number of advantages including at least some of: greater flocculation effectiveness, increasing the maximum effective dosage, faster settling rate. The production process can be a Bayer process.

No. of Pages : 23 No. of Claims : 14

(12) PATENT APPLICATION PUBLICATION
(21) Application No.308/KOL/2011 A
(19) INDIA
(22) Date of filing of Application :09/03/2011
(43) Publication Date : 05/07/2013

(54) Title of the invention : USE OF DOXYCYCLINE TO PREVENT AND REVERSE AIRWAY

(51) International classification :A61K31/65
(31) Priority Document No :NA
(32) Priority Date :NA
(33) Name of priority country :NA
(86) International Application No :NA
Filing Date :NA
(87) International Publication No : NA
(61) Patent of Addition to Application Number :NA
Filing Date :NA
(62) Divisional to Application Number :NA
Filing Date :NA

(71)**Name of Applicant :**
1)PARTHASARATHI BHATTACHARYYA
Address of Applicant :AK-46, SECTOR II, SALT LAKE CITY, KOLKATA 700091, West Bengal India
(72)**Name of Inventor :**
1)PARTHASARATHI BHATTACHARYYA

(57) Abstract :
Use of doxycycline to prevent and reverse airway remodeling and narrowing in obstructive airway disease as asthma COPD.

No. of Pages : 8 No. of Claims : 4

(12) PATENT APPLICATION PUBLICATION
(21) Application No.112/KOLNP/2013 A
(19) INDIA
(22) Date of filing of Application :14/01/2013
(43) Publication Date : 05/07/2013

(54) Title of the invention : C-MET MODULATOR PHARMACEUTICAL COMPOSITIONS

(51) International classification :A61K9/20,A61K31/47
(31) Priority Document No :61/365,253
(32) Priority Date :16/07/2010
(33) Name of priority country :U.S.A.
(86) International Application No :PCT/US2011/044378
Filing Date :18/07/2011
(87) International Publication No :WO 2012/009722
(61) Patent of Addition to Application Number :NA
Filing Date :NA
(62) Divisional to Application Number :NA
Filing Date :NA

(71)**Name of Applicant :**
1)EXELIXIS, INC.
Address of Applicant :210 East Grand Avenue South San Francisco, CA 94080 U.S.A.
(72)**Name of Inventor :**
1)WILSON, Jo Ann

(57) Abstract :
Pharmaceutical compositions and unit dosage forms comprising Compound (I) are disclosed.

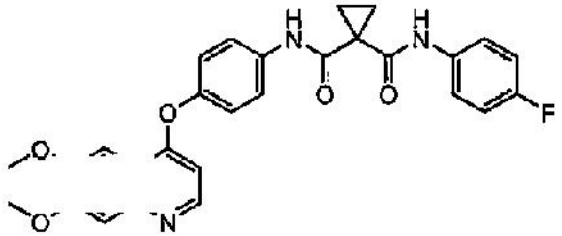

No. of Pages : 38 No. of Claims : 30

(12) PATENT APPLICATION PUBLICATION
(21) Application No.17/KOLNP/2013 A
(19) INDIA
(22) Date of filing of Application :02/01/2013
(43) Publication Date : 05/07/2013

(54) Title of the invention : ADSORBENT FOR ORAL ADMINISTRATION, METHOD FOR PRODUCING SAME, AND DRUG USING SAME

(51) International classification :A61K33/44,A61P13/12,A61P39/02
(31) Priority Document No :2010-173567
(32) Priority Date :02/08/2010
(33) Name of priority country :Japan
(86) International Application No :PCT/JP2011/064136
Filing Date :21/06/2011
(87) International Publication No :WO 2012/017748
(61) Patent of Addition to Application Number :NA
Filing Date :NA
(62) Divisional to Application Number :NA
Filing Date :NA

(71)**Name of Applicant :**
1)ASAHI ORGANIC CHEMICALS INDUSTRY CO., LTD.
Address of Applicant :5955, Nakanose-cho 2-chome, Nobeoka-shi, Miyazaki 882-8688, Japan
(72)**Name of Inventor :**
1)MATSUMOTO, Yasuhiro

(57) Abstract :
To provide an adsorbent for oral administration which has a high ability to adsorb indoxyl sulfate, indoleacetic acid, and indole, a method capable of easily and advantageously producing the same, and a drug using the same. The adsorbent for oral administration is obtained from spherical active carbon particles formed by carbonizing and activating spherical furfuryl alcohol resin particles obtained by resinifying and curing furfuryl alcohol through a self-condensation reaction.

No. of Pages : 25 No. of Claims : 15

(12) PATENT APPLICATION PUBLICATION
(19) INDIA
(22) Date of filing of Application :24/01/2013
(21) Application No.214/KOLNP/2013 A
(43) Publication Date : 05/07/2013

(54) Title of the invention : ENGINE AND STRADDLE TYPE VEHICLE

(51) International classification :F02B67/06,F16H7/08
(31) Priority Document No :JP2011-114003
(32) Priority Date :20/05/2011
(33) Name of priority country :Japan
(86) International Application No :PCT/JP2012/061822
Filing Date :09/05/2012
(87) International Publication No :WO 2012/160969
(61) Patent of Addition to Application Number :NA
Filing Date :NA
(62) Divisional to Application Number :NA
Filing Date :NA

(71)**Name of Applicant :**
1)YAMAHA HATSUDOKI KABUSHIKI KAISHA
Address of Applicant :2500 Shingai, Iwata-shi, Shizuoka, 438-8501, Japan
(72)**Name of Inventor :**
1)INOMORI Toshinori
2)NAKAJIMA Akitoshi

(57) Abstract :
An arrangement is provided using a blade tensioner to tension a cam chain, where the cam chain can be easily attached to an engine having a cylinder body that does not have a side that can be opened. A tensioner (158) has a leaf spring (166) and a blade shoe (168) that supports the leaf spring (166) and may contact the cam chain (154) in a chain room. An engine (44) includes a bolt (164) that can be inserted into a support hole (250) formed in the tensioner (158) and can swingably support the tensioner (158), and a support member (170) that can contact a contact portion (178) of the blade shoe (168) to support the tensioner (158). The bolt (164) is provided in a crankcase (84). The support member (170) is provided on a head cover (130) and supports the tensioner (158) in such a way that the contact portion (178) is slidable.

No. of Pages : 33 No. of Claims : 13

(12) PATENT APPLICATION PUBLICATION
(19) INDIA
(22) Date of filing of Application :29/01/2013
(21) Application No.245/KOLNP/2013 A
(43) Publication Date : 05/07/2013

(54) Title of the invention : A METHOD FOR GENERATING A GRAPHICAL DISPLAY FOR A REMOTE TERMINAL SESSION

(51) International classification :G06F
(31) Priority Document No :10/098,157
(32) Priority Date :14/03/2002
(33) Name of priority country :U.S.A.
(86) International Application No :PCT/US2003/07965
Filing Date :14/03/2003
(87) International Publication No :WO/2003/079212
(61) Patent of Addition to Application Number :NA
Filing Date :NA
(62) Divisional to Application Number :1311/KOLNP/2004
Filed on :08/09/2004

(71)**Name of Applicant :**
1)CITRIX SYSTEMS, INC.
Address of Applicant :851 W.CYPRESS CREEK ROAD, FORT LAUDERDALE, FL 33309 U.S.A.
(72)**Name of Inventor :**
1)ROBINSON, DAVID
2)LABORCZFALVI, LEE
3)SEMAAN, PIERRE
4)ROYCHOUDHRY, ANIL
5)DUURSMA, MARTIN
6)PANASYUK, ANATOLIY

(57) Abstract :
A method for generating a graphical display for a remote terminal session, the method comprises; monitoring output produced by an application program executing on a server; identifying a textual element and a non-textual element of the output; retrieving a compressed data format associated with the non-textual element; and transmitting to the remote terminal session the textual element and the compressed data format in place of the non-textual element.

No. of Pages : 35 No. of Claims : 34

(12) PATENT APPLICATION PUBLICATION
(19) INDIA
(22) Date of filing of Application :06/02/2013
(21) Application No.321/KOLNP/2013 A
(43) Publication Date : 05/07/2013

(54) Title of the invention : MOULDING, SUCH AS, FOR EXAMPLE, A KITCHEN SINK, WASH BASIN OR THE LIKE, AND METHOD FOR PRODUCING SUCH A MOULDING

(51) International classification :C04B26/06,A47B77/02,B29C39/02
(31) Priority Document No :10 2010 046 627.1
(32) Priority Date :17/09/2010
(33) Name of priority country :Germany
(86) International Application No :PCT/EP2011/004486
Filing Date :06/09/2011
(87) International Publication No :WO 2012/034663
(61) Patent of Addition to Application Number :NA
Filing Date :NA
(62) Divisional to Application Number :NA
Filing Date :NA

(71)**Name of Applicant :**
1)SCHOCK GMBH
Address of Applicant :Hofbauerstrasse 1, 94209 Regen, Germany
(72)**Name of Inventor :**
1)PATERNOSTER, Rudolf
2)GEIER, Josef
3)REICHENBERGER, Roland

(57) Abstract :
The invention relates to a moulding (1), such as a kitchen sink, wash basin, work surface or the like, produced from a composite material comprising a cured polymer binder and filler particles embedded therein, by moulding a preferably repeatedly usable mould, wherein the surface (8) of a visible face (10) of the moulding (1), in particular a visible face (10) of the moulding (1) that is substantially horizontal in the use state of the moulding (1) has irregularities formed by pores (20) characterised in that more than 30% and less than 90%, in particular more than 40% and less than 80%, and preferably more than 50% and less than 65% of the surface (8) of the visible face (10) is formed by pores (20), the width (24) of which amounts on average to more than 0.1 mm and less than 1 mm, the depth (26) of which amounts on average to more than 10 µm and less than 50 µm, and the ratio of depth (26) to width (24) of the pores (20) amounts on average to more than 1:4 and less than 1:30. The invention also relates to a method for producing such a moulding.

No. of Pages : 21 No. of Claims : 13

(12) PATENT APPLICATION PUBLICATION
(19) INDIA
(22) Date of filing of Application :28/01/2013

(21) Application No.224/KOLNP/2013 A
(43) Publication Date : 05/07/2013

(54) Title of the invention : METHOD AND ARRANGEMENT FOR REDUCING INTERFERENCE AND ENHANCING COVERAGE

(51) International classification :H04B7/06,H04W16/28,H04B7/02
(31) Priority Document No :NA
(32) Priority Date :NA
(33) Name of priority country :NA
(86) International Application No :PCT/EP2010/059612
Filing Date :06/07/2010
(87) International Publication No :WO 2012/003860
(61) Patent of Addition to Application Number :NA
Filing Date :NA
(62) Divisional to Application Number :NA
Filing Date :NA

(71)**Name of Applicant :**
1)TELEFONAKTIEBOLAGET LM ERICSSON (PUBL)
Address of Applicant :SE-164 83 Stockholm, Sweden
(72)**Name of Inventor :**
1)NILSSON, Andreas
2)ATHLEY, Fredrik
3)PERSSON, Patrik

(57) Abstract :
In a method of controlling downlink transmitting power and antenna coverage of base stations in a communication system, the system comprising a plurality of base stations and a plurality of user equipment each associated with at least one of the plurality of base stations, providing (S10) interference and noise information for each of at least a subset of the plurality of user equipment. Subsequently, identifying (S20) at least one interfering base station for at least one user equipment of the subset, and jointly analyzing (S30) the provided interference and noise information for the subset together with the identified at least one interfering base station. Finally, jointly adapting (S40) a transmitting power level and/ or an antenna beam of the at least one identified interfering base stations based on the analysis, to provide reduced power consumption and increased coverage in the communication system.

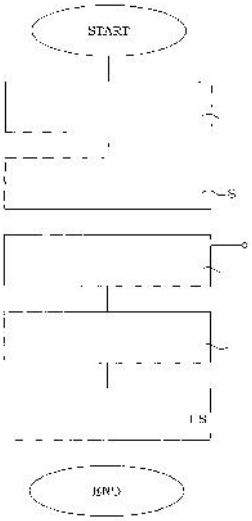

No. of Pages : 37 No. of Claims : 3

(12) PATENT APPLICATION PUBLICATION
(19) INDIA
(22) Date of filing of Application :29/01/2013
(21) Application No.241/KOLNP/2013 A
(43) Publication Date : 05/07/2013

(54) Title of the invention : METHOD AND SYSTEM FOR THE AUTOMATIC LOADING OF AIR TRANSPORT UNITS

(51) International classification :B65G65/23,B64F1/32,B65D88/56
(31) Priority Document No :NA
(32) Priority Date :NA
(33) Name of priority country :NA
(86) International Application No :PCT/FI2010/050658
Filing Date :19/08/2010
(87) International Publication No :WO 2012/022826
(61) Patent of Addition to Application Number :NA
Filing Date :NA
(62) Divisional to Application Number :NA
Filing Date :NA

(71)**Name of Applicant :**
1)AHKERA SMART TECH OY
Address of Applicant :Teknobulevardi 3-5, 01530 Vantaa, Finland
(72)**Name of Inventor :**
1)TUOMINEN, Juha
2)RUOSLAHTI, Harri
3)JUOSILA, Arto

(57) Abstract :
The present invention creates a method a system for the automatic loading of air-transport units. In the method according to the invention the piece goods (30) and the air-transport unit (10), on at least one side of which is an openable loading opening, are transported to the packing location (60), when the piece goods (30) are packed automatically through the loading opening into the air transport unit (10). The air-transport unit (10) is tilted in connection with the packing, in such a way that the side with the loading opening is raised relative to the side opposite to the loading opening, so that the air-transport unit (10) is loaded in at least two different attitudes.

No. of Pages : 42 No. of Claims : 16

(12) PATENT APPLICATION PUBLICATION
(19) INDIA
(22) Date of filing of Application :06/02/2013

(21) Application No.315/KOLNP/2013 A
(43) Publication Date : 05/07/2013

(54) Title of the invention : AN IN VITRO METHOD OF PERFORMING NUCLEIC ACID TEMPLATED MULTI-STEP SYNTHESIS

(51) International classification :C12N
(31) Priority Document No :60/277081
(32) Priority Date :19/03/2001
(33) Name of priority country :U.S.A.
(86) International Application No :PCT/US2002/08546
Filing Date :19/03/2002
(87) International Publication No : WO/2002/074929
(61) Patent of Addition to Application Number :NA
Filing Date :NA
(62) Divisional to Application Number :1015/KOLNP/2008
Filed on :07/03/2008

(71)**Name of Applicant :**
1)PRESIDENT AND FELLOWS OF HARVARD COLLEGE
Address of Applicant :17 QUINCY STREET, CAMBRIDGE MA 02139 U.S.A.
(72)**Name of Inventor :**
1)LIU, DAVID, R.
2)GARTNER, ZEV, J.
3)KANAN, MATTEW, W.

(57) Abstract :
The present invention discloses an in vitro method of performing nucleic acid templated multi-step synthesis, the method comprising the steps of:(a)providing (i) a template comprising a first reactive unit covalently associated with a first oligonucleotide defining a first codon sequence and a second, different codon sequence, (ii) a first transfer unit comprising a second reactive unit associated with a second oligonucleotide defining a first anti-codon sequence complementary to the first codon sequence of the template, and (iii) a second transfer unit comprising a third reactive unit associated with a third oligonucleotide defining a second anti-codon sequence complementary to the second, different codon sequence of the template;(b)annealing the first codon and first anti-codon sequences to bring the first reactive unit and the second reactive unit into reactive proximity, thereby inducing a reaction between the first and second reactive units to produce a reaction product independently of ribosomal machinery, wherein the reaction product is not a nucleic acid; and (c)annealing the second codon and second anti-codon sequences, thereby inducing a reaction with the third reactive unit independently of ribosomal machinery.

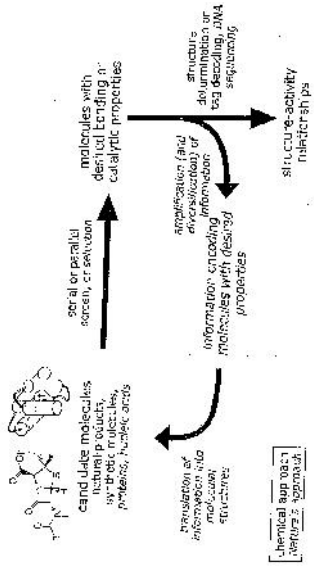

No. of Pages : 167 No. of Claims : 47

(12) PATENT APPLICATION PUBLICATION
(21) Application No.333/KOLNP/2013 A
(19) INDIA
(22) Date of filing of Application :07/02/2013
(43) Publication Date : 05/07/2013

(54) Title of the invention : ANTENNA ALLOCATION APPARATUS AND METHOD FOR CELLULAR MOBILE COMMUNICATION SYSTEM

(51) International classification :H04B7/04
(31) Priority Document No :10-2010-0116020
(32) Priority Date :22/11/2010
(33) Name of priority country :Republic of Korea
(86) International Application No :PCT/KR2011/008702
Filing Date :15/11/2011
(87) International Publication No :WO 2012/070800
(61) Patent of Addition to Application Number :NA
Filing Date :NA
(62) Divisional to Application Number :NA
Filing Date :NA

(71)**Name of Applicant :**
1)SAMSUNG ELECTRONICS CO., LTD.
Address of Applicant :129, Samsung-ro Yeongtong-gu, Suwon-si, Gyeonggi-do 443-742, Republic of Korea
(72)**Name of Inventor :**
1)KIM Youn Sun
2)KIM Young Bum
3)LEE Hyo Jin
4)CHO Joon Young
5)LEE Ju Ho
6)HAN Jin Kyu
7)CHENG Shan

(57) Abstract :
A method and apparatus for selecting and allocating antennas efficiently are provided.. The method includes transmitting, to a User Equipment (UE), information indicating a configuration of a plurality of Channel Status Information Reference Signals (CSI-RSs) through UE specific signaling during an initial access attempt with the UE; receiving, from the UE, CSI-RS measurement results indicating configured CSI-RSs; transmitting CSI-RSs corresponding to a set of available distributed ports (D-ports) based on received signal strength information included in results of the CSI-RS measurement; and determining a CSI-RS of a selected D-port set for use in communications based on feedback information received from the UE.

No. of Pages : 30 No. of Claims : 20

(12) PATENT APPLICATION PUBLICATION
(19) INDIA
(22) Date of filing of Application :22/01/2013
(21) Application No.191/KOLNP/2013 A
(43) Publication Date : 05/07/2013

(54) Title of the invention : INFLATABLE UMBRELLA

(51) International classification :A45B19/02
(31) Priority Document No :10 2010 032 210.5
(32) Priority Date :26/07/2010
(33) Name of priority country :Germany
(86) International Application No :PCT/DE2011/001517
Filing Date :25/07/2011
(87) International Publication No :WO 2012/062245
(61) Patent of Addition to Application Number :NA
Filing Date :NA
(62) Divisional to Application Number :NA
Filing Date :NA

(71)**Name of Applicant :**
1)VAITL Rolf
Address of Applicant :Bauseweinallee 38, D-81247 München, Germany
(72)**Name of Inventor :**
1)VAITL Rolf

(57) Abstract :
An inflatable umbrella (100) has an inflatable covering (105) made from a flexible material. In an inflated state, said covering forms at least the following elements: a central holding element (110), at least three umbrella strut elements (115,120,125,130) extending away from the central holding element, and at least one umbrella surface element (135,140,145,150) stretched out by the umbrella strut elements. In this case, the central holding element (110) and each umbrella strut element are supported against each other at the respective contact point thereof. In the inflated state, the umbrella (100) has greater stability and resistance to external forces in comparison to previously known inflatable umbrellas.

No. of Pages : 30 No. of Claims : 15

(12) PATENT APPLICATION PUBLICATION
(21) Application No.256/KOLNP/2013 A
(19) INDIA
(22) Date of filing of Application :30/01/2013
(43) Publication Date : 05/07/2013

(54) Title of the invention : STEEL SHEET FOR HOT STAMPING, AND PROCESS FOR MANUFACTURING HOT-STAMPED STEEL PRODUCTS USING STEEL SHEET FOR HOT STAMPING

(51) International classification :C25D5/26,B21D22/20,C22C18/00
(31) Priority Document No :2010-174957
(32) Priority Date :04/08/2010
(33) Name of priority country :Japan
(86) International Application No :PCT/JP2011/067680
Filing Date :02/08/2011
(87) International Publication No :WO 2012/018014
(61) Patent of Addition to Application Number :NA
Filing Date :NA
(62) Divisional to Application Number :NA
Filing Date :NA

(71)**Name of Applicant :**
1)JFE STEEL CORPORATION
Address of Applicant :2-3, Uchisaiwai-cho 2-chome, Chiyoda-ku, Tokyo 1000011 Japan
(72)**Name of Inventor :**
1)NAKAJIMA, Seiji
2)MIYOSHI, Tatsuya
3)NAKAMARU, Hiroki

(57) Abstract :
In order to provide a steel sheet for hot pressing from which a hot-pressed part excellent in perforation corrosion resistance is obtainable and a method of manufacturing a hot-pressed part using the steel sheet for hot pressing, provided is a steel sheet for hot pressing having, sequentially on a surface of a base steel sheet: a plating layer I containing 60% by mass or more of Ni and the remainder consisting of Zn and inevitable impurities, a coating mass thereof being 0.01 to 5 g/m2; and a plating layer II containing 10 to 25% by mass of Ni and the remainder consisting of Zn and inevitable impurities, a coating mass thereof being 10 to 90 g/m2.

No. of Pages : 31 No. of Claims : 7

(12) PATENT APPLICATION PUBLICATION
(21) Application No.311/KOLNP/2013 A
(19) INDIA
(22) Date of filing of Application :05/02/2013
(43) Publication Date : 05/07/2013

(54) Title of the invention : SYSTEM AND METHOD FOR SUPPLYING HYDROGEN GAS, AND HYDROGEN FUEL CELL SYSTEM

(51) International classification :H01M8/04,H01M8/06
(31) Priority Document No :201010293004.5
(32) Priority Date :25/09/2010
(33) Name of priority country :China
(86) International Application No :PCT/CN2011/075023
Filing Date :31/05/2011
(87) International Publication No :WO 2011/137853
(61) Patent of Addition to Application Number :NA
Filing Date :NA
(62) Divisional to Application Number :NA
Filing Date :NA

(71)**Name of Applicant :**
1)HUAWEI TECHNOLOGIES CO., LTD.
Address of Applicant :Huawei Administration Building, Bantian, Longgang District, Shenzhen, Guangdong 518129, P.R. China
(72)**Name of Inventor :**
1)WANG, Xingjie
2)WU, Haijun

(57) Abstract :
A system and a method for supplying hydrogen and a hydrogen fuel cell system are provided. The system for supplying hydrogen includes a hydrogen infusing unit and a hydrogen supply unit (100) which comprises a hydrogen storage unit (1), a hydrogen conveying unit (2) and a charging apparatus (3) connected with the hydrogen storage unit, wherein the charging apparatus (3) comprises a charging opening (31) matched with the hydrogen infusing unit which comprises an infusing apparatus matched with the charging opening (31). The external infusing apparatus uses the charging opening (31) to infuse hydrogen to the hydrogen storage container contained in the hydrogen storage unit, which avoids replacement of the hydrogen storage container (13) during the entire infusing process, and enables the intensively supplementing hydrogen period in a convenient and fast manner.

No. of Pages : 35 No. of Claims : 11

(12) PATENT APPLICATION PUBLICATION
(21) Application No.339/KOLNP/2013 A
(19) INDIA
(22) Date of filing of Application :08/02/2013
(43) Publication Date : 05/07/2013

(54) Title of the invention : METHOD FOR DETERMINING WEAR OF A ROLL FOR ROLLING METAL STOCK

(51) International classification :B21B38/00
(31) Priority Document No :10174341.7
(32) Priority Date :27/08/2010
(33) Name of priority country :EPO
(86) International Application No :PCT/EP2011/058155
Filing Date :19/05/2011
(87) International Publication No :WO 2012/025266
(61) Patent of Addition to Application Number :NA
Filing Date :NA
(62) Divisional to Application Number :NA
Filing Date :NA

(71)**Name of Applicant :**
1)SIEMENS AKTIENGESELLSCHAFT
Address of Applicant :Wittelsbacherplatz 2, 80333 M¼nchen Germany
(72)**Name of Inventor :**
1)DAGNER Johannes
2)KURZ Matthias

(57) Abstract :
In order to determine wear (d) on a roll (3) for rolling metal stock (1) a volume temperature distribution (VT) of the roll (3) is updated with reference to a heat flow distribution (WT) occurring on the surface of the roll (3) by means of a temperature model of the roll (3). The volume temperature distribution (VT) is spatially resolved at least in the axial direction and in the radial direction of the roll (3). The heat flow distribution (WT) is spatially resolved in the axial direction and in the tangential direction of the roll (3). The wear (d) on the roll (3) is determined by means of a wear model (11). Within the context of the wear model (11) at least one upper surface temperature (T) which occurs at specific points on the surface of the roll (3) is determined with reference to the updated volume temperature distribution (VT) and/or the heat flow distribution (WT) while the respective point is in contact with the metal stock (1). The wear (d) on the roll (3) is determined taking account of the upper surface temperature (T) of the roll (3).

No. of Pages : 42 No. of Claims : 16

(12) PATENT APPLICATION PUBLICATION
(19) INDIA
(22) Date of filing of Application :06/11/2012

(21) Application No.3394/KOLNP/2012 A
(43) Publication Date : 05/07/2013

(54) Title of the invention : ELECTROLYTE INJECTION DEVICE AND ELECTROLYTE INJECTION METHOD

(51) International classification :H01M2/36
(31) Priority Document No :2010-088696
(32) Priority Date :07/04/2010
(33) Name of priority country :Japan
(86) International Application No :PCT/JP2011/058784
Filing Date :07/04/2011
(87) International Publication No :WO 2011/126068
(61) Patent of Addition to Application Number :NA
Filing Date :NA
(62) Divisional to Application Number :NA
Filing Date :NA

(71)**Name of Applicant :**
1)NISSAN MOTOR CO., LTD.
Address of Applicant :2, Takara-cho, Kanagawa-ku Yokohama-shi, Kanagawa 221-0023, Japan
(72)**Name of Inventor :**
1)TAKADA Koichi

(57) Abstract :
In order to more reliably reduce a time required to pour electrolyte into a battery case, a device for pouring the electrolyte into the battery case is provided with: a closed pressure-reducing chamber; an electrolyte pouring nozzle for pouring the electrolyte into the battery case disposed within the pressure reducing chamber; and an aerating tank for exposing the electrolyte, which is supplied to the electrolyte pouring nozzle, to the pressure within the pressure reducing chamber.

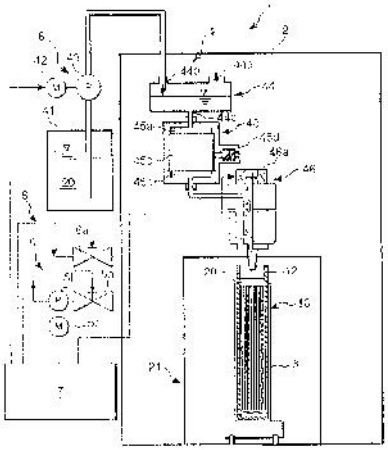

No. of Pages : 24 No. of Claims : 6

(12) PATENT APPLICATION PUBLICATION
(19) INDIA
(22) Date of filing of Application :06/11/2012
(21) Application No.3395/KOLNP/2012 A
(43) Publication Date : 05/07/2013

(54) Title of the invention : FRONT UNDERFLOOR STRUCTURE OF VEHICLE

(51) International classification :B62D35/02,B62D37/02
(31) Priority Document No :2010-089336
(32) Priority Date :08/04/2010
(33) Name of priority country :Japan
(86) International Application No :PCT/JP2011/058839
Filing Date :07/04/2011
(87) International Publication No :WO 2011/126085
(61) Patent of Addition to Application Number :NA
Filing Date :NA
(62) Divisional to Application Number :NA
Filing Date :NA

(71)**Name of Applicant :**
1)NISSAN MOTOR CO., LTD.
Address of Applicant :2, Takara-cho, Kanagawa-ku Yokohama-shi, Kanagawa 221-0023, Japan
(72)**Name of Inventor :**
1)KAKIUCHI Takeshi
2)ATAKA Masahiro
3)OGAWA Youhei
4)NAKAJIMA Kazuaki
5)ISHIHARA Yuji

(57) Abstract :
A front underfloor structure of a vehicle (EV) is provided with front deflectors (8L,8R) positioned in front of the front tires(1L,1R), and adjusts the flow of air that flows around the front underfloor while traveling. The front deflectors (8L,8R) comprise: a front apex section (8a) positioned further forward on the vehicle than the position of the leading edge surface (TFR) of the front tires (1L,1R) when straight, and disposed in a position that is closer to the vehicle center line (CL) in the vehicle width direction than the position of the inner surface (TIN) of the front tires (1L,1R) when straight; an outer end (8c) positioned further back on the vehicle than the front apex section (8a), and disposed in a position further outside than the front apex section (8a) in the vehicle width direction; and a second flow redirection surface (8e) that connects the front apex section (8a) and the outer end (8c), and that, when struck by air traveling from the front of the vehicle, redirects the flow of the air toward the outside of the vehicle.

No. of Pages : 42 No. of Claims : 5

(12) PATENT APPLICATION PUBLICATION
(19) INDIA
(22) Date of filing of Application :06/11/2012
(21) Application No.3396/KOLNP/2012 A
(43) Publication Date : 05/07/2013

(54) Title of the invention : FRONT UNDERFLOOR STRUCTURE OF VEHICLE

(51) International classification :B62D35/02,B62D25/20,B62D37/02
(31) Priority Document No :2010-089339
(32) Priority Date :08/04/2010
(33) Name of priority country :Japan
(86) International Application No :PCT/JP2011/058837
Filing Date :07/04/2011
(87) International Publication No :WO 2011/126084
(61) Patent of Addition to Application Number :NA
Filing Date :NA
(62) Divisional to Application Number :NA
Filing Date :NA

(71)**Name of Applicant :**
1)NISSAN MOTOR CO. LTD.
Address of Applicant :2, Takara-cho, Kanagawa-ku Yokohama-shi, Kanagawa 221-0023, Japan
(72)**Name of Inventor :**
1)KAKIUCHI Takeshi
2)ATAKA Masahiro
3)OGAWA Youhei
4)NAKAJIMA Kazuaki
5)ISHIHARA Yuji

(57) Abstract :
A front underfloor structure of a vehicle (EV) is provided with a protruding member, which protrudes below the front underfloor surface of the vehicle, and redirects the flow of air that flows around the front underfloor while traveling. The protruding member is configured as a protruding member with curved surface (31), which is positioned further forward on the vehicle than the front tires (1L,1R), and is disposed in the center of the front underfloor and straddles the vehicle center line (CL). The circumference of the protrusion of the protruding member with curved surface (31) is longest in the vehicle longitudinal direction at the position of the vehicle center line (CL), and the circumference of the protrusion in the vehicle longitudinal direction becomes gradually shorter in with increasing distance from the vehicle center line (CL) on both sides in the vehicle width direction.

No. of Pages : 45 No. of Claims : 5

(12) PATENT APPLICATION PUBLICATION
(19) INDIA
(22) Date of filing of Application :06/11/2012
(21) Application No.3397/KOLNP/2012 A
(43) Publication Date : 05/07/2013

(54) Title of the invention : DEVICES AND METHODS FOR TESTING ANALYTES

(51) International classification :G01N33/487
(31) Priority Document No :1007711.3
(32) Priority Date :07/05/2010
(33) Name of priority country :U.K.
(86) International Application No :PCT/GB2011/000703
Filing Date :06/05/2011
(87) International Publication No :WO 2011/138592
(61) Patent of Addition to Application Number :NA
Filing Date :NA
(62) Divisional to Application Number :NA
Filing Date :NA

(71)**Name of Applicant :**
1)EXACSYS LIMITED
Address of Applicant :123 Buckingham Palace Road, London SW1W 9SR, U.K.
(72)**Name of Inventor :**
1)NOBLE, Michael
2)NELSON, Craig
3)HUMPHRIES, Mark
4)LLOYD, Carys
5)EDINGTON, David
6)RIPPETH, John

(57) Abstract :
A method and device are provided for measuring a level of a clinically relevant analyte (such as glucose) in a fluid (such as blood). The device includes a flow path for conducting said fluid through the device; a detection chamber arranged on said flow path; and detector means arranged to detect analyte levels in the fluid in said chamber wherein: said detection chamber contains a predetermined amount of an analyte such that that analyte mixes with fluid in the detection chamber to form, at the detector means, a calibration sample of the fluid at a time after the arrival of the fluid in said detection chamber, and said detector means is arranged to detect a first analyte level of an unadulterated sample of the fluid at a first time which is before the formation of said calibration sample and to detect a second analyte level of said calibration sample at a second time which is after the formation of said calibration sample.

No. of Pages : 67 No. of Claims : 50

(12) PATENT APPLICATION PUBLICATION
(19) INDIA
(22) Date of filing of Application :24/01/2013
(21) Application No.212/KOLNP/2013 A
(43) Publication Date : 05/07/2013

(54) Title of the invention : 2,4- DIARYL - SUBSTITUTED [1, 8] NAPHTHYRIDINES AS KINASE INHIBITORS FOR USE AGAINST CANCER

(51) International classification :C07D471/04,C07D519/00,A61P35/00
(31) Priority Document No :10006683.6
(32) Priority Date :28/06/2010
(33) Name of priority country :EPO
(86) International Application No :PCT/EP2011/002692
Filing Date :31/05/2011
(87) International Publication No :WO 2012/000595
(61) Patent of Addition to Application Number :NA
Filing Date :NA
(62) Divisional to Application Number :NA
Filing Date :NA

(71)**Name of Applicant :**
1)MERCK PATENT GMBH
Address of Applicant :Frankfurter Strasse 250, 64293 Darmstadt, Germany
(72)**Name of Inventor :**
1)DORSCH Dieter
2)JONCZYK Alfred
3)HOELZEMANN Guenter
4)AMENDT Christiane
5)ZENKE Frank

(57) Abstract :
The present invention relates to novel [1,8]naphthyridine derivatives of formula (I) and to the use of such compounds in which the inhibition, regulation and/or modulation of signal transduction by ATP consuming proteins like kinases plays a role, particularly to inhibitors of TGF-beta receptor kinases, and to the use of such compounds for the treatment of kinase induced diseases, in particular for the treatment of tumors.

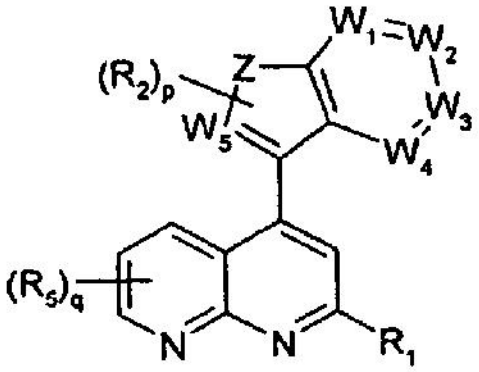

No. of Pages : 177 No. of Claims : 16

(12) PATENT APPLICATION PUBLICATION
(19) INDIA
(22) Date of filing of Application :28/01/2013

(21) Application No.228/KOLNP/2013 A
(43) Publication Date : 05/07/2013

(54) Title of the invention : A CENTRIFUGAL SEPARATOR

(51) International classification :B04B1/20,B04B7/12
(31) Priority Document No :10174374.8
(32) Priority Date :27/08/2010
(33) Name of priority country :EPO
(86) International Application No :PCT/EP2011/064032
Filing Date :15/08/2011
(87) International Publication No :WO 2012/025416
(61) Patent of Addition to Application Number :NA
Filing Date :NA
(62) Divisional to Application Number :NA
Filing Date :NA

(71)**Name of Applicant :**
1)ALFA LAVAL CORPORATE AB
Address of Applicant :P.O. Box 73, SE-221 00, Lund Sweden
(72)**Name of Inventor :**
1)ZHENG, Jie
2)WASE, Claes
3)RIDDERSTRÅLE, Rolf

(57) Abstract :
The present invention relates to a centrifugal separator (1) comprising a rotor (2) which is rotatable around an axis of rotation (R), the rotor (2) comprising a separation chamber (10) with an inlet (7, 9, 11) for a liquid mixture containing solid particles, at least one liquid outlet (18, 19, 20) for a separated liquid from the liquid mixture, and a solids outlet (22, 26, 27) for the separated solid particles, wherein a screw conveyor (3) is arranged to rotate inside the rotor (2) around the axis of rotation (R), at a different speed than the rotor (2), the screw conveyor (3) having at least one conveyor flight (3c) for transporting the separated solid particles in the separation chamber (10) towards and out of the solids outlet (22), wherein the conveyor flight (3c) is provided with wear resistant elements (23) arranged along its edge and the wear resistant elements (23) are spaced apart with an interspace (23a) between mutually adjacent wear resistant elements (23).

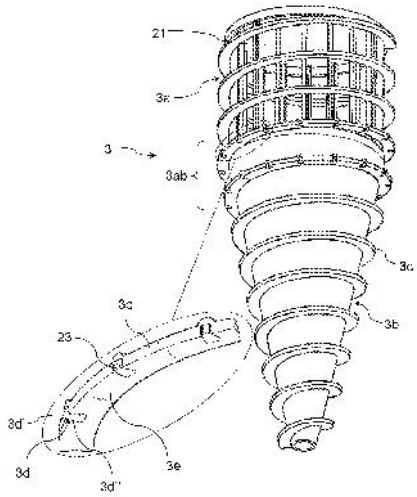

No. of Pages : 24 No. of Claims : 17

(12) PATENT APPLICATION PUBLICATION
(19) INDIA
(22) Date of filing of Application :01/02/2013
(21) Application No.281/KOLNP/2013 A
(43) Publication Date : 05/07/2013

(54) Title of the invention : DRY COMPOSITION WOUND DRESSINGS AND ADHESIVES.

(51) International classification :A61L15/32,A61L15/38,A61L15/42
(31) Priority Document No :61/370,821
(32) Priority Date :05/08/2010
(33) Name of priority country :U.S.A.
(86) International Application No :PCT/IB2011/053505
Filing Date :05/08/2011
(87) International Publication No :WO 2012/017415
(61) Patent of Addition to Application Number :NA
Filing Date :NA
(62) Divisional to Application Number :NA
Filing Date :NA

(71)**Name of Applicant :**
1)LIFEBOND LTD.
Address of Applicant :9 Halamish St., P.O. Box 3048, Industrial Park Caesarea 38900, Israel
(72)**Name of Inventor :**
1)PREISS-BLOOM, Orahn
2)BAYER, Thomas
3)KOMLOS, Chagai
4)TOMER, Guy
5)ZIV, Maria

(57) Abstract :
Patches comprising dry gelatin compositions and methods of use and manufacture thereof.

No. of Pages : 114 No. of Claims : 112

(12) PATENT APPLICATION PUBLICATION
(19) INDIA
(22) Date of filing of Application :06/02/2013
(21) Application No.320/KOLNP/2013 A
(43) Publication Date : 05/07/2013

(54) Title of the invention : 5-(BIPHENYL-4-YL)-3-PHENYL-1,2,4-OXADIAZOLYL DERIVATIVES AS LIGANDS ON THE SPHINGOSINE 1-PHOSPHATE (S1P) RECEPTORS

(51) International classification :C07D271/06,A61K31/4245,A61P37/02
(31) Priority Document No :10168833.1
(32) Priority Date :08/07/2010
(33) Name of priority country :EPO
(86) International Application No :PCT/EP2011/061372
Filing Date :06/07/2011
(87) International Publication No :WO 2012/004287
(61) Patent of Addition to Application Number :NA
Filing Date :NA
(62) Divisional to Application Number :NA
Filing Date :NA

(71)**Name of Applicant :**
1)MERCK SERONO S.A.
Address of Applicant :Centre industriel, CH-1267 Coinsins Switzerland
(72)**Name of Inventor :**
1)BOMBRUN Agnes
2)QUATTROPANI Anna
3)GONZALEZ Jerome
4)DORBAIS Jerome
5)KNIGHT Chris
6)BAKER-GLENN Charles

(57) Abstract :
The present invention provides compounds of Formula (I), as selective S1 P1 inhibitors, as well as their use for treating multiple sclerosis and other diseases.

No. of Pages : 194 No. of Claims : 16

(12) PATENT APPLICATION PUBLICATION
(21) Application No.340/KOLNP/2013 A
(19) INDIA
(22) Date of filing of Application :08/02/2013
(43) Publication Date : 05/07/2013

(54) Title of the invention : OPERATING METHOD FOR A ROLLING MILL FOR ROLLING FLAT ITEMS INTENDED FOR ROLLING HAVING ROLLER WEAR PREDICTION

(51) International classification :B21B38/00
(31) Priority Document No :10174297.1
(32) Priority Date :27/08/2010
(33) Name of priority country :EPO
(86) International Application No :PCT/EP2011/064153
Filing Date :17/08/2011
(87) International Publication No :WO 2012/025438
(61) Patent of Addition to Application Number :NA
Filing Date :NA
(62) Divisional to Application Number :NA
Filing Date :NA

(71)**Name of Applicant :**
1)SIEMENS AKTIENGESELLSCHAFT
Address of Applicant :Wittelsbacherplatz 2, 80333 München, Germany
(72)**Name of Inventor :**
1)DAGNER Johannes
2)SCHMID Friedemann
3)HOHENBICHLER Gerald
4)SHORE Robert Andrew
5)JUNGBAUER Andreas

(57) Abstract :
The invention relates to a roller mill for rolling flat rolled goods (1), comprising at least one roll stand (2) having rollers (3). The flat rolled goods (1) are rolled in the roll stand (2). During rolling of the flat rolled goods (1) in the roll stand (2), actual parameters (I) of the flat rolled goods (1) and/or the roll stand (2) are captured. Based on an initial state of at least one roller (3) of the roll stand (2), an expected current actual wear (V) of the at least one roller (3) is derived by means of a wear model (8), using the actual parameters (I) captured during the previous roller run of the particular roller (3). Based on the expected current actual wear (V), using the wear model (8) and expected actual future parameters for flat rolled goods (1) to be rolled in the future, an expected future actual wear (V),of the at least one roller (3) is derived for at least one position (P) of the future roller run. The position (P) of the future roller run, the expected future actual wear (V), and/or information derived from at least one of said values are made available to an operator (9) of the roller mill.

No. of Pages : 37 No. of Claims : 16

(12) PATENT APPLICATION PUBLICATION
(21) Application No.341/KOLNP/2013 A
(19) INDIA
(22) Date of filing of Application :08/02/2013
(43) Publication Date : 05/07/2013

(54) Title of the invention : INSTALLATION DEVICE WITH UNIVERSAL DATA COUPLING IN BUILDINGS SYSTEM ENGINEERING, AND ARRANGEMENTS WITH INSTALLATION DEVICES OF SUCH DESIGN

(51) International classification :H04L12/40
(31) Priority Document No :10 2010 034 991.7
(32) Priority Date :20/08/2010
(33) Name of priority country :Germany
(86) International Application No :PCT/EP2011/003653
Filing Date :21/07/2011
(87) International Publication No :WO 2012/022415
(61) Patent of Addition to Application Number :NA
Filing Date :NA
(62) Divisional to Application Number :NA
Filing Date :NA

(71)**Name of Applicant :**
1)ABB AG
Address of Applicant :Kallstadter Str. 1, 68309 Mannheim, Germany
(72)**Name of Inventor :**
1)LEHNERT, Christian
2)STRUWE, Christian

(57) Abstract :
An installation device (1,2,4,5,6) with universal data coupling in buildings system engineering with at least one mechanical bus connection (11,22) and at least one interface module (8,19,25,27) is proposed -wherein both the mechanical bus connection (11,22) and the interface module (8,19,25,27) have generic mechanical interfaces (10,12,21,23) designed to correspond to one another, -wherein the generic, mechanical interface (12,23) of the mechanical bus connection (11,22) has a control logic unit (14), including a bus connection and a memory (15), connected to it, -wherein the generic, mechanical interface (10,21) of the interface module (8,19,25,27) has a communication interface (9,20) connected to it which forms a user/data interface (13,24), -wherein interface modules (8,19,25,27) of different design can be connected to communication interfaces (9,20) of different design using the mechanical bus connection (11,22).

No. of Pages : 25 No. of Claims : 13

(12) PATENT APPLICATION PUBLICATION
(19) INDIA
(22) Date of filing of Application :06/11/2012
(21) Application No.3412/KOLNP/2012 A
(43) Publication Date : 05/07/2013

(54) Title of the invention : AN APPARATUS FOR CONNECTING AN INSERT IN A STEAM GENERATOR TUBE WITH A MATERIAL BOND BY WAY OF A WELDING WIRE NOZZLE WHICH IS ARRANGED ECCENTRICALLY WITH RESPECT TO THE CENTRE AXIS OF THE TORCH TUBE

(51) International classification :B23K9/028,B23K9/173,B23K9/29
(31) Priority Document No :EP10164423
(32) Priority Date :31/05/2010
(33) Name of priority country :EPO
(86) International Application No :PCT/EP2011/057424
Filing Date :09/05/2011
(87) International Publication No :WO 2011/151134
(61) Patent of Addition to Application Number :NA
Filing Date :NA
(62) Divisional to Application Number :NA
Filing Date :NA

(71)**Name of Applicant :**
1)SIEMENS AKTIENGESELLSCHAFT
Address of Applicant :Wittelsbacherplatz 2, 80333 München Germany
(72)**Name of Inventor :**
1)FRANKE ,Joachim
2)BRÜCKNER, Jan
3)EFFERT, Martin

(57) Abstract :
An apparatus for connecting an insert in a steam generator tube (14) with a material bond is intended to allow a technically particularly simple production process and particularly low susceptibility to repair of the steam generator tube (14) thus produced. For this purpose, the apparatus comprises a welding device, comprising a welding wire feeding device and a welding gas feeding device, and also a torch head (12), a torch tube (8) being rigidly connected to the torch head (12), and a welding wire nozzle (16) of the torch head (12) being arranged eccentrically with respect to the centre axis (18) of the torch tube (8).

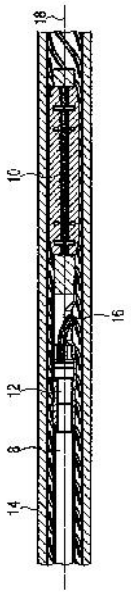

No. of Pages : 20 No. of Claims : 4

(12) PATENT APPLICATION PUBLICATION
(19) INDIA
(22) Date of filing of Application :06/11/2012
(21) Application No.3413/KOLNP/2012 A
(43) Publication Date : 05/07/2013

(54) Title of the invention : FAMILY CHAT

(51) International classification :G06F3/00
(31) Priority Document No :12/773,747
(32) Priority Date :04/05/2010
(33) Name of priority country :U.S.A.
(86) International Application No :PCT/US2011/035015
Filing Date :03/05/2011
(87) International Publication No :WO 2011/140098
(61) Patent of Addition to Application Number :NA
Filing Date :NA
(62) Divisional to Application Number :NA
Filing Date :NA

(71)**Name of Applicant :**
1)QWEST COMMUNICATIONS INTERNATIONAL INC.
Address of Applicant :1801 California Street, Suite 900, Denver, Colorado 80202 U.S.A.
(72)**Name of Inventor :**
1)ZAMBETTI, Nicholas
2)TANE, Jesse
3)GOSLING, Katrin B.
4)MEHIN, Afshin Frederick
5)STAFFORD, Coe Leta Rayne
6)HEATON, Martin Nicholas John
7)VAN DER FLIER, Astrid
8)GIBSON, Michael
9)CERAMI, Richard

(57) Abstract :
Systems and methods are described for handling graphical interfacing with a group conversation involving a communications hub and multiple member devices. Embodiments provide a family chat communications mode for facilitating a synchronous conversation among all the members of the designated family group. Typically the conversation may involve a user supersystem (e.g. including one or more graphical communications devices) associated with the family and disposed with the family s local network and member devices associated with each member of the family group (e.g. cell phones etc). In some embodiments, the family chat conversation is displayed (e.g. rendered) as a substantially continuous feed graphically indicating the party contributing each message to the feed, the temporal relationship of the various contributions, and other useful information.

No. of Pages : 80 No. of Claims : 20

(12) PATENT APPLICATION PUBLICATION
(21) Application No.3414/KOLNP/2012 A
(19) INDIA
(22) Date of filing of Application :06/11/2012
(43) Publication Date : 05/07/2013

(54) Title of the invention : METHOD FOR ACCESSING TO RADIO FREQUENCY COMMUNICATION WITH LOW-FREQUENCY ELECTROMAGNETIC COMMUNICATION

(51) International classification :H04L9/32
(31) Priority Document No :2010101630645
(32) Priority Date :05/05/2010
(33) Name of priority country :China
(86) International Application No :PCT/CN2010/073509
Filing Date :03/06/2010
(87) International Publication No :WO 2011/137600
(61) Patent of Addition to Application Number :NA
Filing Date :NA
(62) Divisional to Application Number :NA
Filing Date :NA

(71)**Name of Applicant :**
1)NATIONZ TECHNOLOGIES INC.
Address of Applicant :Room 301 & 302, Building No. 3, Shenzhen Software Park in Hi-tech Industry Zone, Nanshan District, Shenzhen city, Guangdong 518057 China
(72)**Name of Inventor :**
1)YANG, Xianwei

(57) Abstract :
The present invention deals with a method for accessing to radio frequency communication with low frequency electromagnetic communication. The method includes: a request side sends an activation request including the first random data via a low frequency channel; a requested side receives the activation request, generates an activation response message including the second random data and an identifier of the requested side, and sends the activation response message according to the first radio frequency communication address; the request side receives and verifies the activation response message. If the verification is passed the request side generates a connection request including the third random data, and sends the connection request according to the second radio frequency communication address; the requested side receives and verifies the connection request. If the verification is passed the requested side generates a connection response message, and sends the connection response message according to the second radio frequency communication address; the request side receives the connection response message to verify whether the connection is successful. If the connection is successful, the request side trades with the requested side, according to the second radio frequency address, via a radio channel. The present invention accelerates the access speed of the radio frequency communication with low-frequency electromagnetic communication.

No. of Pages : 21 No. of Claims : 18

(12) PATENT APPLICATION PUBLICATION
(19) INDIA
(22) Date of filing of Application :06/11/2012
(21) Application No.3400/KOLNP/2012 A
(43) Publication Date : 05/07/2013

(54) Title of the invention : VIRTUAL CLUSTER SWITCHING

(51) International classification :H04L12/24,H04L12/56
(31) Priority Document No :61/330,678
(32) Priority Date :03/05/2010
(33) Name of priority country :U.S.A.
(86) International Application No :PCT/US2011/034917
Filing Date :03/05/2011
(87) International Publication No :WO 2011/140028
(61) Patent of Addition to Application Number :NA
Filing Date :NA
(62) Divisional to Application Number :NA
Filing Date :NA

(71)**Name of Applicant :**
1)BROCADE COMMUNICATIONS SYSTEMS, INC.
Address of Applicant :130 Holger Way San Jose California 95134 U.S.A.
(72)**Name of Inventor :**
1)VOBBILISETTY, Suresh
2)CHATWANI, Dilip
3)HARIS Shiv
4)KOGANTI Phanidhar
5)GUNTAKA, Vidyasagara, R.
6)WILLEKE, Jesse B.
7)NARAYANASAMY, Senthilkumar

(57) Abstract :
One embodiment of the present invention provides a switch system. The switch system includes one or more ports (208,210) on the switch configured to transmit packets encapsulated based on the TRILL protocol. The switch system further includes a control mechanism. During operation, the control mechanism forms a logical switch based on the Fibre Channel protocol, receives an automatically assigned identifier for the logical switch without requiring manual configuration of the identifier, and joins a virtual cluster switch (200).

No. of Pages : 96 No. of Claims : 20

(12) PATENT APPLICATION PUBLICATION
(19) INDIA
(22) Date of filing of Application :06/11/2012
(21) Application No.3401/KOLNP/2012 A
(43) Publication Date : 05/07/2013

(54) Title of the invention : SYSTEMS, METHODS, AND COMPUTER READABLE MEDIA FOR SECURITY IN PROFILE UTILIZING SYSTEMS

(51) International classification :G06F21/20,G06F21/24,G06F15/16
(31) Priority Document No :61/332,061
(32) Priority Date :06/05/2010
(33) Name of priority country :U.S.A.
(86) International Application No :PCT/US2011/035628
Filing Date :06/05/2011
(87) International Publication No :WO 2011/140506
(61) Patent of Addition to Application Number :NA
Filing Date :NA
(62) Divisional to Application Number :NA
Filing Date :NA

(71)**Name of Applicant :**
1)ATIGEO LLC
Address of Applicant :800 Bellevue Way NE, Suite 600, Bellevue, Washington 98004 U.S.A.
(72)**Name of Inventor :**
1)SANDOVAL, Michael
2)DOWNS, Oliver Bruce

(57) Abstract :
Security and distributed storage is described for systems using electronic profile information. Embodiments may be utilized for ID, data, and access analysis. Dynamic distributed redundant encryption may be used that may be based on user, device, location, context information, physical, or environmental characteristics.

No. of Pages : 46 No. of Claims : 38

(12) PATENT APPLICATION PUBLICATION
(19) INDIA
(22) Date of filing of Application :06/11/2012
(21) Application No.3402/KOLNP/2012 A
(43) Publication Date : 05/07/2013

(54) Title of the invention : LIQUID COMPOSITION, RECORDING METHOD, AND RECORDED MATTER

(51) International classification :C09D11/00,B41J2/01,B41M5/00
(31) Priority Document No :2010-147592
(32) Priority Date :29/06/2010
(33) Name of priority country :Japan
(86) International Application No :PCT/JP2011/064189
Filing Date :15/06/2011
(87) International Publication No :WO 2012/002198
(61) Patent of Addition to Application Number :NA
Filing Date :NA
(62) Divisional to Application Number :NA
Filing Date :NA

(71)**Name of Applicant :**
1)Ricoh Company, Ltd.
Address of Applicant :3-6, Nakamagome 1-chome Ohta-ku, Tokyo 1438555 Japan
(72)**Name of Inventor :**
1)GOTOU, Hiroshi
2)FUJII, Hidetoshi
3)NAGAI, Kiyofumi

(57) Abstract :
A liquid composition for agglutinating particles having a negative charge which are dispersed in a dispersion liquid, the liquid composition including: an organic acid ammonium salt represented by Formula (1), and water, Formula (1) where R1 represents a hydroxyl group, a methyl group or a hydrogen atom; and R2 represents a hydroxyl group or a methyl group.

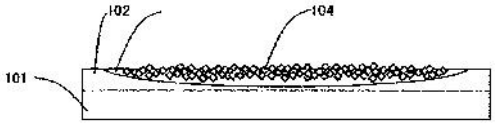

No. of Pages : 117 No. of Claims : 9

(12) PATENT APPLICATION PUBLICATION
(19) INDIA
(22) Date of filing of Application :06/11/2012
(21) Application No.3403/KOLNP/2012 A
(43) Publication Date : 05/07/2013

(54) Title of the invention : A COMPOSITION COMPRISING MICROFIBRILLATED CELLULOSE AND A PROCESS FOR THE PRODUCTION OF A COMPOSITION

(51) International classification	:C09D101/02,D21H19/36,D21H19/44
(31) Priority Document No	:1050471-0
(32) Priority Date	:12/05/2010
(33) Name of priority country	:Sweden
(86) International Application No	:PCT/IB2011/052063
Filing Date	:11/05/2011
(87) International Publication No	:WO 2011/141876
(61) Patent of Addition to Application Number	:NA
Filing Date	:NA
(62) Divisional to Application Number	:NA
Filing Date	:NA

(71)**Name of Applicant :**
1)STORA ENSO OYJ
Address of Applicant :Kanavaranta 1, FIN-00101 Helsinki FINLAND
(72)**Name of Inventor :**
1)HEISKANEN, Isto
2)BACKFOLK, Kaj

(57) Abstract :
The present invention relates to a composition comprising microfibrillated cellulose, mono-, di-or oligo-saccharides and a pigment in order to achieve a composition with improved rheological properties such as a low viscosity even at high dry content. The present invention further relates to process for the production of said composition. The microfibrillated cellulose is produced by at least partly enzymatic treatment of cellulosic fibers such that even mono-, di-or oligo-saccharide is formed.

No. of Pages : 17 No. of Claims : 14

(12) PATENT APPLICATION PUBLICATION
(19) INDIA
(22) Date of filing of Application :06/11/2012
(21) Application No.3404/KOLNP/2012 A
(43) Publication Date : 05/07/2013

(54) Title of the invention : MOBILE COMMUNICATION METHOD, MOBILE STATION AND RADIO BASE STATION

(51) International classification :H04W24/10
(31) Priority Document No :2010-106006
(32) Priority Date :30/04/2010
(33) Name of priority country :Japan
(86) International Application No :PCT/JP2011/060418
Filing Date :28/04/2011
(87) International Publication No :WO 2011/136352
(61) Patent of Addition to Application Number :NA
Filing Date :NA
(62) Divisional to Application Number :NA
Filing Date :NA

(71)**Name of Applicant :**
1)NTT DOCOMO, INC.
Address of Applicant :11-1, Nagatacho 2-chome Chiyoda-ku, Tokyo 1006150 Japan
(72)**Name of Inventor :**
1)IWAMURA, Mikio
2)HAPSARI, Wuri Andarmawanti
3)UMESH, Anil

(57) Abstract :
A mobile communication method comprises: a step (A) in which a radio base station (eNB) transmits, to a mobile station (UE), MDT MeasConfig including both MeasObject and ReportConfig; and a step (B) in which the mobile station (UE) uses SRB, which is designated by ReportConfig to transmit to the radio base station (eNB), MDT MeasReport including a measurement result in a measurement object designated by MeasObject.

No. of Pages : 27 No. of Claims : 3

(12) PATENT APPLICATION PUBLICATION
(19) INDIA
(22) Date of filing of Application :06/11/2012
(21) Application No.3405/KOLNP/2012 A
(43) Publication Date : 05/07/2013

(54) Title of the invention : VIDEO CALL HANDLING

(51) International classification :H04N7/14
(31) Priority Document No :61/331,337
(32) Priority Date :04/05/2010
(33) Name of priority country :U.S.A.
(86) International Application No :PCT/US2011/035025
Filing Date :03/05/2011
(87) International Publication No :WO 2011/140107
(61) Patent of Addition to Application Number :NA
Filing Date :NA
(62) Divisional to Application Number :NA
Filing Date :NA

(71)**Name of Applicant :**
1)QWEST COMMUNICATIONS INTERNATIONAL INC.
Address of Applicant :1801 California Street, Suite 900, Denver, Colorado 80202 U.S.A.
(72)**Name of Inventor :**
1)MEHIN, Afshin Frederick
2)VENZA, Valentina
3)HOWARD, Suzanne Gibbs
4)VAN DER FLIER, Astrid
5)OBERWELZ, Elger
6)ZAMBETTI, Nicholas
7)TANE, Jesse
8)GOSLING, Katrin B.
9)STAFFORD, Coe Leta Rayne
10)HEATON, Martin Nicholas John
11)ADAMS, Matthew Robert
12)RIERING-CZEKALLA, Peter
13)SWITKY, Andrew Paul
14)GIBSON, Michael
15)CERAMI, Richard

(57) Abstract :
Solutions for facilitating enhanced video calling functionality. Embodiments include functionality for handling video calling through a communications hub. According to some embodiments, the communications hub is a user supersystem having multiple clients, each with an integrated camera and display, capable of seamlessly handing off video call functionality among the clients. Other embodiments integrate other functionality of the communications hub (e.g., web browsing, multimedia, etc.) into the video call environment.

No. of Pages : 72 No. of Claims : 26

(12) PATENT APPLICATION PUBLICATION
(19) INDIA
(22) Date of filing of Application :24/01/2013
(21) Application No.216/KOLNP/2013 A
(43) Publication Date : 05/07/2013

(54) Title of the invention : FORMULATIONS CONTAINING EXTRACTS OF ECHINACEA ANGUSTIFOLIA AND ZINGIBER OFFICINALE WHICH ARE USEFUL IN REDUCING INFLAMMATION AND PERIPHERAL PAIN

(51) International classification	:A61K36/28,A61K36/9068,A61K9/00
(31) Priority Document No	:MI2010A001373
(32) Priority Date	:26/07/2010
(33) Name of priority country	:Italy
(86) International Application No	:PCT/EP2011/062421
Filing Date	:20/07/2011
(87) International Publication No	:WO 2012/013551
(61) Patent of Addition to Application Number	:NA
Filing Date	:NA
(62) Divisional to Application Number	:NA
Filing Date	:NA

(71)**Name of Applicant :**
1)INDENA S.p.A.
Address of Applicant :Viale Ortles, 12, I-20139, Milano ITALY
(72)**Name of Inventor :**
1)BOMBARDELLI, Ezio
2)MORAZZONI, Paolo

(57) Abstract :
Disclosed is a combination of lipophilic extracts of Zingiber officinale and Echinacea angustifolia for the treatment of itching peripheral pain, superficial and deep inflammatory and painful states, pain associated with muscle spasms, herpes pain, and radiodermatitis caused by oncological radiotherapy, with or without fungal or bacterial infections.

No. of Pages : 14 No. of Claims : 7

(12) PATENT APPLICATION PUBLICATION
(19) INDIA
(22) Date of filing of Application :28/01/2013

(21) Application No.231/KOLNP/2013 A
(43) Publication Date : 05/07/2013

(54) Title of the invention : HEADREST SPEAKER ARRANGEMENT

(51) International classification :H04R5/02
(31) Priority Document No :61/369,265
(32) Priority Date :03/07/2010
(33) Name of priority country :U.S.A.
(86) International Application No :PCT/EP2011/062993
Filing Date :28/07/2011
(87) International Publication No :WO 2012/013745
(61) Patent of Addition to Application Number :NA
Filing Date :NA
(62) Divisional to Application Number :NA
Filing Date :NA

(71)**Name of Applicant :**
1)FRAUNHOFER-GESELLSCHAFT ZUR FOERDERUNG DER ANGEWANDTEN FORSCHUNG E.V.
Address of Applicant :Hansastrasse 27c, 80686 Muenchen, Germany
(72)**Name of Inventor :**
1)SILZLE, Andreas
2)HEISE, Ulrik
3)VARGA, Stefan
4)LANG, Matthias
5)HELLMUTH, Oliver

(57) Abstract :
In embodiments of the invention, a headrest of a vehicle seat or a speaker box which can be attached to the vehicle seat or to a headrest is described. The headrest or the speaker box may comprise at least one speaker integrated in the headrest or in the speaker box, wherein the speaker has a main sound emission direction and wherein the speaker is fixed in the headrest or in the speaker box in such a way that the main sound emission direction is inclined with respect to a backrest main direction of the backrest of the vehicle seat.

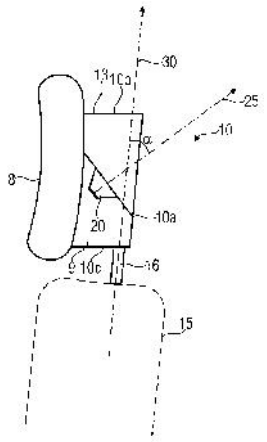

No. of Pages : 39 No. of Claims : 23

(12) PATENT APPLICATION PUBLICATION
(19) INDIA
(22) Date of filing of Application :29/01/2013
(21) Application No.248/KOLNP/2013 A
(43) Publication Date : 05/07/2013

(54) Title of the invention : AN ABSORBENT COMPOSITION DESIGNED FOR REMOVING CONTAMINANTS, MAINLY SULPHUR COMPOUNDS, CONTAINED IN LIQUID AND GASEOUS STREAMS, A METHOD FOR OBTAINING A DESIGNED ABSORBENT COMPOSITION, METHOD FOR REMOVING IMPURITIES, MAINLY SULPHUR COMPOUNDS, INCLUDING HYDROGEN SULFIDE, CONTAINED IN LIQUID OR GASEOUS STREAMS, AND USE OF AN ABSORBENT COMPOSITION

(51) International classification :B01D53/48,B01J20/28,B01J20/30
(31) Priority Document No :PI1002696-7
(32) Priority Date :27/08/2010
(33) Name of priority country :Brazil
(86) International Application No :PCT/BR2011/000214
Filing Date :08/07/2011
(87) International Publication No :WO 2012/024752
(61) Patent of Addition to Application Number :NA
Filing Date :NA
(62) Divisional to Application Number :NA
Filing Date :NA

(71)**Name of Applicant :**
1)CLARIANT S.A.
Address of Applicant :Av. Das Nações Unidas nº 18.001 Santo Amaro, So Paulo/SP, CEP 04795-110, Brazil
(72)**Name of Inventor :**
1)LOGLI, Marco Antonio
2)VICENTINI, Valéria Perfeito
3)AMARAL, Marcelo Brito de Azevedo

(57) Abstract :
The present invention relates to an absorbent composition composed of an iron oxide and/or hydroxide, activated carbon, promoters and binders, in the form of extruded tablets or granules, capable of absorbing impurities from fluid streams in order to eliminate the impurities, mainly sulphur compounds, contained in these streams. The present invention also relates to the methods for obtaining these absorbent compositions, and to the use thereof for eliminating impurities contained in liquid and gaseous streams.

No. of Pages : 26 No. of Claims : 25

(12) PATENT APPLICATION PUBLICATION
(19) INDIA
(22) Date of filing of Application :01/02/2013
(21) Application No.284/KOLNP/2013 A
(43) Publication Date : 05/07/2013

(54) Title of the invention : POLYMER FILMS WITH EMBEDDED IODINATED RESIN AND METHODS OF MANUFACTURING SAME

(51) International classification	:C08K3/02,B01D53/22,B01D59/12
(31) Priority Document No	:61/370,034
(32) Priority Date	:02/08/2010
(33) Name of priority country	:U.S.A.
(86) International Application No	:PCT/US2011/046147
Filing Date	:01/08/2011
(87) International Publication No	:WO 2012/018736
(61) Patent of Addition to Application Number	:NA
Filing Date	:NA
(62) Divisional to Application Number	:NA
Filing Date	:NA

(71)**Name of Applicant :**
1)TRIOMED INNOVATIONS CORP.
Address of Applicant :40 Allen Road, South Burlington, VT 05403-7801 U.S.A.
(72)**Name of Inventor :**
1)MESSIER, Pierre J.
2)OHAYON, David

(57) Abstract :
The disclosure relates to polymer films containing iodinated resin, where such films have advantageous antibacterial and/or antitoxic properties. The films may be used, for example in medical tape, wound dressings and bandages. In certain embodiments, the invention is also directed to methods of manufacturing such polymer films, where various manufacturing difficulties have been addressed and overcome.

No. of Pages : 32 No. of Claims : 26

(12) PATENT APPLICATION PUBLICATION
(21) Application No.344/KOLNP/2013 A
(19) INDIA
(22) Date of filing of Application :08/02/2013
(43) Publication Date : 05/07/2013

(54) Title of the invention : DISPERSANT FOR CALCIUM CARBONATE AND METHOD FOR PRODUCING SAME

(51) International classification :B01F17/52,C08F2/10,C08F6/00
(31) Priority Document No :2010-161049
(32) Priority Date :15/07/2010
(33) Name of priority country :Japan
(86) International Application No:PCT/JP2011/064687
Filing Date :27/06/2011
(87) International Publication No :WO 2012/008294
(61) Patent of Addition to Application Number :NA
Filing Date :NA
(62) Divisional to Application Number :NA
Filing Date :NA

(71)**Name of Applicant :**
1)TOAGOSEI CO., LTD.
Address of Applicant :1-14-1, Nishi-Shimbashi, Minato-ku, Tokyo 1058419 Japan
(72)**Name of Inventor :**
1)FUJIWARA Masahiro

(57) Abstract :
Provided is a dispersant for calcium carbonate with which the initial viscosity of a calcium carbonate slurry obtained by wet grinding is low and furthermore a marked rise in viscosity over time is prevented, and also provided is a method for producing the dispersant for calcium carbonate. The dispersant for calcium carbonate contains an acrylic polymer having a weight-average molecular weight between 4,500 and 8,500 that is obtained by: a polymerization step in which a monomer comprising acrylic acid is polymerized at a reaction temperature between 68 and 82ºC in the presence of 1.4 to 4.4 parts by mass of a hypophosphite and 0.3 to 1.5 parts by mass of a persulfate per 100 parts by mass of the monomer, using an isopropyl alcohol aqueous solution as a solvent; and a neutralization step in which 15 to 95 mol% of carboxyl groups having structural units derived from the monomer comprising the resulting polymer are neutralized.

No. of Pages : 55 No. of Claims : 10

(12) PATENT APPLICATION PUBLICATION
(19) INDIA
(22) Date of filing of Application :01/02/2013
(21) Application No.289/KOLNP/2013 A
(43) Publication Date : 05/07/2013

(54) Title of the invention : THE RECOVERY OF ALUMINA TRIHYDRATE DURING THE BAYER PROCESS USING SCLEROGLUCAN

(51) International classification :C01F7/06,C01F7/47,B01D21/01
(31) Priority Document No :12/852,917
(32) Priority Date :09/08/2010
(33) Name of priority country :U.S.A.
(86) International Application No :PCT/US2011/046352
Filing Date :03/08/2011
(87) International Publication No:WO 2012/021342
(61) Patent of Addition to Application Number :NA
Filing Date :NA
(62) Divisional to Application Number :NA
Filing Date :NA

(71)**Name of Applicant :**
1)NALCO COMPANY
Address of Applicant :1601 West Diehl Road, Naperville, Illinois 60563-1198, U.S.A.
(72)**Name of Inventor :**
1)CHESTER Ryan
2)KILDEA John D.
3)WANG Jing
4)BODE Heinrich E.
5)LI Xiaojin Harry

(57) Abstract :
The invention provides methods and compositions for improving the production of alumina. The invention involves adding a product containing one or more polysaccharides to liquor within the fluid circuit of the production process, where one of the polysaccharides is scleroglucan. The use of scleroglucan can impart a number of advantages including at least some of: greater flocculation effectiveness, increasing the maximum effective dosage, faster settling rate. The production process can be a Bayer process.

No. of Pages : 17 No. of Claims : 8

(12) PATENT APPLICATION PUBLICATION
(21) Application No.307/KOL/2011 A
(19) INDIA
(22) Date of filing of Application :09/03/2011
(43) Publication Date : 05/07/2013

(54) Title of the invention : AN APPARATUS AND DEVICE FOR ENRICHING CALORIFIC VALUE PRODUCER GAS BY LPG, CNG, LNG

(51) International classification :H02N11/00
(31) Priority Document No :NA
(32) Priority Date :NA
(33) Name of priority country :NA
(86) International Application No :NA
Filing Date :NA
(87) International Publication No : NA
(61) Patent of Addition to Application Number :NA
Filing Date :NA
(62) Divisional to Application Number :NA
Filing Date :NA

(71)**Name of Applicant :**
1)BHARAT HEAVY ELECTRICALS LIMITED
Address of Applicant :AT REGIONAL OPERATIONS DIVISION (ROD), PLOT NO: 9/1, DJ BLOCK 3RD FLOOR, KARUNAMOYEE, SALT LAKE CITY, KOLKATA-700091, HAVING ITS REGISTERED OFFICE AT BHEL HOUSE, SIRI FORT, NEW DELHI-110049, INDIA
(72)**Name of Inventor :**
1)SWAMINATHAN RAMAKRISHNAN
2)AUGUSTINE ANDREW
3)MANOHARAN RAVISHANKAR

(57) Abstract :
The present invention is provided with a device for enriching the low calorific value fuel with high calorific fuel like LPG, PG gases comprises a cylindrical pipe shaped part having a curvature contour inside the cylindrical pipe such that a small diameter orifice exists at the inside centre to create a venturi function for flow of gaseous medium and an inlet for PG gas and an inlet for LPG are provided at the first end of the device and an outlet for mixed gas is provided at the second end of the device; characterized in that the incoming petroleum gas having high pressure head and low velocity head and incoming LPG having high velocity head and low pressure are allowed to pass through orifice wherein a venturi arrangement is curved based on the Bernoulli's theorem and law of conservation ensuring transient flow of mixed gas with a uniform pressure at the burner inlet.

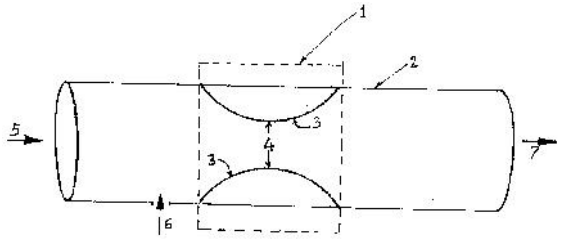

No. of Pages : 13 No. of Claims : 2

(12) PATENT APPLICATION PUBLICATION
(21) Application No.307/KOLNP/2013 A
(19) INDIA
(22) Date of filing of Application :05/02/2013
(43) Publication Date : 05/07/2013

(54) Title of the invention : METHOD FOR PRODUCING FIBERGLASS-REINFORCED THERMOPLASTIC RESIN COMPOSITION PELLETS

(51) International classification :B29B9/14,B29B7/48,B29B7/72
(31) Priority Document No :2010-191484
(32) Priority Date :27/08/2010
(33) Name of priority country :Japan
(86) International Application No :PCT/JP2011/067116
Filing Date :27/07/2011
(87) International Publication No :WO 2012/026270
(61) Patent of Addition to Application Number :NA
Filing Date :NA
(62) Divisional to Application Number :NA
Filing Date :NA

(71)**Name of Applicant :**
1)Polyplastics Co., Ltd.
Address of Applicant :2-18-1, Konan, Minato-ku, Tokyo 108-8280, Japan
(72)**Name of Inventor :**
1)HIRATA, Kunihiro
2)ISHIDA, Hiroshi
3)HIRAGORI, Motohito

(57) Abstract :
Provided are production conditions that can, in a short period of time, cause the fibrillation into monofilaments of fiberglass bundles that are glass roving, chopped strand, or the like that are monofilament assemblies in order to achieve high production characteristics in the production of a resin molded article using an extruder with at least two meshed shafts. The method produces fiberglass reinforced thermoplastic resin composition pellets using an extruder having at least two shafts provided with screws that rotate meshed with each other and sets production conditions by controlling the minimum value (minimum historical shear stress value (T)) of the time integral value of shear stress that the fiberglass bundles incur during mixing and kneading.

No. of Pages : 54 No. of Claims : 5

(12) PATENT APPLICATION PUBLICATION
(19) INDIA
(22) Date of filing of Application :07/02/2013
(21) Application No.327/KOLNP/2013 A
(43) Publication Date : 05/07/2013

(54) Title of the invention : DC POWER SUPPLY SYSTEM

(51) International classification :H02J7/34,H01M10/44,H02J7/02
(31) Priority Document No :2010-207253
(32) Priority Date :15/09/2010
(33) Name of priority country :Japan
(86) International Application No :PCT/IB2011/002095
Filing Date :08/09/2011
(87) International Publication No:WO 2012/035395
(61) Patent of Addition to Application Number :NA
Filing Date :NA
(62) Divisional to Application Number :NA
Filing Date :NA

(71)**Name of Applicant :**
1)PANASONIC CORPORATION
Address of Applicant :1006, Oaza Kadoma, Kadoma-Shi, Osaka 571-8501, Japan
(72)**Name of Inventor :**
1)KIDERA Kazunori
2)KAGAWA Takuya
3)TAMURA Hideki
4)NISHINO Hiroyuki
5)NISHI Mariko

(57) Abstract :
Provided is a DC power supply system equipped with a DC power supply and a secondary battery for backup. When the voltage of the DC power supply is lower than the voltage of the secondary battery, the voltage of the DC power supply is raised using power from the secondary battery so that the input voltage to the secondary battery becomes higher than the voltage of the secondary batter, and the secondary battery is charged.

No. of Pages : 38 No. of Claims : 6

(12) PATENT APPLICATION PUBLICATION
(19) INDIA
(22) Date of filing of Application :11/02/2013
(21) Application No.348/KOLNP/2013 A
(43) Publication Date : 05/07/2013

(54) Title of the invention : POWER CONVERSION SYSTEM

(51) International classification :H02M7/497,H02M7/48,H02P27/06
(31) Priority Document No :2010-158419
(32) Priority Date :13/07/2010
(33) Name of priority country :Japan
(86) International Application No :PCT/JP2011/065701
Filing Date :08/07/2011
(87) International Publication No :WO 2012/008381
(61) Patent of Addition to Application Number :NA
Filing Date :NA
(62) Divisional to Application Number :NA
Filing Date :NA

(71)**Name of Applicant :**
1)NISSAN MOTOR CO., LTD.
Address of Applicant :2, TAKARA-CHO, KANAGAWA-KU YOKOHAMA-SHI, KANAGAWA 221-0023, Japan
(72)**Name of Inventor :**
1)YUKIO MIZUKOSHI
2)YUSUKE MINAGAWA
3)KENSUKE SASAKI

(57) Abstract :
A power conversion system as one embodiment of the present invention comprises: a power converter that converts inputted power and outputs power for each of a plurality of phases, using a plurality of legs each of which has an upper arm and a lower arm; and a control apparatus (30) that controls pulse currents flowing through each of the legs, by controlling the upper and lower arms of each of the legs. The control apparatus (30) calculates duty-ratio commands for each of the legs for one control cycle, for each of the phases, and changes the phases of the calculated duty-ratio commands for a first leg and a second leg, among a plurality of legs provided by a phase, such that a period of time wherein a plus pulse current flows through the first leg will overlap with a period of time wherein a minus pulse current flows through the second leg, during one control cycle.

No. of Pages : 33 No. of Claims : 10

(12) PATENT APPLICATION PUBLICATION
(19) INDIA
(22) Date of filing of Application :06/11/2012
(21) Application No.3416/KOLNP/2012 A
(43) Publication Date : 05/07/2013

(54) Title of the invention : FOOTWEAR

(51) International classification :A43B13/12
(31) Priority Document No :61/332,538
(32) Priority Date :07/05/2010
(33) Name of priority country :U.S.A.
(86) International Application No :PCT/US2011/034896
Filing Date :03/05/2011
(87) International Publication No :WO 2011/140017
(61) Patent of Addition to Application Number :NA
Filing Date :NA
(62) Divisional to Application Number :NA
Filing Date :NA

(71)**Name of Applicant :**
1)ARIAT INTERNATIONAL, INC.
Address of Applicant :3242 Whipple Road, Union City, CA 94587 U.S.A.
(72)**Name of Inventor :**
1)MCCARRON, Michael, P.

(57) Abstract :
Footwear according to the present disclosure includes an upper and a sole assembly coupled to the upper, with the sole assembly including an outsole with a ground-contacting surface and a midsole positioned above the outsole. The midsole includes a peripheral lasting member that defines a central aperture, and a cushioning member positioned at least above the peripheral lasting member. In some embodiments the footwear further includes a heel and the midsole includes a heel strike projection that engages the heel. In some embodiments the midsole further includes a shank. In some embodiments, the cushioning member defines the optional heel strike projection and in other embodiments, the optional shank defines the optional heel strike projection. In some embodiments, the footwear includes a spur support.

No. of Pages : 48 No. of Claims : 23

(12) PATENT APPLICATION PUBLICATION
(19) INDIA
(22) Date of filing of Application :06/11/2012
(21) Application No.3417/KOLNP/2012 A
(43) Publication Date : 05/07/2013

(54) Title of the invention : TETRAESTER OF PENTAERYTHRITOL

(51) International classification :C07C69/33,C07C67/08,C10M105/38
(31) Priority Document No :2010-187570
(32) Priority Date :24/08/2010
(33) Name of priority country :Japan
(86) International Application No :PCT/JP2011/065109
Filing Date :30/06/2011
(87) International Publication No :WO 2012/026214
(61) Patent of Addition to Application Number :NA
Filing Date :NA
(62) Divisional to Application Number :NA
Filing Date :NA

(71)**Name of Applicant :**
1)KH Neochem Co., Ltd.
Address of Applicant :2-15, Nihonbashi Muromachi 3-chome, Chuo-ku, Tokyo 1030022 Japan
(72)**Name of Inventor :**
1)INAYAMA ,Toshihiro
2)HIYOSHI, Satoshi
3)AMEMIYA, Nobuhito
4)KISHIMOTO, Shigehisa

(57) Abstract :
Provided is a tetraester of pentaerythritol that is a mixed ester of pentaerythritol and a carboxylic acid comprising isobutyric acid and 3,5,5-trimethylhexanoic acid, has a mole ratio (the ratio: isobutyric acid/3,5,5-trimethylhexanoic acid) of isobutyric acid to 3,5,5-trimethylhexanoic acid in the carboxylic acid that is in the range of 36/64 to 80/20, and is used in refrigeration machine oils and the like having superior compatibility and the like with difluoromethane refrigerant.

No. of Pages : 20 No. of Claims : 2

(12) PATENT APPLICATION PUBLICATION
(19) INDIA
(22) Date of filing of Application :06/11/2012
(21) Application No.3418/KOLNP/2012 A
(43) Publication Date : 05/07/2013

(54) Title of the invention : ELASTOMER COMPOSITION AND STOPPER FOR MEDICAL CONTAINER

(51) International classification :C08L53/02,B65D51/18,C08K3/00
(31) Priority Document No :2010-103342
(32) Priority Date :28/04/2010
(33) Name of priority country :Japan
(86) International Application No :PCT/JP2011/055257
Filing Date :07/03/2011
(87) International Publication No :WO 2011/135927
(61) Patent of Addition to Application Number :NA
Filing Date :NA
(62) Divisional to Application Number :NA
Filing Date :NA

(71)**Name of Applicant :**
1)ARONKASEI CO., LTD.
Address of Applicant :8-6, Nishi-shimbashi 2-chome, Minato-ku, Tokyo 1050003 Japan
(72)**Name of Inventor :**
1)DATE, Noriaki

(57) Abstract :
Provided is a composition for obtaining a molded article having excellent heat resistance, liquid leakage resistance, and needle retainability. An elastomer composition comprises: 10 to 90 parts by mass of a block copolymer (A) having an aromatic vinyl polymer block and a conjugated diene polymer block; 10 to 90 parts by mass of a block copolymer (P) having an aromatic vinyl polymer block and a copolymer block that is primarily a conjugated diene monomer and an aromatic vinyl monomer (the total amount of block copolymer (A) and block copolymer (P) is 100 parts by mass); 100 to 300 parts by mass of a softener (B) having a dynamic viscosity at 40ºC of 50 to 500 cSt; 1 to 50 parts by mass of a propylene polymer (C) having a bending modulus of 1,000 to 3,000 MPa; and 1 to 50 parts by mass of an aromatic polymer (D).

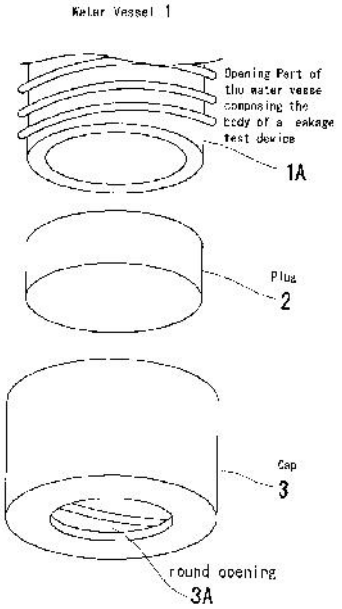

No. of Pages : 38 No. of Claims : 12

(12) PATENT APPLICATION PUBLICATION
(21) Application No.3419/KOLNP/2012 A
(19) INDIA
(22) Date of filing of Application :06/11/2012
(43) Publication Date : 05/07/2013

(54) Title of the invention : SINGLE-COLUMN TRASH COMPACTOR

(51) International classification :B30B1/18,B30B9/30
(31) Priority Document No :RM2010A000251
(32) Priority Date :17/05/2010
(33) Name of priority country :Italy
(86) International Application No :PCT/IT2011/000152
Filing Date :13/05/2011
(87) International Publication No :WO 2011/145124
(61) Patent of Addition to Application Number :NA
Filing Date :NA
(62) Divisional to Application Number :NA
Filing Date :NA

(71)**Name of Applicant :**
1)IACOBUCCI HF ELECTRONICS S.P.A.
Address of Applicant :Loc. Colle Baiocco, snc, I-03013 Ferentino (FR) ITALY
(72)**Name of Inventor :**
1)IACOBUCCI, Lucio

(57) Abstract :
An electromechanical, modular, single column, trash compactor with a particularly small size and low weight. In particular, a trash compaction device which can be used on-board aircraft, trains, ships and/or for civil applications and generally in all the locations and/or transportation means where the auxiliary service equipment must occupy as little space as possible. The compaction device is formed by a system of hollow telescopic screws (5,6), for example of the recirculating ball type, operated by a motor (2) housed inside the said screws (5,6). The compactor may be conveniently installed in compartments, which are fixed or movable on wheels, such as a trolley, so as to allow easy displacement thereof within the transportation means and insertion within the appropriate working spaces.

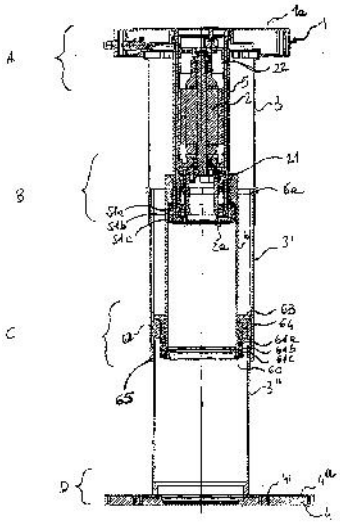

No. of Pages : 29 No. of Claims : 14

(12) PATENT APPLICATION PUBLICATION
(21) Application No.363/KOLNP/2013 A
(19) INDIA
(22) Date of filing of Application :11/02/2013
(43) Publication Date : 05/07/2013

(54) Title of the invention : MODULAR BUILDING SYSTEM

(51) International classification :E04H9/02
(31) Priority Document No :12/803,976
(32) Priority Date :12/07/2010
(33) Name of priority country :U.S.A.
(86) International Application No :PCT/US2011/043659
Filing Date :12/07/2011
(87) International Publication No :WO 2012/009327
(61) Patent of Addition to Application Number :NA
Filing Date :NA
(62) Divisional to Application Number :NA
Filing Date :NA

(71)**Name of Applicant :**
1)PALMERI, RICHARD
Address of Applicant :DANIEL R. SMITH & ASSOCIATES, INC., 7950 CENTRAL INDUSTRIAL DRIVE, SUITE 106, RIVIERA BEACH, FL 33404, U.S.A.
(72)**Name of Inventor :**
1)PALMERI, RICHARD

(57) Abstract :
A modular building system uses a perimeter bond beam and prefabricated wall panels to form an exterior curtain wall. The wall panels are captured within, and may move vertically inside a channel formed in the bond beam. The wall panels are quickly erected by inserting an upper edge of each panel into the channel and swinging the panel onto the foundation where it is claimed in place on the foundation.

No. of Pages : 34 No. of Claims : 25

(12) PATENT APPLICATION PUBLICATION
(21) Application No.3406/KOLNP/2012 A
(19) INDIA
(22) Date of filing of Application :06/11/2012
(43) Publication Date : 05/07/2013

(54) Title of the invention : NICKEL-BASED ALLOY

(51) International classification :C22C19/03
(31) Priority Document No :10 2010 024 488.0
(32) Priority Date :21/06/2010
(33) Name of priority country :Germany
(86) International Application No :PCT/DE2011/001174
Filing Date :08/06/2011
(87) International Publication No :WO 2011/160617
(61) Patent of Addition to Application Number :NA
Filing Date :NA
(62) Divisional to Application Number :NA
Filing Date :NA

(71)**Name of Applicant :**
1)THYSSENKRUPP VDM GMBH
Address of Applicant :Plettenberger Strasse 2, 58791 Werdohl, Germany
(72)**Name of Inventor :**
1)HATTENDORF Heike

(57) Abstract :
Nickel-based alloy consisting of (in % by mass) Si 0.8-2.0%, Al 0.001-0.1%, Fe 0.01-0.2%, C 0.001-0.10%,N 0.0005-0.10%, Mg 0.0001-0.08%,O 0.0001-0.010%, Mn max. 0.10%, Cr max. 0.10%,Cu max. 0.50%, S max. 0.008%, balance Ni and the usual production-related impurities.

No. of Pages : 16 No. of Claims : 23

(12) PATENT APPLICATION PUBLICATION
(21) Application No.3407/KOLNP/2012 A
(19) INDIA
(22) Date of filing of Application :06/11/2012
(43) Publication Date : 05/07/2013

(54) Title of the invention : UPLINK TRANSMISSION APPARATUS AND METHOD FOR MOBILE COMMUNICATION SYSTEM SUPPORTING UPLINK MIMO

(51) International classification	:H04B7/06,H04L27/26,H04L1/16
(31) Priority Document No	:61/334,085
(32) Priority Date	:12/05/2010
(33) Name of priority country	:U.S.A.
(86) International Application No	:PCT/KR2011/003496
Filing Date	:12/05/2011
(87) International Publication No	:WO 2011/142597
(61) Patent of Addition to Application Number	:NA
Filing Date	:NA
(62) Divisional to Application Number	:NA
Filing Date	:NA

(71)**Name of Applicant :**
1)SAMSUNG ELECTRONICS CO., LTD.
Address of Applicant :129, Samsung-ro, Yeongtong-gu Suwon-si, Gyeonggi-do 443-742, REPUBLIC OF KOREA
(72)**Name of Inventor :**
1)YEON Myung Hoon
2)HAN Jin Kyu
3)LEE Ju Ho
4)NAM Young Han
5)ZHANG Jianzhong

(57) Abstract :
A base station includes a transmit path circuitry to transmit an uplink grant to a subscriber station. The uplink grant indicating a first MCS value for a first codeword transmission and a second MCS value for a second codeword transmission. The base station also includes a receive path circuitry configured to receive a MIMO uplink subframe from the subscriber station, the MIMO uplink subframe having a first subset of layers used for the first codeword transmission and a second subset of layers used for the second codeword transmission. ACK/NACK information and RI information are repeated on both the first and second subsets of layers, and CQI is spatially multiplexed on either the first subset or the second subset of layers. If the first MCS value, is different from the second MCS value, the CQI is spatially multiplexed onto the subset of layers having a higher MCS value.

No. of Pages : 90 No. of Claims : 20

(12) PATENT APPLICATION PUBLICATION
(21) Application No.3408/KOLNP/2012 A
(19) INDIA
(22) Date of filing of Application :06/11/2012
(43) Publication Date : 05/07/2013

(54) Title of the invention : ADJUSTMENT DEVICE FOR MOTOR VEHICLE SEATS, IN PARTICULAR HEIGHT ADJUSTMENT DEVICES

(51) International classification :B60N2/16,B60N2/427
(31) Priority Document No :10 2010029129.3
(32) Priority Date :19/05/2010
(33) Name of priority country :Germany
(86) International Application No :PCT/EP2011/055115
Filing Date :01/04/2011
(87) International Publication No :WO 2011/144381
(61) Patent of Addition to Application Number :NA
Filing Date :NA
(62) Divisional to Application Number :NA
Filing Date :NA

(71)**Name of Applicant :**
1)C. ROB. HAMMERSTEIN GMBH & CO. KG
Address of Applicant :Merscheider StraBe 167, 42699 Solingen, Germany
(72)**Name of Inventor :**
1)MAGNUS, Nils
2)GUMBRICH, Markus

(57) Abstract :
The invention relates to an adjustment device for motor vehicle seats, in particular a height adjustment device, comprising a length adjustable control unit which is suitable for adjusting and supporting a seat structure with respect to a seat base assembly and which can be articulated at one end to the seat structure and at the other end to the seat base assembly. In order to provide an adjustment device and a motor vehicle seat comprising an adjustment device, in which a bending direction of the adjustment device is predetermined in the event of a crash, the control unit (1) is designed at one end and/or at both ends to be a pivotable and, in the event of a crash, slidable mounting with respect to the seat structure (2) and/or seat base assembly (3).

No. of Pages : 13 No. of Claims : 9

(12) PATENT APPLICATION PUBLICATION
(21) Application No.3409/KOLNP/2012 A
(19) INDIA
(22) Date of filing of Application :06/11/2012
(43) Publication Date : 05/07/2013

(54) Title of the invention : ELECTROSTATIC PARTICLE INJECTOR FOR RF PARTICLE ACCELERATORS

(51) International classification :H05H7/22
(31) Priority Document No :102010021963.0
(32) Priority Date :28/05/2010
(33) Name of priority country :Germany
(86) International Application No :PCT/EP2011/055202
Filing Date :04/04/2011
(87) International Publication No :WO 2011/147621
(61) Patent of Addition to Application Number :NA
Filing Date :NA
(62) Divisional to Application Number :NA
Filing Date :NA

(71)**Name of Applicant :**
1)SIEMENS AKTIENGESELLSCHAFT
Address of Applicant :Wittelsbacherplatz 2, 80333 München Germany
(72)**Name of Inventor :**
1)HEID Oliver

(57) Abstract :
The present invention relates to a method and a device for injecting charged particles into the first cavity resonator of an RF particle accelerator. An electrode is provided at the entrance to the first cavity resonator, which electrode is connected to a DC voltage source and generates a potential well that accelerates the particles leaving an ion source towards the first cavity resonator. As a result of the ion source and the accelerator path i.e. more particularly the cavity resonators of the accelerator path, lying at a common potential more particularly earth potential, the electrostatic potential well does not contribute to the overall energy of the particles, the overall acceleration effect is brought about by voltage induction in the RF resonator and the DC voltage source is not loaded by the beam current, and so the latter need not be precisely regulated or powerful.

No. of Pages : 20 No. of Claims : 12

(12) PATENT APPLICATION PUBLICATION
(19) INDIA
(22) Date of filing of Application :11/02/2013

(21) Application No.362/KOLNP/2013 A
(43) Publication Date : 05/07/2013

(54) Title of the invention : STEAM GENERATION DEVICE FOR AUTOMATIC WATER SUPPLY USING SELF VAPOR PRESSURE

(51) International classification :F22B35/08,F22B33/18,F22B35/12
(31) Priority Document No :10-2010-0068545
(32) Priority Date :15/07/2010
(33) Name of priority country :Republic of Korea
(86) International Application No :PCT/KR2011/005010
Filing Date :08/07/2011
(87) International Publication No :WO 2012/008715
(61) Patent of Addition to Application Number :NA
Filing Date :NA
(62) Divisional to Application Number :NA
Filing Date :NA

(71)**Name of Applicant :**
1)YIM , JOO- HYUK
Address of Applicant :#203-802 SAEMMEORI APT, 908 DUNSAN-DONG, SEO-GU, DAEJEON 302-777, KOREA
(72)**Name of Inventor :**
1)YIM ,JOO- HYUK

(57) Abstract :
The present invention relates to a steam generation device for automatic water supply using self vapor pressure that continuously generates necessary steam while smoothly supplying water to a steam tank by using a self vapor pressure stored in the steam tank as well as minimizes heat loss in a process of generating steam to outside thereby reducing energy consumed in generating steam, and more particularly, to a steam generation device for automatic water supply using self vapor pressure that supplies water more smoothly through a control method of opening a water supply pressure tank only after the water supply pressure tank is supplied with sufficient vapor pressure.

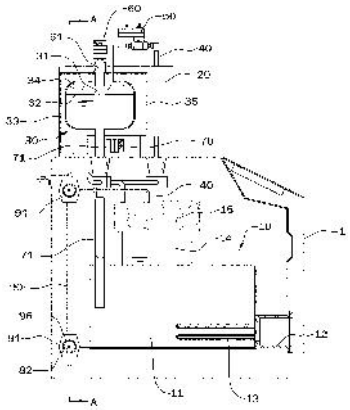

No. of Pages : 18 No. of Claims : 6

(12) PATENT APPLICATION PUBLICATION
(19) INDIA
(22) Date of filing of Application :28/01/2013
(21) Application No.230/KOLNP/2013 A
(43) Publication Date : 05/07/2013

(54) Title of the invention : VEHICLE WITH SOUND WAVE REFLECTOR

(51) International classification :B60R 11/02
(31) Priority Document No :61/369,265
(32) Priority Date :30/07/2010
(33) Name of priority country :U.S.A.
(86) International Application No :PCT/EP2011/062991
Filing Date :28/07/2011
(87) International Publication No :WO 2012/013744
(61) Patent of Addition to Application Number :NA
Filing Date :NA
(62) Divisional to Application Number :NA
Filing Date :NA

(71)**Name of Applicant :**
1)FRAUNHOFER-GESELLSCHAFT ZUR FOERDERUNG DER ANGEWANDTEN FORSCHUNG E.V.
Address of Applicant :HansastraBe 27c, 80686 Muenchen, Germany
(72)**Name of Inventor :**
1)SILZLE, Andreas
2)HEISE, Ulrik
3)VARGA, Stefan
4)LANG, Matthias
5)HELLMUTH, Oliver

(57) Abstract :
Embodiments disclose a vehicle which comprises a vehicle ceiling having a first sound wave reflection portion having a first sound wave reflection characteristic and a second portion having a second sound wave reflection characteristic, wherein the first sound wave reflection portion is more sound wave reflecting than the second sound wave reflection portion and at least one speaker arranged in the vehicle, so that a main sound emission direction is directed to the first sound wave reflection portion, so that a sound wave emitted by the speaker and reflected by the first sound wave reflection portion is perceptible as a diffuse sound by a person in the vehicle.

No. of Pages : 19 No. of Claims : 20

(12) PATENT APPLICATION PUBLICATION
(19) INDIA
(22) Date of filing of Application :29/01/2013
(21) Application No.247/KOLNP/2013 A
(43) Publication Date : 05/07/2013

(54) Title of the invention : A METHOD FOR GENERATING A MEDIA PRESENTATION AT A CLIENT

(51) International classification :H04N
(31) Priority Document No :10/098,157
(32) Priority Date :14/03/2002
(33) Name of priority country :U.S.A.
(86) International Application No :PCT/US2003/07965
Filing Date :14/03/2003
(87) International Publication No :WO/2003/079212
(61) Patent of Addition to Application Number :NA
Filing Date :NA
(62) Divisional to Application Number :1311/KOLNP/2004
Filed on :08/09/2004

(71)**Name of Applicant :**
1)CITRIX SYSTEMS, INC.
Address of Applicant :851 W.CYPRESS CREEK ROAD, FORT LAUDERDALE, FL 33309 U.S.A.
(72)**Name of Inventor :**
1)ROBINSON, DAVID
2)LABORCZFALVI, LEE
3)SEMAAN, PIERRE
4)ROYCHOUDHRY, ANIL
5)DUURSMA, MARTIN
6)PANASYUK, ANATOLIY

(57) Abstract :
A method for generating a media presentation at a client, the method comprises: transmitting output from an application program executing on a server to the client; identifying a media stream within the application output; intercepting an original compressed data set representing at least a portion of the media stream before processing by the application program; and transmitting the original compressed data set to the client.

No. of Pages : 35 No. of Claims : 30

(12) PATENT APPLICATION PUBLICATION
(21) Application No.299/KOLNP/2013 A
(19) INDIA
(22) Date of filing of Application :04/02/2013
(43) Publication Date : 05/07/2013

(54) Title of the invention : METHOD FOR THE VERIFIABLE DELIVERY OF AN ARTICLE

(51) International classification :B07C3/14,B07C3/18,G07B17/00
(31) Priority Document No :10 2010 034 356.0
(32) Priority Date :16/08/2010
(33) Name of priority country :Germany
(86) International Application No :PCT/EP2011/063659
Filing Date :09/08/2011
(87) International Publication No :WO 2012/022654
(61) Patent of Addition to Application Number :NA
Filing Date :NA
(62) Divisional to Application Number :NA
Filing Date :NA

(71)**Name of Applicant :**
1)SIEMENS AKTIENGESELLSCHAFT
Address of Applicant :Wittelsbacherplatz 2, 80333 München, Germany
(72)**Name of Inventor :**
1)WILKE Wolf-Stephan
2)ZETTLER Michael

(57) Abstract :
The invention relates to a method for delivering an item (P) to a target point (Add). This item is a distinguishable item. A data set for the item (P) is generated in a central data storage unit. This data set comprises identification feature values for said item (P). The item (P) is conveyed to a predetermined target point (Add). At said target point (Add), the item (P) is provided, at least temporarily, with an optically detectable delivery marking (PA). At least one computer accessible image (Abb) of the item (P) is generated by means of a portable image recording device (tKa). This image (Abb) shows the item (P) together with the delivery marking (PA). With the aid of the image (Abb), the data set for the item, which is stored in the central data storage unit, is determined. This data set is supplemented with a computer accessible marking of the delivery.

No. of Pages : 50 No. of Claims : 9

(12) PATENT APPLICATION PUBLICATION
(19) INDIA
(22) Date of filing of Application :06/02/2013
(21) Application No.316/KOLNP/2013 A
(43) Publication Date : 05/07/2013

(54) Title of the invention : METHOD FOR PRODUCING WAXES AND GREASE BASE STOCKS THROUGH CATALYTIC DEPOLYMERISATION OF WASTE PLASTICS

(51) International classification :C07C4/08,C08J11/04
(31) Priority Document No :12/836,564
(32) Priority Date :15/07/2010
(33) Name of priority country :U.S.A.
(86) International Application No :PCT/IB2011/001642
Filing Date :14/07/2011
(87) International Publication No :WO 2012/007833
(61) Patent of Addition to Application Number :NA
Filing Date :NA
(62) Divisional to Application Number :NA
Filing Date :NA

(71)**Name of Applicant :**
1)GREENMANTRA RECYCLING TECHNOLOGIES LTD.
Address of Applicant :1103, 373 Front Street (W), Toronto, Ontario M5V 3R7 Canada
(72)**Name of Inventor :**
1)KUMAR, Anil
2)KUMAR, Pushkar

(57) Abstract :
A process of depolymerization of mixed polyethylene waste is disclosed. In one embodiment, in a process for converting mixed polyethylene waste to make waxes and grease base stocks through catalytic depolymerization the mixed polyethylene waste is preheated to form a molten mixed polyethylene waste. Then depolymerization reaction of the molten mixed polyethylene waste is started. The depolymerization reaction uses a catalyst in a high pressure reactor with heaters at a desired temperature. The catalyst is disposed on a stirring blade. Progression of depolymerization reaction of the molten mixed polyethylene waste is allowed to continue until a pressure in the high pressure reactor reaches a desired value. The heaters are turned off and depolymerization reaction of the molten mixed polyethylene waste is stopped upon the pressure in the reactor reaching desired value. The mixed polyethylene waste is converted to waxes or grease base stocks.

No. of Pages : 37 No. of Claims : 30

(12) PATENT APPLICATION PUBLICATION
(21) Application No.375/KOLNP/2013 A
(19) INDIA
(22) Date of filing of Application :13/02/2013
(43) Publication Date : 05/07/2013

(54) Title of the invention : BATTERY STATE ESTIMATING DEVICE AND BATTERY STATE ESTIMATING METHOD

(51) International classification :G01R31/36
(31) Priority Document No :2010-162738
(32) Priority Date :20/07/2010
(33) Name of priority country :Japan
(86) International Application No :PCT/JP2011/066374
Filing Date :19/07/2011
(87) International Publication No :WO 2012/011472
(61) Patent of Addition to Application Number :NA
Filing Date :NA
(62) Divisional to Application Number :NA
Filing Date :NA

(71)**Name of Applicant :**
1)NISSAN MOTOR CO., LTD.
Address of Applicant :2, TAKARA-CHO KANAGAWA-KU, YOKOHAMA-SHI, KANAGAWA 221-0023 Japan
(72)**Name of Inventor :**
1)KAZUHIKO TAZOE
2)HIDEO NAKAMURA
3)SHIHO UMEKI

(57) Abstract :
A battery state estimating apparatus, which is an embodiment of the invention, detects the current and terminal voltage of a secondary battery; uses the measurement values (I(k), V(k)) of the detected current and terminal voltage to estimate a terminal value of the secondary battery based on a predetermined battery model; and successively identifies a parameter (φ(k)) of the battery model such that the difference between the value based on the measurement value of the terminal voltage and the estimated value of the terminal voltage converges to zero. When a particular one (φn) of the identified parameters is equal to or greater than a predetermined first threshold value (δ1), then an upper limitation is performed such that the value of the particular parameter (φn) is set to the first threshold value (δ1).

No. of Pages : 41 No. of Claims : 17

(12) PATENT APPLICATION PUBLICATION
(19) INDIA
(22) Date of filing of Application :30/01/2013
(21) Application No.258/KOLNP/2013 A
(43) Publication Date : 05/07/2013

(54) Title of the invention : MILLING CUTTER AND CUTTING INSERT HAVING REAR PROTUBERANCE THEREFOR

(51) International classification :B23C5/10,B23C5/22
(31) Priority Document No :208253
(32) Priority Date :19/09/2010
(33) Name of priority country :Israel
(86) International Application No :PCT/IL2011/000594
Filing Date :24/07/2011
(87) International Publication No :WO 2012/035529
(61) Patent of Addition to Application Number :NA
Filing Date :NA
(62) Divisional to Application Number :NA
Filing Date :NA

(71)**Name of Applicant :**
1)ISCAR LTD.,
Address of Applicant :P.O. Box 11, 24959 Tefen, Israel Israel
(72)**Name of Inventor :**
1)MEN, Yuri

(57) Abstract :
A cutting insert (24) for mounting in a socket on an insert holder (22) of a milling cutter (20). The cutting insert has opposing top and bottom surfaces and a peripheral surface extending therebetween, forming one or two cutting edges. The peripheral surface has a front arcuate surface and a rear surface. The rear surface has a protuberance that extends in a direction away from a central region of the front surface. The protuberance is located in the socket. The socket includes a first socket side abutment surface for providing primarily axial support for the cutting insert against cutting forces acting in an axial rearward direction during a milling operation.

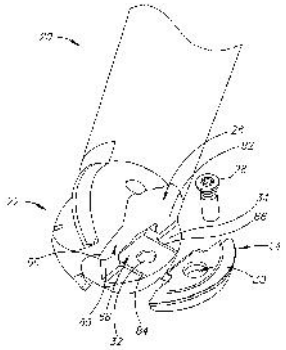

No. of Pages : 22 No. of Claims : 16

(12) PATENT APPLICATION PUBLICATION
(19) INDIA
(22) Date of filing of Application :31/01/2013
(21) Application No.275/KOLNP/2013 A
(43) Publication Date : 05/07/2013

(54) Title of the invention : DISPERSE DYE MIXTURES, THEIR PREPARATION AND USE

(51) International classification :C09B67/22,C09B67/38,D06P3/54
(31) Priority Document No :10 2011 008 683.8
(32) Priority Date :15/01/2011
(33) Name of priority country :Germany
(86) International Application No :PCT/EP2012/000049
Filing Date :07/01/2012
(87) International Publication No :WO 2012/095284
(61) Patent of Addition to Application Number :NA
Filing Date :NA
(62) Divisional to Application Number :NA
Filing Date :NA

(71)**Name of Applicant :**
1)DYSTAR COLOURS DISTRIBUTION GMBH
Address of Applicant :Industriepark Hchst, Gebude B 598, 65926 Frankfurt am Main, Germany
(72)**Name of Inventor :**
1)ARNOLD, Markus
2)MURGATROYD, Adrian
3)GRUND, Clemens
4)GÖRLITZ, Gunter
5)LIEBIG, Timo

(57) Abstract :
The present invention relates to dye mixtures containing at least one dye of formula (I) and at least either a dye of formula (II) and/or at least one dye of formula (III) where R1-R15, n, o, X and D1-D3 are each as defined in claim 1. These dye mixtures are useful for dyeing or printing hydrophobic materials in particular.

No. of Pages : 46 No. of Claims : 16

(12) PATENT APPLICATION PUBLICATION
(19) INDIA
(22) Date of filing of Application :04/02/2013
(21) Application No.295/KOLNP/2013 A
(43) Publication Date : 05/07/2013

(54) Title of the invention : SWITCH FOR PREVENTING INRUSH CURRENT SHOCK AND CUTTING OFF STANDBY POWER

(51) International classification	:H01H13/00,H01H13/14,H01R13/70
(31) Priority Document No	:10-2010-0073855
(32) Priority Date	:30/07/2010
(33) Name of priority country	:Republic of Korea
(86) International Application No	:PCT/KR2011/005549
Filing Date	:28/07/2011
(87) International Publication No	:WO 2012/015246
(61) Patent of Addition to Application Number	:NA
Filing Date	:NA
(62) Divisional to Application Number	:NA
Filing Date	:NA

(71)**Name of Applicant :**
1)KIM, Byeongho
Address of Applicant :#106-702, Byeoksan Apt., 510-27, Dongsam 1-dong, Yeongdo-gu, Busan 606-755, Korea
(72)**Name of Inventor :**
1)KIM, Byeongho

(57) Abstract :
The present invention is provided with a delay unit for applying a function of a double pole contact switch and a control function of an activation switch, so as for the contact switch and the activation switch not to operate simultaneously when turned on. Accordingly, when a predetermined time elapses after the double pole contact switch operates first to prevent an inrush current shock, the activation switch generates a control signal to safely operate an internal circuit such as a central processing device or a control device, so that an electronic product is turned on without an electrical shock or a significant spark. Moreover, if power is cut off by software or the internal circuit is turned off in response to a control signal of the activation switch after an ON button of the electronic product is pressed the double pole contact switch is automatically turned off immediately or over a time interval so that standby power is cut off completely safely, conveniently, and effectively.

No. of Pages : 33 No. of Claims : 3

(12) PATENT APPLICATION PUBLICATION
(19) INDIA
(22) Date of filing of Application :07/02/2013
(21) Application No.332/KOLNP/2013 A
(43) Publication Date : 05/07/2013

(54) Title of the invention : SEMICONDUCTING POLYMERS

(51) International classification :C07D495/04,C08G61/12,H01L51/42
(31) Priority Document No :10007056.4
(32) Priority Date :08/07/2010
(33) Name of priority country :EPO
(86) International Application No :PCT/EP2011/002928
Filing Date :14/06/2011
(87) International Publication No :WO 2012/003919
(61) Patent of Addition to Application Number :NA
Filing Date :NA
(62) Divisional to Application Number :NA
Filing Date :NA

(71)**Name of Applicant :**
1)MERCK PATENT GMBH
Address of Applicant :Frankfurter Strasse 250, 64293 Darmstadt, Germany
(72)**Name of Inventor :**
1)BLOUIN, Nicolas
2)MITCHELL, William
3)CARRASCO-OROZCO, Miguel
4)MEYER, Frank Egon
5)TIERNEY, Steven

(57) Abstract :
The invention relates to novel polymers containg repeating units based on thieno[3,4-b]thiophene, monomers and methods for their preparation, their use as semiconductors in organic electronic (OE) devices, especially in organic photovoltaic (OPV) devices, and to OE and OPV devices comprising these polymers.

No. of Pages : 59 No. of Claims : 15

(12) PATENT APPLICATION PUBLICATION
(21) Application No.390/KOLNP/2013 A
(19) INDIA
(22) Date of filing of Application :14/02/2013
(43) Publication Date : 05/07/2013

(54) Title of the invention : HIGH-STRENGTH COLD- ROLLED STEEL SHEET HAVING EXCELLENT STRETCH FLANGEABILITY AND METHOD FOR MANUFACTURING THE SAME

(51) International classification :C22C38/00,C21D9/46,C22C38/14
(31) Priority Document No :2010-199040
(32) Priority Date :06/09/2010
(33) Name of priority country :Japan
(86) International Application No :PCT/JP2011/070665
Filing Date :05/09/2011
(87) International Publication No :WO 2012/033210
(61) Patent of Addition to Application Number :NA
Filing Date :NA
(62) Divisional to Application Number :NA
Filing Date :NA

(71)**Name of Applicant :**
1)JFE STEEL CORPORATION
Address of Applicant :2-3,UCHISAIWAI-CHO 2-CHOME,CHIYODA-KU TOKYO 100-0011 Japan
(72)**Name of Inventor :**
1)KAWABE, HIDETAKA
2)NISHIZAWA , MASANORI
3)SETO,KAZUHIRO

(57) Abstract :
The present invention provides: a high-strength cold-rolled steel sheet which has excellent stretch flange properties and which has a chemical composition comprising, in mass%, 0.050- 0.090% of C:, 0.05% or less of Si, 1.5-2.0% of Mn, 0.030% or less of P, 0.0050% or less of S, 0.005-0.1% of Al, 0.01% or less of N, 0.005-0.050% of Ti, 0.020-0.080% of Nb and a remainder made up by Fe and unavoidable impurities, has a tissue composed of, in vol%, 50-77% of a ferrite phase, 20-50% of a bainite phase, 2-10% of a martensite phase and 1-5% of a residual austenite phase, and has such high strength that the tensile strength (TS) is 590 MPa or more, a strength-elongation balance (TS×El) of 16000 MPa% or more and a strength-(hole expanding ratio) balance (TS×λ) of 40000 MPa% or more; and a process for producing the high-strength cold-rolled steel sheet.

No. of Pages : 63 No. of Claims : 4

(12) PATENT APPLICATION PUBLICATION
(19) INDIA
(22) Date of filing of Application :01/11/2012
(21) Application No.3330/KOLNP/2012 A
(43) Publication Date : 05/07/2013

(54) Title of the invention : MULTIPLE-INPUT MULTIPLE-OUTPUT COMMUNICATION SYSTEM USING CODEBOOK CORRESPONDING TO EACH REPORTING MODE

(51) International classification :H04B7/04,H03M13/00
(31) Priority Document No :61/329,634
(32) Priority Date :30/04/2010
(33) Name of priority country :U.S.A.
(86) International Application No :PCT/KR2011/003272
Filing Date :02/05/2011
(87) International Publication No :WO 2011/136627
(61) Patent of Addition to Application Number :NA
Filing Date :NA
(62) Divisional to Application Number :NA
Filing Date :NA

(71)**Name of Applicant :**
1)SAMSUNG ELECTRONICS CO. LTD.
Address of Applicant :129,Samsung-ro Yeongtong gu, Suwon-si, Gyeonggi-do 443-742,Republic of Korea
(72)**Name of Inventor :**
1)HOI,Jun Il
2)CLERCKX Bruno
3)KIM,Ki Il

(57) Abstract :
A multiple input multiple output (MIMO) communication system using a first codebook and a second codebook is provided. The first codebook and the second codebook may independently exist or may exist in a form of an overall codebook in which the first codebook and the second codebook are integrated with each other. A receiver may extract a first precoding matrix indicator from the first codebook and may extract a second precoding matrix indicator from the second codebook. The receiver may also extract the first precoding matrix indicator and the second precoding matrix indicator from the overall codebook. The first precoding matrix indicator and the second precoding matrix indicator may be fed back to a transmitter. The transmitter may determine a precoding matrix based on the first precoding matrix indicator and the second precoding matrix indicator.

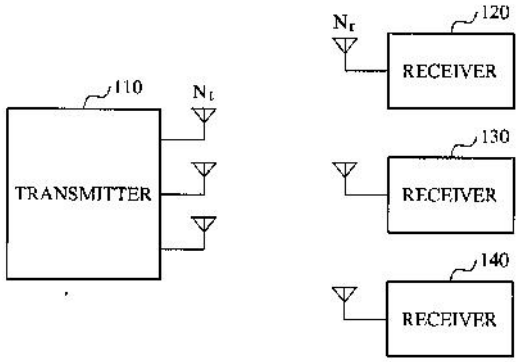

No. of Pages : 379 No. of Claims : 8

(12) PATENT APPLICATION PUBLICATION
(21) Application No.353/KOLNP/2013 A
(19) INDIA
(22) Date of filing of Application :11/02/2013
(43) Publication Date : 05/07/2013

(54) Title of the invention : SYSTEM AND METHOD FOR GROWING PLANTS

(51) International classification :A01G9/02
(31) Priority Document No :1012087.1
(32) Priority Date :19/07/2010
(33) Name of priority country :U.K.
(86) International Application No :PCT/GB2011/051346
Filing Date :18/07/2011
(87) International Publication No :WO 2012/010876
(61) Patent of Addition to Application Number :NA
Filing Date :NA
(62) Divisional to Application Number :NA
Filing Date :NA

(71)**Name of Applicant :**
1)FISHER, ALEXANDER, P
Address of Applicant :175 METCHLEY LANE, HARBORNE, BIRMINGHAM WEST MIDLANDS B17 0JL, U.K.
(72)**Name of Inventor :**
1)FISHER, ALEXANDER, P

(57) Abstract :
This invention concerns apparatus for growing plants comprising a column (100) of pots (102) stacked one above the other to define an enclosure for housing plants. Each pot (102) defines a chamber (104) for holding a plant. Separators for separating pots of the column are provided and the separators define an enclosed headspace around a top of at least two of the pots where plants project from the chamber. The chamber comprises a passageway (106) that provides a continuous flow path for air through the column (100) without requiring the air to flow through the chamber (104). This flow path includes the headspaces above the at least two of the pots (102).

No. of Pages : 32 No. of Claims : 24

(12) PATENT APPLICATION PUBLICATION
(19) INDIA
(22) Date of filing of Application :12/02/2013
(21) Application No.372/KOLNP/2013 A
(43) Publication Date : 05/07/2013

(54) Title of the invention : SLIDER AND HISTORY FIELD FOR SMART CHAT SESSIONS

(51) International classification :G06F3/00
(31) Priority Document No :61/366,843
(32) Priority Date :22/01/2010
(33) Name of priority country :U.S.A.
(86) International Application No :PCT/US2011/045079
Filing Date :22/07/2011
(87) International Publication No :WO 2012/012763
(61) Patent of Addition to Application Number :NA
Filing Date :NA
(62) Divisional to Application Number :NA
Filing Date :NA

(71)**Name of Applicant :**
1)24/7 CUSTOMER, INC.
Address of Applicant :910 EAST HAMILTON AVENUE, SUITE 240, CAMPBELL, CA 95008 U.S.A.
(72)**Name of Inventor :**
1)KANNAN , PALLIPURAM, V.
2)JAIN , MOHIT

(57) Abstract :
A context sensitive slider content area provides a slide out mechanism that is automatically actuated when additional information is needed during a chat session between an agent and a visitor, e.g. where a pre chat and/or exit form is to be completed. The context sensitive slide out content area also provides problem resolution information to the visitor to help in solving problems, e.g. the top five problems; and also provides a self-service step-by-step wizard. A history section is provided with which the visitor can track back all previous steps carried out within the smart client. A history bar provides an iconic representation of all previous activities. A technique is also disclosed for executing various actions, such as form filling or requests for additional services, in a chat session.

No. of Pages : 31 No. of Claims : 21

(12) PATENT APPLICATION PUBLICATION
(19) INDIA
(22) Date of filing of Application :14/02/2013
(21) Application No.391/KOLNP/2013 A
(43) Publication Date : 05/07/2013

(54) Title of the invention : THE FSTP EXPERT SYSTEM

(51) International classification :G06N5/04,G06F17/30
(31) Priority Document No :61/374,312
(32) Priority Date :17/08/2010
(33) Name of priority country :U.S.A.
(86) International Application No :PCT/EP2011/063295
Filing Date :02/08/2011
(87) International Publication No :WO 2012/022612
(61) Patent of Addition to Application Number :NA
Filing Date :NA
(62) Divisional to Application Number :NA
Filing Date :NA

(71)**Name of Applicant :**
1)SIGRAM SCHINDLER BETEILIGUNGSGESELLSCHAFT MBH
Address of Applicant :ERNST-REUTER-PLATZ 8, 10587 BERLIN Germany
(72)**Name of Inventor :**
1)SCHINDLER, SIGRAM

(57) Abstract :
Be TT.p the technique teaching of a patent or venture, RS a reference set of prior art technique teachings TT.i, any element of any TT described by its properties and all this information be presented as meaningful items. Then the FSTP Expert System supports managing an analysis of TT.p over RS such that it is able to reply automatically and instantly to any query for any item in this information. These answers may describe any interrelation between any items or properties/facts or comment on such interrelations or on some insights into them achieved while generating these items by or interactively with the FSTP Expert System. By formalization of these properties it also supports determining the value of q dependably indicating TT.p as trivial/obvious over RS iff q=0 and for q>0 showing the creative height of TT.p over RS and quantifying the undeniable power of this indication. I.e.: It then i) determines by q the minimal factual creativity of a patent (or of an ordinary/green/health/trademark /copyright -venture) over prior art and ii) allows instantly to reply to any queries concerning i).

No. of Pages : 87 No. of Claims : 16

(12) PATENT APPLICATION PUBLICATION
(19) INDIA
(22) Date of filing of Application :08/02/2013
(21) Application No.336/KOLNP/2013 A
(43) Publication Date : 05/07/2013

(54) Title of the invention : SYSTEM OF EJECTING A SLIDING DOOR.

(51) International classification :E05D15/10
(31) Priority Document No :61/365,431
(32) Priority Date :19/07/2010
(33) Name of priority country :U.S.A.
(86) International Application No :PCT/IL2011/000572
Filing Date :19/07/2011
(87) International Publication No :WO 2012/011099
(61) Patent of Addition to Application Number :NA
Filing Date :NA
(62) Divisional to Application Number :NA
Filing Date :NA

(71)**Name of Applicant :**
1)HARDOOR TOP DESIGN & TECHNOLOGY LTD
Address of Applicant :22 Plutitzki Street, 75361 Rishon-LeZion (IL) Israel
(72)**Name of Inventor :**
1)HALFON, Amos
2)HARARI, Mordechai

(57) Abstract :
A system of ejecting a sliding door of a closet, comprising a plurality of ejection assemblies and a connecting mechanism, which connects one assembly to the other. Each ejection assembly comprises a rail and a slidable member configured to slide along the rail, where the rail engages with a frame of the closet. The connecting mechanism allows synchronizing the ejection force applied upon the door at different locations of the door, by connecting the ejection assemblies through the connecting mechanism. This configuration allows ejecting and retrieving of the door outwardly and inwardly by sliding the slidable member of each assembly along the rail.

No. of Pages : 36 No. of Claims : 19

(12) PATENT APPLICATION PUBLICATION
(19) INDIA
(22) Date of filing of Application :13/02/2013
(21) Application No.374/KOLNP/2013 A
(43) Publication Date : 05/07/2013

(54) Title of the invention : HYDROSTATIC FINGER CUFF FOR BLOOD WAVE FORM ANALYSIS AND DIAGNOSTIC SUPPORT

(51) International classification :A61B5/022
(31) Priority Document No :61/372,663
(32) Priority Date :11/08/2010
(33) Name of priority country :U.S.A.
(86) International Application No :PCT/US2011/047461
Filing Date :11/08/2011
(87) International Publication No :WO 2012/021731
(61) Patent of Addition to Application Number :NA
Filing Date :NA
(62) Divisional to Application Number :NA
Filing Date :NA

(71)**Name of Applicant :**
1)EMPIRICAL TECHNOLOGIES CORPORATION
Address of Applicant :3050 BERKMAR DRIVE, CHARLOTTESVILLE, VA 22901 U.S.A.
(72)**Name of Inventor :**
1)GERDT,DAVID
2)ADKINS, CHARLES
3)BARUCH, MARTIN

(57) Abstract :
A hydrostatic finger cuff for blood flow property analysis is provided which includes an elongated substrate member which has a pair of opposing long edges and a pair of opposing short edges. The hydrostatic finger cuff is configured to form a frustoconical shell when the ends of the cuff are overlapped and releasably connected together. The interior of the frustoconical shell conforms to the shape of the middle phalange of a finger and the first phalange of a thumb. ODavne side of the elongated member has an inflatable member that has a pressurizable interior region. A tube is fixed to the inflatable member and is in pneumatic communication with the interior of the inflatable member inflatable to a maximum of no more than 60 mmHg. The inflatable member completely circumscribes the finger and provides substantially uniform contact across the entire length of a phalange, in particular, the middle phalange of the middle finger. A pressure relief member is in fluid communication with the inflatable member, and is set to open and release pressure at a pressure level no higher than 1.2 psi.

No. of Pages : 40 No. of Claims : 23

(12) PATENT APPLICATION PUBLICATION
(19) INDIA
(22) Date of filing of Application :13/12/2012
(21) Application No.3926/KOLNP/2012 A
(43) Publication Date : 05/07/2013

(54) Title of the invention : DISPOSABLE DIAPER

(51) International classification :A61F13/15
(31) Priority Document No :2010-149836
(32) Priority Date :30/06/2010
(33) Name of priority country :Japan
(86) International Application No :PCT/JP2011/003415
Filing Date :15/06/2011
(87) International Publication No :WO 2012/001895
(61) Patent of Addition to Application Number :NA
Filing Date :NA
(62) Divisional to Application Number :NA
Filing Date :NA

(71)**Name of Applicant :**
1)LIVEDO CORPORATION
Address of Applicant :45-2, Handaotsu, Kanadacho, Shikokuchuo-shi, Ehime, 7990122 Japan
(72)**Name of Inventor :**
1)NAKAOKA, Kenji
2)TAKAHASHI, Yuki
3)AMANO, Emi

(57) Abstract :
An outer covering sheet (4) of a pants-type disposable diaper (1) has a front part and a back part (403) to be positioned on a front side and a back side of a wearer, and a middle part lying between the both. An absorbent body (20) is attached on the outer covering sheet (4), to absorb excrement from the wearer. In the absorbent body (20), both end portions positioned in the front part and the back part (403) are folded toward the inner surface (40) of the outer covering sheet (4) to be bonded on the inner surface (40). It is therefore possible to prevent skin of the wearer from being irritated by edges (241) of the both end portions of the absorbent body (20) when the disposable diaper (1) is worn.

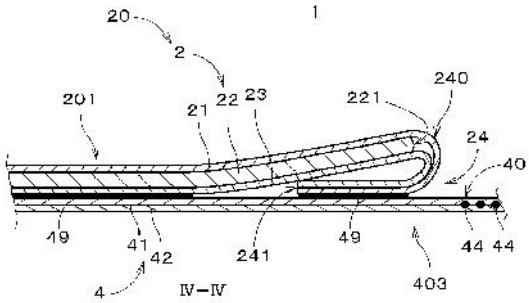

No. of Pages : 24 No. of Claims : 9

(12) PATENT APPLICATION PUBLICATION
(19) INDIA
(22) Date of filing of Application :13/12/2012
(21) Application No.3927/KOLNP/2012 A
(43) Publication Date : 05/07/2013

(54) Title of the invention : MIXED BEVERAGE PREPARATION AND DISPENSING

(51) International classification :B67D1/00,B67D1/12,B67D1/08
(31) Priority Document No :NA
(32) Priority Date :NA
(33) Name of priority country :NA
(86) International Application No:PCT/NL2010/050455
Filing Date :14/07/2010
(87) International Publication No :WO 2012/008825
(61) Patent of Addition to Application Number :NA
Filing Date :NA
(62) Divisional to Application Number :NA
Filing Date :NA

(71)**Name of Applicant :**
1)MDS GLOBAL HOLDING LTD.
Address of Applicant :6, Thornton Street, Sliema, SLM 3150 Malta
(72)**Name of Inventor :**
1)SCHÖLVINCK, Michiel Olivier
2)STERNGOLD, Edouard

(57) Abstract :
A water dispensing device comprises water dispensing means for dispensing water into a serving container. The device furthermore comprises a control unit which is connected with the water dispensing means to control a water dispensing cycle in which a predetermined amount of water is dispensed in the serving container. The control unit is programmed such that the water dispensing cycle includes at least two stages which are separated by an intermediate time period in which no water is dispensed in the serving container.

No. of Pages : 20 No. of Claims : 23

(12) PATENT APPLICATION PUBLICATION
(19) INDIA
(22) Date of filing of Application :13/12/2012
(21) Application No.3928/KOLNP/2012 A
(43) Publication Date : 05/07/2013

(54) Title of the invention : GEMINI VIRUS REPLICATION INHIBITOR

(51) International classification :C12N15/09,A01H1/00,A01H5/00
(31) Priority Document No :2010-129682
(32) Priority Date :07/06/2010
(33) Name of priority country :Japan
(86) International Application No :PCT/JP2011/062891
Filing Date :06/06/2011
(87) International Publication No :WO 2011/155426
(61) Patent of Addition to Application Number :NA
Filing Date :NA
(62) Divisional to Application Number :NA
Filing Date :NA

(71)**Name of Applicant :**
1)SERA Takashi
Address of Applicant :3-2-104, Tsushima-Naka 1-chome, Kita-ku, Okayama-shi, Okayama 7000082 Japan
(72)**Name of Inventor :**
1)SERA Takashi

(57) Abstract :
An agent for inhibiting the replication of a gemini virus, which is a replication inhibitor comprising a zinc finger protein capable of binding specifically to at least the full length of stem loop region DNA of a gemini virus or a part of the full length and capable of inhibiting the formation of a stem loop structure.

No. of Pages : 54 No. of Claims : 15

(12) PATENT APPLICATION PUBLICATION
(21) Application No.188/KOL/2011 A
(19) INDIA
(22) Date of filing of Application :14/02/2011
(43) Publication Date : 05/07/2013

(54) Title of the invention : A DEVICE FOR PREPARING IRON MESH

(51) International classification :E21D19/00
(31) Priority Document No :NA
(32) Priority Date :NA
(33) Name of priority country :NA
(86) International Application No :NA
Filing Date :NA
(87) International Publication No : NA
(61) Patent of Addition to Application Number :NA
Filing Date :NA
(62) Divisional to Application Number :NA
Filing Date :NA

(71)**Name of Applicant :**
1)NONGTHOMBAM KUMAR SINGH
Address of Applicant :WANGJING SK LEIKEI, WANGJING DIST-THOUBAL, MANIPUR-795148, Manipur India
(72)**Name of Inventor :**
1)NONGTHOMBAM KUMAR SINGH

(57) Abstract :
A device for making mesh , said machine comprising: a frame (12) having at least four legs, each leg having a wheel (11) attached to it; at least two harnesses (13) each having a set of heddles (14); at least one handle (17) configured to control each harness; and a comb (18) attached to a slidable frame (19).

No. of Pages : 14 No. of Claims : 8

(12) PATENT APPLICATION PUBLICATION
(21) Application No.188/KOLNP/2013 A
(19) INDIA
(22) Date of filing of Application :22/01/2013
(43) Publication Date : 05/07/2013

(54) Title of the invention : HIGH STRENGTH HOT-ROLLED STEEL SHEET HAVING EXCELLENT FORMABILITY AND A METHOD FOR MANUFACTURING THE SAME

(51) International classification :C22C38/14,C21D8/02,C21D9/46
(31) Priority Document No :2010-179246
(32) Priority Date :10/08/2010
(33) Name of priority country :Japan
(86) International Application No :PCT/JP2011/068494
Filing Date :09/08/2011
(87) International Publication No :WO 2012/020847
(61) Patent of Addition to Application Number :NA
Filing Date :NA
(62) Divisional to Application Number :NA
Filing Date :NA

(71)**Name of Applicant :**
1)JFE STEEL CORPORATION,
Address of Applicant :2-3, Uchisaiwai-cho 2-chome, Chiyoda-ku, Tokyo 100-0011 Japan
(72)**Name of Inventor :**
1)NAKAJIMA Katsumi
2)MEGA Tetsuya
3)MIZUNO Reiko
4)MORIYASU Noriaki

(57) Abstract :
Provided are high-strength hot-rolled steel sheet having excellent workability in which a hole expansion ratio (λ) of 125% or more can be reliably obtained and the TS is 490 MPa or more and less than 590 MPa, and a method for producing said high-strength hot-rolled steel sheet. A high strength hot rolled steel sheet having excellent workability and characterized by having: a composition containing, in mass %, 0.04 to 0.1% of C, 0.3 to 1.3% of Si, 0.8 to 1.8% of Mn, 0.3% or less of P, 0.005% or less of S, 0.005% or less of N, 0.005 to 0.1% of Al, at least one selected from among 0.002% or more and less than 0.03% of Ti, 0.002% or more and less than 0.03% of V, and 0.002% or more and less than 0.02% of Nb, and the remainder being Fe and unavoidable impurities; and a microstructure in which, in relation to the entire structure, the area ratio of a ferrite phase is 85% or more, the area ratio of a bainite phase is 10% or less, the area ratio of phases other than the ferrite phase and the bainite phase is 5% or less, and the area ratio of an acicular ferrite phase in relation to the entire ferrite phase is 30% or more and less than 80%.

No. of Pages : 26 No. of Claims : 5

(12) PATENT APPLICATION PUBLICATION
(19) INDIA
(22) Date of filing of Application :28/01/2013

(21) Application No.223/KOLNP/2013 A
(43) Publication Date : 05/07/2013

(54) Title of the invention : ASYMMETRIC NETWORK ADDRESS ENCAPSULATION

(51) International classification :H04L12/46,H04L12/56,H04L29/12
(31) Priority Document No :61/359,736
(32) Priority Date :29/06/2010
(33) Name of priority country :U.S.A.
(86) International Application No :PCT/US2011/042467
Filing Date :29/06/2011
(87) International Publication No :WO 2012/006198
(61) Patent of Addition to Application Number :NA
Filing Date :NA
(62) Divisional to Application Number :NA
Filing Date :NA

(71)**Name of Applicant :**
1)HUAWEI TECHNOLOGIES CO., LTD.
Address of Applicant :Huawei Administration Building, Bantian, Longgang District, Shenzhen, Guangdong 518129, P.R. China
(72)**Name of Inventor :**
1)DUNBAR, Linda
2)YIN, Guoli
3)XIONG, Yijun

(57) Abstract :
A network component comprising a receiver configured to receive an outgoing frame from a local host a logic circuit configured to map a destination address (DA) for a target host in the outgoing frame to a DA for a target location of the target host and encapsulate the outgoing frame using the DA for the target location and a transmitter configured to receive a pre encapsulated outgoing frame from a local switch and send the pre encapsulated outgoing frame to a gateway at a target location wherein the transmitter does not encapsulate frames received from local switches and decapsulates an incoming frame from a remote gateway destined towards local hosts.

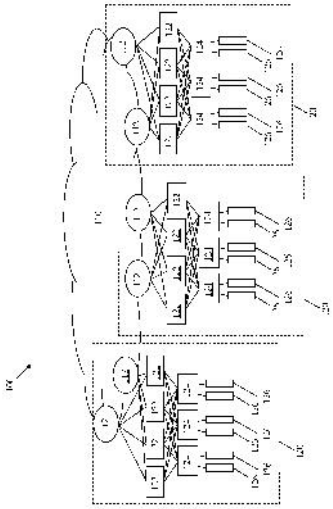

No. of Pages : 126 No. of Claims : 27

(12) PATENT APPLICATION PUBLICATION
(19) INDIA
(22) Date of filing of Application :04/02/2013
(21) Application No.294/KOLNP/2013 A
(43) Publication Date : 05/07/2013

(54) Title of the invention : DC CONNECTION DEVICE

(51) International classification :H01R13/703,H01M8/04
(31) Priority Document No :2010-207251
(32) Priority Date :15/09/2010
(33) Name of priority country :Japan
(86) International Application No :PCT/IB2011/001983
Filing Date :30/08/2011
(87) International Publication No :WO 2012/035387
(61) Patent of Addition to Application Number :NA
Filing Date :NA
(62) Divisional to Application Number :NA
Filing Date :NA

(71)**Name of Applicant :**
1)PANASONIC CORPORATION
Address of Applicant :1006, Oaza Kadoma, Kadoma-shi, Osaka 571-8501, Japan
(72)**Name of Inventor :**
1)KAGAWA Takuya
2)TAMURA Hideki

(57) Abstract :
Provided is a DC connection device comprising a first connector connected to a DC power supply (2) side or a load (3) side, and a second connector connected to the first connector. The DC connection device is provided with a semiconductor switch (13) which is switched ON when at least one of the terminals (11 , 12) of the first connector or the second connector (10 or 20) are found to be in contact with other terminals (21, 22), and which is switched OFF before the one terminal (11, 12) completely separates from the other terminal (21, 22).

No. of Pages : 58 No. of Claims : 20

(12) PATENT APPLICATION PUBLICATION
(21) Application No.396/KOLNP/2013 A
(19) INDIA
(22) Date of filing of Application :15/02/2013
(43) Publication Date : 05/07/2013

(54) Title of the invention : SURGICAL GUIDE PREPARATION TOOL AND METHOD FOR PREPARING SURGICAL GUIDE

(51) International classification :A61C8/00
(31) Priority Document No :NA
(32) Priority Date :NA
(33) Name of priority country :NA
(86) International Application No :PCT/JP2010/066284
Filing Date :21/09/2010
(87) International Publication No :WO 2012/039017
(61) Patent of Addition to Application Number :NA
Filing Date :NA
(62) Divisional to Application Number :NA
Filing Date :NA

(71)**Name of Applicant :**
1)IMPLANTDENT CO., LTD.
Address of Applicant :40-2,KAMEARI 5-CHOME,KATSUSHIKA-KU,TOKYO 1250061 Japan
(72)**Name of Inventor :**
1)AKUTSU , ISAO

(57) Abstract :
A low-cost surgical guide making tool capable of accurately and easily forming an implant insertion hole at a predetermined position is provided. The surgical guide making tool is provided with a gauge body having a pair of display members facing each other and a supporting member for connecting the display members, the gauge body being attached to a surgical guide body. Grid-like lines which can be recognized by a CT image and which are arranged vertically and horizontally at approximately regular intervals are provided on the surface of each of the display members. Predetermined marks are selected from the intersection points between the grid-like lines, and a guide ring is attached to the surgical guide body in such a manner that the direction connecting between the selected marks serves as the central axis direction of the guide ring. The central axis direction of the guide ring serves as an implant insertion direction.

No. of Pages : 28 No. of Claims : 11

(12) PATENT APPLICATION PUBLICATION
(19) INDIA
(22) Date of filing of Application :07/02/2013
(21) Application No.331/KOLNP/2013 A
(43) Publication Date : 05/07/2013

(54) Title of the invention : ROTATION-PREVENTION MEANS FOR BOREHOLE PUMPS

(51) International classification :E21B
(31) Priority Document No :10 2010 034 325.0
(32) Priority Date :14/08/2010
(33) Name of priority country :Germany
(86) International Application No :PCT/DE2011/001425
Filing Date :13/07/2011
(87) International Publication No :WO 2012/022287
(61) Patent of Addition to Application Number :NA
Filing Date :NA
(62) Divisional to Application Number :NA
Filing Date :NA

(71)**Name of Applicant :**
1)NETZSCH MOHNOPUMPEN GMBH
Address of Applicant :Gebr¼der-Netzsch-Strasse 19, 95100 Selb, Germany
(72)**Name of Inventor :**
1)HEIZINGER, Klaus

(57) Abstract :
The invention relates to a rotation-prevention means for ascending pipes in a borehole. The rotation-prevention means brings at least two tooth reinforced claws into operative connection with an inner wall of a borehole by way of at least two protuberances. The at least two protuberances are arranged on a preferably hollow basic body. The ascending pipe and/or an eccentric screw pump can be centred by the rotation-prevention means. The claws are connected to one another and/or braced in each case by at least one helical compression spring.

No. of Pages : 19 No. of Claims : 13

(12) PATENT APPLICATION PUBLICATION
(19) INDIA
(22) Date of filing of Application :31/10/2012
(21) Application No.3313/KOLNP/2012 A
(43) Publication Date : 05/07/2013

(54) Title of the invention : CHEWING GUM WITH PRETREATED POLYOLS

(51) International classification :A23L1/00,A23L1/053,A23L1/059
(31) Priority Document No :61/329,855
(32) Priority Date :30/04/2010
(33) Name of priority country :U.S.A.
(86) International Application No :PCT/US2011/034531
Filing Date :29/04/2011
(87) International Publication No :WO 2011/137329
(61) Patent of Addition to Application Number :NA
Filing Date :NA
(62) Divisional to Application Number :NA
Filing Date :NA

(71)**Name of Applicant :**
1)KRAFT FOODS GLOBAL BRANDS LLC
Address of Applicant :Three Lakes Drive, Northfield, Illinois 60093 U.S.A.
2)NIHON KRAFT FOODS LIMITED
(72)**Name of Inventor :**
1)ADIVI, Krishna Mohan
2)BEAM, Matthew
3)ENOMOTO, Koichi
4)KABSE, Kishor
5)KAJIYA, Chizuru
6)KOSEKI, Takaya
7)MILADINOV, Vesselin

(57) Abstract :
Disclosed herein are polyol particles treated to modify the properties of the polyol. Polyol particles are coated with a crunch material coating composition to provide a particulate crunch material. Alternatively hygroscopic polyol particles are coated with an inorganic material to provide a polyol having a reduced capacity for moisture absorption. Also disclosed herein is the incorporation of such pretreated polyol particle compositions in chewing gum.

No. of Pages : 38 No. of Claims : 43

(12) PATENT APPLICATION PUBLICATION
(19) INDIA
(22) Date of filing of Application :13/02/2013
(21) Application No.379/KOLNP/2013 A
(43) Publication Date : 05/07/2013

(54) Title of the invention : MELTABLE SMOKELESS TOBACCO COMPOSITION

(51) International classification :A24B13/00,A24B15/30,A23G4/06
(31) Priority Document No :12/854,342
(32) Priority Date :11/08/2010
(33) Name of priority country :U.S.A.
(86) International Application No :PCT/US2011/047062
Filing Date :09/08/2011
(87) International Publication No :WO 2012/021504
(61) Patent of Addition to Application Number :NA
Filing Date :NA
(62) Divisional to Application Number :NA
Filing Date :NA

(71)**Name of Applicant :**
1)R. J. REYNOLDS TOBACCO COMPANY
Address of Applicant :401 NORTH MAIN STREET, WINSTON-SALEM, NORTH CAROLINA 27101-3804 U.S.A.
(72)**Name of Inventor :**
1)CANTRELL,DANIEL ,VERDIN
2)CHEN , GONG

(57) Abstract :
A meltable smokeless tobacco composition configured for insertion into the mouth of a user is provided. The smokeless tobacco composition includes a particulate tobacco material and a lipid having a melting point of about 36C to about 45C. An associated process is also provided. The process includes melting a lipid having a melting point of about 36C to about 45C to form a molten lipid composition, mixing a particulate tobacco material with the molten lipid composition to form a molten smokeless tobacco composition slurry, and cooling the molten smokeless tobacco composition slurry to form a solidified smokeless tobacco composition.

No. of Pages : 40 No. of Claims : 23

(12) PATENT APPLICATION PUBLICATION
(19) INDIA
(22) Date of filing of Application :15/02/2013

(21) Application No.398/KOLNP/2013 A
(43) Publication Date : 05/07/2013

(54) Title of the invention : HOUSEHOLD SYSTEM WITH MULTIPLE PELTIER SYSTEMS

(51) International classification :F25B21/02
(31) Priority Document No :61/444,518
(32) Priority Date :18/02/2011
(33) Name of priority country :U.S.A.
(86) International Application No :PCT/SE2012/050140
Filing Date :13/02/2012
(87) International Publication No :WO 2012/112107
(61) Patent of Addition to Application Number :NA
Filing Date :NA
(62) Divisional to Application Number :NA
Filing Date :NA

(71)**Name of Applicant :**
1)ZOLIEX AB
Address of Applicant :BOX 1118, S-181 22 LIDINGÖ Sweden
(72)**Name of Inventor :**
1)ARAFAT, YASIR
2)AMIN, MOHAMMAD
3)SOORIAN, NARENDRAN
4)SÖDERSTRÖM, GUSTAV
5)MANGOLD, STEPHAN

(57) Abstract :
A household system (1), which includes a first cooling unit (10) that is configured to be connectable to a heat/energy reservoir (30) via a first peltier system (11), and a heating unit (20) that is configured to be connectable to the heat/energy reservoir (30) via a second peltier system (21), where the first peltier system (11) is configured for transferring heat/energy between the cooling unit (10) and the energy reservoir (30), and the second peltier system (21) is configured for transferring energy between the heat reservoir (30) and the heating unit (20).

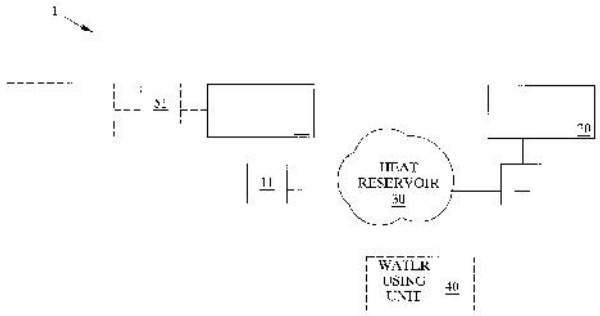

No. of Pages : 25 No. of Claims : 17

(12) PATENT APPLICATION PUBLICATION
(21) Application No.3981/KOLNP/2012 A
(19) INDIA
(22) Date of filing of Application :14/12/2012
(43) Publication Date : 05/07/2013

(54) Title of the invention : USER INTERFACE WITH INBOX MODE AND DOCUMENT MODE FOR SINGLE INPUT WORK FLOW ROUTING

(51) International classification :G06T11/60,G06F3/048,G06F17/21
(31) Priority Document No :12/826,556
(32) Priority Date :29/06/2010
(33) Name of priority country :U.S.A.
(86) International Application No :PCT/JP2011/065128
Filing Date :24/06/2011
(87) International Publication No :WO 2012/002518
(61) Patent of Addition to Application Number :NA
Filing Date :NA
(62) Divisional to Application Number :NA
Filing Date :NA

(71)**Name of Applicant :**
1)RICOH COMPANY, LTD.
Address of Applicant :3-6, Nakamagome 1-chome, Ohta-ku, Tokyo, 1438555 Japan
(72)**Name of Inventor :**
1)PIERSOL, Kurt W.
2)AMEMIYA, Kanae
3)RHODES, Bradley J.

(57) Abstract :
A user interface for a portable computing device provides two modes of operation. In a first mode, an inbox of all documents accessible by the portable computing device are presented. Each of the items in the inbox is selectable, and if selected, the user interface transitions to a second document presentation mode. In the document presentation mode, the user may annotate the document and upon providing a single input (selecting a submit button), the system automatically forwards the document (including the annotations) to the next state in the workflow. If the user transitions back to the inbox mode from the document presentation mode, no action is taken on the document but the strokes are stored with the document on the portable computing device.

No. of Pages : 82 No. of Claims : 20

(12) PATENT APPLICATION PUBLICATION
(19) INDIA
(22) Date of filing of Application :29/01/2013
(21) Application No.243/KOLNP/2013 A
(43) Publication Date : 05/07/2013

(54) Title of the invention : PROCESS FOR THE PREPARATION OF MULTIFUNCTIONAL POLYCARBODIIMIDES WHICH ARE USED AS CROSSLINKING AGENTS

(51) International classification :C08G73/00,C08L79/00,C09D179/00
(31) Priority Document No :2005163
(32) Priority Date :28/07/2010
(33) Name of priority country :Netherlands
(86) International Application No :PCT/NL2011/050397
Filing Date :06/06/2011
(87) International Publication No :WO 2012/015295
(61) Patent of Addition to Application Number :NA
Filing Date :NA
(62) Divisional to Application Number :NA
Filing Date :NA

(71)**Name of Applicant :**
1)STAHL INTERNATIONAL B.V.
Address of Applicant :Sluisweg 10, 5145 PE Waalwijk, The Netherlands
(72)**Name of Inventor :**
1)DERKSEN, Andries, Johannes
2)VAN DER, BRUGGEN, Robrecht Leonardus Johannes

(57) Abstract :
A process for the preparation of multifunctional polycarbodiimides, which are used as crosslinking agents, in which the polycarbodiimide is prepared by reacting mono- and polyisocyanates in the presence of a mono- or polyisocyanate that contains one or multiple additional reactive functional groups and in the presence of a carbodiimide catalyst, and thereafter terminating or chain extending the polycarbodiimide chain. Between 0 and 10% of an organic solvent and/or between 0 and 30% of a plasticizer and/or between 0 and 30% of a surface active component is added to the product during, before or after the polycarbodiimide forming reaction and/or the capping reaction and/or the chain extending reaction. Further, the invention relates to a coating mixture in which the polycarbodiimide is used as crosslinking agent and to the cured material obtained with the coating mixture.

No. of Pages : 19 No. of Claims : 14

(12) PATENT APPLICATION PUBLICATION
(19) INDIA
(22) Date of filing of Application :01/02/2013
(21) Application No.280/KOLNP/2013 A
(43) Publication Date : 05/07/2013

(54) Title of the invention : PIEZO-ELECTRIC BASED MICRO-ELECTRO-MECHANICAL LENS ACTUATION SYSTEM

(51) International classification :B81B3/00,B81B5/00,G02B26/08
(31) Priority Document No :2010902976
(32) Priority Date :05/07/2010
(33) Name of priority country :Australia
(86) International Application No :PCT/AU2011/000837
Filing Date :04/07/2011
(87) International Publication No :WO 2012/003529
(61) Patent of Addition to Application Number :NA
Filing Date :NA
(62) Divisional to Application Number :NA
Filing Date :NA

(71)**Name of Applicant :**
1)MICHAEL, Aron
Address of Applicant :16/16-18 Sellwood Street, Brighton-lesands, NSW, 2216, Australia
2)KWOK, Chee Yee
(72)**Name of Inventor :**
1)MICHAEL Aron
2)KWOK, Chee Yee

(57) Abstract :
Disclosed is a piezo-electrically actuated micro- mechanical deformable member comprising a corrugated longitudinal beam (521) formed in a substrate, and having a first anchored end (502) and a second end (509), as well as a plurality of piezoelectric film (PZET) actuating segments (522, 523, 524) formed in or on at least some grooves and ridges of the corrugated beam, the beam (521) being configured to assume one of a number of different geometric configurations depending upon which of a corresponding set of electric actuation signals (105) are applied to the PZET elements, the electric actuation signals establishing corresponding electric fields in the associated PZET segments to thereby deform the member.

No. of Pages : 39 No. of Claims : 19

(12) PATENT APPLICATION PUBLICATION
(19) INDIA
(22) Date of filing of Application :12/01/2011
(21) Application No.34/KOL/2011 A
(43) Publication Date : 05/07/2013

(54) Title of the invention : A NOVEL DEVICE FOR THE PARTICLE SEPARATION OF FLUX AND SLAG MATERIAL IN THE OUTLET OF SUBMERGED ARC WELDING MACHINE

(51) International classification :C21C5/28
(31) Priority Document No :NA
(32) Priority Date :NA
(33) Name of priority country :NA
(86) International Application No :NA
Filing Date :NA
(87) International Publication No : NA
(61) Patent of Addition to Application Number :NA
Filing Date :NA
(62) Divisional to Application Number :NA
Filing Date :NA

(71)**Name of Applicant :**
1)BHARAT HEAVY ELECTRICALS LIMITED
Address of Applicant :AT REGIONAL OPERATIONS DIVISION (ROD), PLOT NO 9/1, DJBLOCK 3RD FLOOR, KARUNAMOYEE, SALT LAKE CITY, KOLKATA-700091, HAVING ITS REGISTERED OFFICE AT BHEL HOUSE, SIRI FORT, NEW DELHI-110049, INDIA
(72)**Name of Inventor :**
1)VENKATARAMAN DEVARAJAN
2)AMIRTHEM ANTHONY ADIMAI
3)CHITHRAI JAYARAMAN
4)MUTHUSAMY MURUGANANTHAM

(57) Abstract :
During sub-merged arc welding, the flux and slag material get mixed-up, and form ash. The ash is to sieved to segregate the non-transformed flux material, which is sieved again. To eliminate several manual sieving steps, a device is fabricated for automatic separation of flux and slag material.

No. of Pages : 9 No. of Claims : 2

(12) PATENT APPLICATION PUBLICATION
(21) Application No.360/KOLNP/2013 A
(19) INDIA
(22) Date of filing of Application :11/02/2013
(43) Publication Date : 05/07/2013

(54) Title of the invention : PROCESSED CHEESE PRODUCING APPARATUS

(51) International classification :A01J25/15,A23C19/08
(31) Priority Document No :2010-189745
(32) Priority Date :26/08/2010
(33) Name of priority country :Japan
(86) International Application No :PCT/JP2011/068455
Filing Date :12/08/2011
(87) International Publication No :WO 2012/026351
(61) Patent of Addition to Application Number :NA
Filing Date :NA
(62) Divisional to Application Number :NA
Filing Date :NA

(71)**Name of Applicant :**
1)MEIJI CO., LTD.
Address of Applicant :2-10, SHINSUNA 1-CHOME, KOTO-KU, TOKYO 1368908, Japan
(72)**Name of Inventor :**
1)TETSUHISA GOTOU
2)NORIAKI MATSUNAGA
3)KAZUNOBU SUGIYAMA

(57) Abstract :
This cheese forming device (3) forms sheet cheese (52) while cooling molten cheese (51) supplied from a molten cheese supply device (2). The cheese forming device (3) is provided with cooling belts (11, 12) and a mold release agent misting device (41). By means of being disposed parallel to each other, the cooling belts (11, 12) form a space (S1) into which the molten cheese flows. The molten cheese (51) that flows into the space (S1) is hardened by being cooled, and is formed into sheet cheese (52). The mold release agent misting device (41) mists a mold release agent at a surface among the outer surfaces of one cooling belt (11) that does not face another cooling belt (12). In the space (S1), a slip layer (61) containing the mold release agent is interposed between the sheet cheese (52) and one of the cooling belts (11). When the sheet cheese (52) moves to the outside of the space (S1), the sheet cheese (52) is easily peeled from the cooling belt (11).

No. of Pages : 25 No. of Claims : 4

(12) PATENT APPLICATION PUBLICATION
(19) INDIA
(22) Date of filing of Application :14/12/2012
(21) Application No.3983/KOLNP/2012 A
(43) Publication Date : 05/07/2013

(54) Title of the invention : ROTARY ADJUSTMENT FOR DUAL SWITCH ASSEMBLY

(51) International classification :G01D11/24
(31) Priority Document No :12/831,606
(32) Priority Date :07/07/2010
(33) Name of priority country :U.S.A.
(86) International Application No :PCT/US2011/042939
Filing Date :05/07/2011
(87) International Publication No :WO 2012/006274
(61) Patent of Addition to Application Number :NA
Filing Date :NA
(62) Divisional to Application Number :NA
Filing Date :NA

(71)**Name of Applicant :**
1)ASHCROFT, INC.
Address of Applicant :250 East Main Street, Stratford, CT 06614-5145 U.S.A.
(72)**Name of Inventor :**
1)BESSETTE, Tyler, Jon
2)DLUGOS, David

(57) Abstract :
The present disclosure provides for systems and methods for fabricating sensing and/or control device assemblies, e.g., a dual pressure switch sensing and/or control device, a dual temperature switch sensing and/or control device or the like. More particularly, the present disclosure provides for systems and methods for fabricating sensing and/or control device assemblies (e.g., dual switch sensing and/or control device assemblies) with adjustment features and/or functionalities for switch calibration and/or adjustment, in one embodiment, the present disclosure provides for systems and methods for fabricating sensing and/or control device assemblies (e.g., dual switch sensing and/or control device assemblies) with rotary adjustment features/functionalities wherein the switches of the sensing device may be calibrated or adjusted via the rotary adjustment features/functionalities.

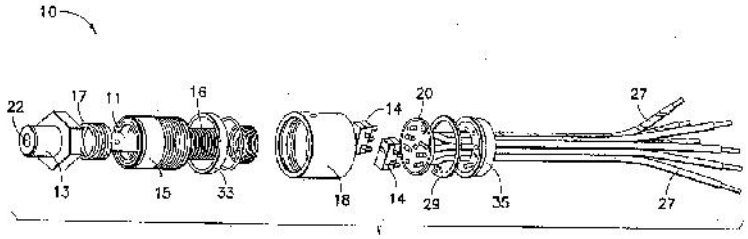

No. of Pages : 25 No. of Claims : 30

(12) PATENT APPLICATION PUBLICATION
(19) INDIA
(22) Date of filing of Application :14/12/2012
(21) Application No.3984/KOLNP/2012 A
(43) Publication Date : 05/07/2013

(54) Title of the invention : METHOD OF DETERMINING A POSITION IN A WIRELESS COMMUNICATION SYSTEM AND APPARATUS THEREOF

(51) International classification :H04W64/00,G01S5/04,H04J11/00
(31) Priority Document No :61/364,818
(32) Priority Date :16/07/2010
(33) Name of priority country :U.S.A.
(86) International Application No :PCT/KR2011/005096
Filing Date :12/07/2011
(87) International Publication No :WO 2012/008727
(61) Patent of Addition to Application Number :NA
Filing Date :NA
(62) Divisional to Application Number :NA
Filing Date :NA

(71)**Name of Applicant :**
1)LG ELECTRONICS INC.
Address of Applicant :20 Yeouido-Dong, Yeongdeungpo-Gu Seoul 150-721 REPUBLIC OF KOREA
(72)**Name of Inventor :**
1)WOO, Kyungsoo
2)YOON, Sukhyon
3)BAE, Hyowon
4)HAN, Seunghee
5)JUNG, Hyungsung
6)MAENG, Joonseok

(57) Abstract :
A method of determining a position in a wireless communication system and apparatus thereof are disclosed. The present invention includes receiving system information including information on a reference cell and at least one neighbor cell from a location server receiving positioning reference signals (PRSs) from the reference cell and the at least one neighbor cell using the system information measuring reference signal time difference (RSTD) of each of the at least one neighbor cell for the reference cell and transmitting the at least one measured RSTD to the location server. And the RSTD is a relative timing difference between two cells. Moreover the system information includes at least one cell for obtaining a system frame number (SFN) by the UE as the reference cell or the at least one neighbor cell.

No. of Pages : 41 No. of Claims : 24

(12) PATENT APPLICATION PUBLICATION
(19) INDIA
(22) Date of filing of Application :14/12/2012
(21) Application No.3986/KOLNP/2012 A
(43) Publication Date : 05/07/2013

(54) Title of the invention : FILTER INSERT

(51) International classification :B01D46/52,B01D46/00,B01D46/10
(31) Priority Document No :102010023973.9
(32) Priority Date :16/06/2010
(33) Name of priority country :Germany
(86) International Application No :PCT/EP2011/059840
Filing Date :14/06/2011
(87) International Publication No :WO 2011/157706
(61) Patent of Addition to Application Number :NA
Filing Date :NA
(62) Divisional to Application Number :NA
Filing Date :NA

(71)**Name of Applicant :**
1)MAHLE INTERNATIONAL GMBH
Address of Applicant :Pragstrasse 26-46, 70376 Stuttgart, Germany
(72)**Name of Inventor :**
1)DISSON, Ralf
2)GOLDMANN, Dieter
3)HANDEL, Rainer
4)ROTHER, Thilo
5)SCHWÖRER, Falko
6)TRAUB, Matthias
7)VON MERKATZ, Hendrik

(57) Abstract :
An opening passes through a filter wall arranged between two mutually spaced bottom disks. The filter insert can be connected to a crude chamber inlet or a clean chamber outlet of the filter housing by means of the opening. Said opening is disposed in a flange plate that is connected to the bottom disks in a form fitting manner.

No. of Pages : 17 No. of Claims : 10

(12) PATENT APPLICATION PUBLICATION
(19) INDIA
(22) Date of filing of Application :14/12/2012
(21) Application No.3987/KOLNP/2012 A
(43) Publication Date : 05/07/2013

(54) Title of the invention : FILTER ARRANGEMENT, IN PARTICULAR AIR FILTER ARRANGEMENT

(51) International classification :B01D46/24,B01D46/48,B01D46/52
(31) Priority Document No :10 2010 023 974.7
(32) Priority Date :16/06/2010
(33) Name of priority country :Germany
(86) International Application No :PCT/EP2011/059780
Filing Date :14/06/2011
(87) International Publication No :WO 2011/157680
(61) Patent of Addition to Application Number :NA
Filing Date :NA
(62) Divisional to Application Number :NA
Filing Date :NA

(71)**Name of Applicant :**
1)MAHLE INTERNATIONAL GMBH
Address of Applicant :Pragstrasse 26-46, 70376 Stuttgart, Germany
(72)**Name of Inventor :**
1)GENSLER, Harry
2)ROTHER, Thilo
3)SUTSCHITSCH, Hannes
4)TRAUB, Matthias
5)VON MERKATZ, Hendrik
6)WAIBEL, Hans

(57) Abstract :
Within a housing with an untreated room entrance and a clean room exit, a filter insert is arranged at the clean room exit in such a manner that the interior of the filter insert forms a clean room and the space remaining in the housing outside the filter insert forms an untreated room. A housing interior lining is arranged on the filter insert in the vicinity of the clean room exit in order to prevent dirt from penetrating the clean room exit during changing of the filter insert.

No. of Pages : 12 No. of Claims : 9

(12) PATENT APPLICATION PUBLICATION
(19) INDIA
(22) Date of filing of Application :14/12/2012
(21) Application No.3988/KOLNP/2012 A
(43) Publication Date : 05/07/2013

(54) Title of the invention : FILTER ARRANGEMENT, IN PARTICULAR AIR FILTER ARRANGEMENT

(51) International classification :B01D46/52,B01D46/00,B01D46/10
(31) Priority Document No :10 2010 023 972.0
(32) Priority Date :16/06/2010
(33) Name of priority country :Germany
(86) International Application No :PCT/EP2011/059801
Filing Date :14/06/2011
(87) International Publication No :WO 2011/157687
(61) Patent of Addition to Application Number :NA
Filing Date :NA
(62) Divisional to Application Number :NA
Filing Date :NA

(71)**Name of Applicant :**
1)MAHLE INTERNATIONAL GMBH
Address of Applicant :Pragstrasse 26-46, 70376 Stuttgart, Germany
(72)**Name of Inventor :**
1)ROTHER, Thilo
2)TRAUB, Matthias

(57) Abstract :
Inside a box-like housing there is arranged a filter insert which has two bottom discs (7,7) directly adjacent to the side walls of the housing. The housing can be divided with respect to a parting plane which is substantially orthogonal to the side walls, wherein profiled strips (100), which are parallel to the parting plane and arranged on the bottom discs (7,7) of the filter insert bear in a form and/or force fitting manner against the inner side of the side walls of the housing and/or can be fixed on or between those regions of the side wall parts of the housing that are on the parting plane side.

No. of Pages : 28 No. of Claims : 14

(12) PATENT APPLICATION PUBLICATION
(19) INDIA
(22) Date of filing of Application :14/12/2012
(21) Application No.3989/KOLNP/2012 A
(43) Publication Date : 05/07/2013

(54) Title of the invention : METHOD FOR PRODUCTION OF HEAT-RESISTANT CONTAINER

(51) International classification :B29C49/18,B29C49/42,B29C49/48
(31) Priority Document No :2010-146876
(32) Priority Date :28/06/2010
(33) Name of priority country :Japan
(86) International Application No :PCT/JP2011/063839
Filing Date :16/06/2011
(87) International Publication No :WO 2012/002164
(61) Patent of Addition to Application Number :NA
Filing Date :NA
(62) Divisional to Application Number :NA
Filing Date :NA

(71)**Name of Applicant :**
1)NISSEI ASB MACHINE CO., LTD.
Address of Applicant :4586-3, Koo, Komoro-shi, Nagano 384-8585 Japan
(72)**Name of Inventor :**
1)TSUCHIYA Yoichi

(57) Abstract :
Disclosed is a production method for a heat- resistant container whereby a reduction in internal pressure displaces a false bottom inward. The production method is characterized by: the formation of a false bottom (11) that is thinner than a surrounding wall section (12a) by a first blow-molding that uses a heat-treating blow-molding mold and, when a second blow- molding using a final blow-molding mold is performed, the pushing up of the false bottom (11) by a secondary bottom mold and the increase in the thickness of the surrounding wall section (12a) (contact section (12)) in relation to the false bottom.

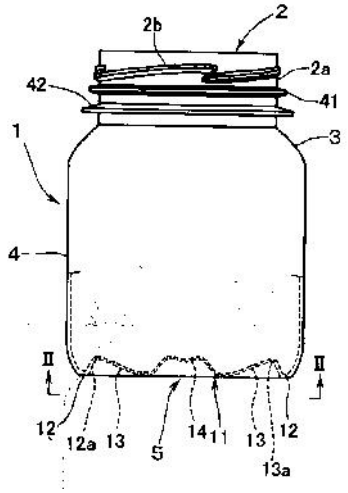

No. of Pages : 34 No. of Claims : 5

(12) PATENT APPLICATION PUBLICATION
(19) INDIA
(22) Date of filing of Application :01/02/2013
(21) Application No.291/KOLNP/2013 A
(43) Publication Date : 05/07/2013

(54) Title of the invention : BASE FABRIC FOR AIRBAG

(51) International classification :D03D15/00,B60R21/235,D03D1/02
(31) Priority Document No :2010-186323
(32) Priority Date :23/08/2010
(33) Name of priority country :Japan
(86) International Application No :PCT/JP2011/068946
Filing Date :23/08/2011
(87) International Publication No :WO 2012/026455
(61) Patent of Addition to Application Number :NA
Filing Date :NA
(62) Divisional to Application Number :NA
Filing Date :NA

(71)**Name of Applicant :**
1)Asahi Kasei Fibers Corporation
Address of Applicant :3-23, Nakanoshima 3-chome, Kita-ku, Osaka-shi, Osaka 5308205, Japan
(72)**Name of Inventor :**
1)TANAKA, Takeshi
2)ISE, Fumiaki
3)OKUNO, Tokio
4)ENOKI, Masato

(57) Abstract :
The purpose of the present invention is to provide a base fabric suitable for making a general purpose airbag that has a suppressed air permeability, a higher airtightness, a high expansion speed, a high pressure resistance of a boundary section between an expanding portion and a non expanding portion, and a high impact absorbing performance for an occupant. This base fabric for an airbag is characterized by being made of a woven fabric composed of multifilament synthetic fibers having a total fiber fineness of 200 to 550 dtex and a single fiber fineness of 2.0 to 7.0 dtex, and characterized in that the degrees of extensibility under the loads of 50 N/cm and 300 N/cm are respectively 5 to 15% and 15 to 30% on average for the longitudinal and lateral directions, and the pullout resistance of the constituting yarns is 50 to 200 N/cm/cm on average for the longitudinal and lateral directions.

No. of Pages : 45 No. of Claims : 14

(12) PATENT APPLICATION PUBLICATION
(21) Application No.330/KOLNP/2013 A
(19) INDIA
(22) Date of filing of Application :07/02/2013
(43) Publication Date : 05/07/2013

(54) Title of the invention : COMPRESSION BONE SCREW

(51) International classification :A61B17/06
(31) Priority Document No :2010903020
(32) Priority Date :07/07/2010
(33) Name of priority country :Australia
(86) International Application No :PCT/AU2011/000865
Filing Date :07/07/2011
(87) International Publication No :WO 2012/003548
(61) Patent of Addition to Application Number :NA
Filing Date :NA
(62) Divisional to Application Number :NA
Filing Date :NA

(71)**Name of Applicant :**
1)YALIZIS, Matthew, Adam
Address of Applicant :22 Lloyd Street, Sans Souci, NSW 2219 Australia
(72)**Name of Inventor :**
1)YALIZIS, Matthew, Adam

(57) Abstract :
A compression bone screw (100) comprises a shank (110), a first element (120) and a second element (130). The shank (1 10) has longitudinally opposing first and second shank portions (111,112). The first shank portion (111) is externally threaded with a first shank thread (113). The first element (120) is threadingly mounted on the first shank portion (111) by way of a first element internal thread (122) threadingly engaging the first shank thread (113). The first element (120) is externally threaded with a first element external thread (123). The second element (130) is mounted on, or integrally formed with, the second shank portion (1 12). The second element (130) is externally threaded with a second element external thread (133). The second element external thread (133) and the first element external thread (123) are like-handed. The first shank portion (111) and the first element (120) are configured to operate in a first mode of operation in which the shank (110) and the first element (120) are rotationally driven in unison and a second mode of operation in which the shank (110) is rotationally driven independent of the first element (120), such that the first element (120) moves along the first shank portion (111) towards the second element (130).

No. of Pages : 52 No. of Claims : 31

(12) PATENT APPLICATION PUBLICATION
(21) Application No.351/KOLNP/2013 A
(19) INDIA
(22) Date of filing of Application :11/02/2013
(43) Publication Date : 05/07/2013

(54) Title of the invention : METHOD OF TREATMENT OF HIV OR AIDS

(51) International classification :A61K38/08,A61P31/18
(31) Priority Document No :2010903143
(32) Priority Date :14/07/2010
(33) Name of priority country :Australia
(86) International Application No :PCT/AU2011/000878
Filing Date :14/07/2011
(87) International Publication No :WO 2012/006667
(61) Patent of Addition to Application Number :NA
Filing Date :NA
(62) Divisional to Application Number :NA
Filing Date :NA

(71)**Name of Applicant :**
1)ADISTEM LTD
Address of Applicant :5/ F CNT TOWER, 338 HENNESSEY ROAD, HONG KONG China
(72)**Name of Inventor :**
1)PASPALIARIS, VASILIS

(57) Abstract :
The invention relates to a method of treating HIV or AIDS comprising administering a composition comprising a polypeptide comprising LKKTETQ (SEQ ID NO: 1) or a variant thereof, or administering a composition comprising a peptidomimetic of a polypeptide comprising amino acid sequence LKKTETQ (SEQ ID NO: 1) or a variant thereof.

No. of Pages : 27 No. of Claims : 13

(12) PATENT APPLICATION PUBLICATION
(19) INDIA
(22) Date of filing of Application :24/12/2012
(21) Application No.4100/KOLNP/2012 A
(43) Publication Date : 05/07/2013

(54) Title of the invention : DEVICE FOR PLACEMENT IN A HOLLOW ORGAN, IN PARTICULAR FOR HOLDING OPEN SAID HOLLOW ORGAN AND METHOD FOR PRODUCING SUCH DEVICE

(51) International classification :A61F2/06,A61F2/90
(31) Priority Document No :10164721.2
(32) Priority Date :02/06/2010
(33) Name of priority country :EPO
(86) International Application No :PCT/EP2011/058931
Filing Date :31/05/2011
(87) International Publication No :WO 2011/151318
(61) Patent of Addition to Application Number :NA
Filing Date :NA
(62) Divisional to Application Number :NA
Filing Date :NA

(71)**Name of Applicant :**
1)NONWOTECC MEDICAL GMBH
Address of Applicant :NATTERMANNALLEE 1, 50829 COLOGNE, Germany
(72)**Name of Inventor :**
1)WILLEMS, FRANK
2)CLABEN, CRISTOPH
3)HENSELER, ANDREAS
4)WITT, WOLFGANG

(57) Abstract :
The device for placement in a hoilow organ, in particular for holding open the hollow organ, comprises a placement body (12) having an inner side and an outer side (14). The device further comprises at least one layer (16) of biostabie random-fiber fleece material arranged on said placement body (12) and being at least partially in abutment thereon.

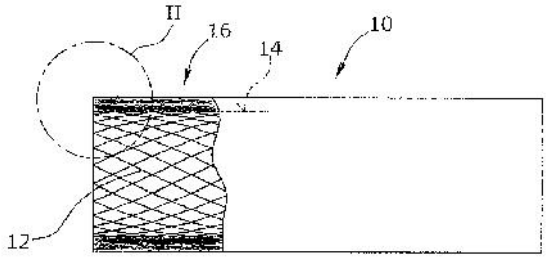

No. of Pages : 17 No. of Claims : 12

(12) PATENT APPLICATION PUBLICATION
(19) INDIA
(22) Date of filing of Application :24/12/2012
(21) Application No.4101/KOLNP/2012 A
(43) Publication Date : 05/07/2013

(54) Title of the invention : HOUSEHOLD APPLIANCE COMPRISING AN OZONE GENERATOR

(51) International classification :D06F25/00,D06F35/00,D06F39/00
(31) Priority Document No :10 2010 038 619.7
(32) Priority Date :29/07/2010
(33) Name of priority country :Germany
(86) International Application No :PCT/EP2011/062338
Filing Date :19/07/2011
(87) International Publication No :WO 2012/013541
(61) Patent of Addition to Application Number :NA
Filing Date :NA
(62) Divisional to Application Number :NA
Filing Date :NA

(71)**Name of Applicant :**
1)BSH BOSCH UND SIEMENS HAUSGERÄTE GMBH
Address of Applicant :CARL-WERY-STR. 34, 81739 MÜNCHEN, Germany
(72)**Name of Inventor :**
1)EGLMEIER HANS
2)HANAU ANDREAS
3)SCHAUB HARTMUT

(57) Abstract :
The invention relates to a household appliance (1) designed especially as a water-bearing household appliance (1), such as a laundry treatment appliance (1) for washing and/or drying laundry, comprising a treatment area (9) and a steam generator (2). Steam generated by the steam generator (2) can be guided into the treatment area (9). An ozone generator (4) is also provided, ozone generated by the ozone generator (4) being guided with the steam into the treatment area (9).

No. of Pages : 13 No. of Claims : 10

(12) PATENT APPLICATION PUBLICATION
(21) Application No.4102/KOLNP/2012 A
(19) INDIA
(22) Date of filing of Application :24/12/2012
(43) Publication Date : 05/07/2013

(54) Title of the invention : ADJUSTABLE TORQUE HINGE

(51) International classification :E05F1/12
(31) Priority Document No :099126071
(32) Priority Date :05/08/2010
(33) Name of priority country :Taiwan
(86) International Application No :PCT/US2010/054696
Filing Date :29/10/2010
(87) International Publication No :WO 2012/018361
(61) Patent of Addition to Application Number :NA
Filing Date :NA
(62) Divisional to Application Number :NA
Filing Date :NA

(71)**Name of Applicant :**
1)HUI -FANG, SHAW, HWEE
Address of Applicant :1395 SHENANDOAH ROAD, SAN MARINO, CANADA 91108 U.S.A.
2)WATERSON CORP.
3)CHEN, WATERSON
(72)**Name of Inventor :**
1)CHEN ,WATERSON

(57) Abstract :
An adjustable torque hinge includes a set hinge, a torque providing unit and a torque adjusting unit, the set hinge unit couples a first and second wing plate with a pivot pin, wherein the first and second wing plate forms a pin joint with a first sleeve and second sleeve; the torque providing unit includes a torque spring to provide turn back recovery, a torque adjusting unit which consists a torque adjustment member; the first sleeve includes a first cam inside, and the torque adjustment member includes a second cam which couples with the first cam to drive the torque adjustment member to perform torque adjustment to the torque spring, whereby the conversion between the first and second sleeves enables the bearing hinge to be used in both directions such that the present invention can accumulate pressure both in normal and reverse directions to adjust the torque force for open and close operations.

No. of Pages : 23 No. of Claims : 5

(12) PATENT APPLICATION PUBLICATION
(19) INDIA
(22) Date of filing of Application :24/12/2012
(21) Application No.4103/KOLNP/2012 A
(43) Publication Date : 05/07/2013

(54) Title of the invention : METHOD AND DEVICE FOR CO-ORDINATING TWO CONSECUTIVE PRODUCTION STEPS OF A PRODUCTION PROCESS

(51) International classification :G05B13/02,G05B13/04
(31) Priority Document No :10 2010 032 185.0
(32) Priority Date :23/07/2010
(33) Name of priority country :Germany
(86) International Application No :PCT/EP2011/003499
Filing Date :13/07/2011
(87) International Publication No :WO 2012/010271
(61) Patent of Addition to Application Number :NA
Filing Date :NA
(62) Divisional to Application Number :NA
Filing Date :NA

(71)**Name of Applicant :**
1)ABB AG
Address of Applicant :KALLSTADTER STR. 1, 68309 MANNHEIM Germany
(72)**Name of Inventor :**
1)SAND GUIDO
2)XU CHAOJUN
3)HARJUNKOSKI IIRO
4)SALIBA SLEMAN

(57) Abstract :
The invention relates to a method for coordinating two consecutive production steps (11,13) of a production process. The method comprises the following steps: a) creating (S1) a production flow chart of a first of the production steps (11) according to a first optimization goal on the basis of one or more first optimization parameters in order to obtain a first optimization result; b) creating (S1) a production flow chart of a second of the production steps (13) according to a second optimization goal on the basis of one or more second optimization parameters in order to obtain a second optimization result; c) evaluating (S2) the optimization results with respect to an overall optimization goal; d) modifying (S4) the first and second optimization parameters; and e) repeating (S5) the creation of the production flow charts of the first and second production steps (11,13) according to the respective optimization goal on the basis of the modified first and/or second optimization parameters.

No. of Pages : 30 No. of Claims : 11

(12) PATENT APPLICATION PUBLICATION
(19) INDIA
(22) Date of filing of Application :24/12/2012
(21) Application No.4104/KOLNP/2012 A
(43) Publication Date : 05/07/2013

(54) Title of the invention : WET BRAKE DEVICE

(51) International classification :F16D55/40,F16D65/12,F16D69/00
(31) Priority Document No :2010-224778
(32) Priority Date :04/10/2010
(33) Name of priority country :Japan
(86) International Application No :PCT/JP2011/072370
Filing Date :29/09/2011
(87) International Publication No :WO 2012/046619
(61) Patent of Addition to Application Number :NA
Filing Date :NA
(62) Divisional to Application Number :NA
Filing Date :NA

(71)**Name of Applicant :**
1)HITACHI CONSTRUCTION MACHINERY CO. LTD.,
Address of Applicant :5-1, KORAKU 2-CHOME, BUNKYO-KU, TOKYO- 1120004 Japan
(72)**Name of Inventor :**
1)YABUUCHI,YOSHITOMO
2)NIIDOME TAKASHI
3)KOMARU YUTAKA

(57) Abstract :
In a state alternately overlapping one another multiple rotation side brake plates (47) and multiple non rotation side brake plates (48),are arranged in a brake case (32) further outwards in the radial direction than a motor shaft(25). Of these rotation side brake plates (47) and non rotation side brake plates (48), a friction material (48B) is provided only on the non rotation side brake plates (48). By this means the disclosed wet brake device allows the rotation side brake plates (47) to be lighter weight and reduces drag resistance of the rotation side brake plates (47) which rotate even when the brakes are released.

No. of Pages : 56 No. of Claims : 4

(12) PATENT APPLICATION PUBLICATION
(19) INDIA
(22) Date of filing of Application :24/12/2012
(21) Application No.4105/KOLNP/2012 A
(43) Publication Date : 05/07/2013

(54) Title of the invention : WET BRAKE DEVICE

(51) International classification :F16D65/853,B60T5/00,E02F9/12
(31) Priority Document No :2010-224791
(32) Priority Date :04/10/2010
(33) Name of priority country :Japan
(86) International Application No :PCT/JP2011/072380
Filing Date :29/09/2011
(87) International Publication No :WO 2012/046623
(61) Patent of Addition to Application Number :NA
Filing Date :NA
(62) Divisional to Application Number :NA
Filing Date :NA

(71)**Name of Applicant :**
1)HITACHI CONSTRUCTION MACHINERY CO. LTD.
Address of Applicant :5-1, KORAKU 2-CHOME, BUNKYO-KU, TOKYO 112-0004, Japan
(72)**Name of Inventor :**
1)OKUNO NAOYUKI
2)KOMARU YUTAKA
3)NIIDOME TAKASHI

(57) Abstract :
In a state alternately overlapping one another multiple rotation side brake plates (47) and multiple non rotation side brake plates (48) are arranged in a brake case (32) further outwards in the radial direction than a motor shaft (25). In addition to providing the non rotation side brake plates (48) with a friction material (48B) the frictional engagement surface (48E) of the friction material (48B) is provided with oil grooves (48F). The disclosed wet brake device is configured such that when braking force is applied to the motor shaft (25) by means of a brake piston (49), a lubricant oil (59) which enters from a lubricant inlet (40) into the brake case (32), flows only through the oil grooves (48F) between the multiple rotation side brake plates (47) and the multiple non rotation side brake plates (48) from the outer diameter side towards the inner diameter side. By this means the lubricant oil (59) which flows into the brake case (32) efficiently cools the frictional engagement surface (48E).

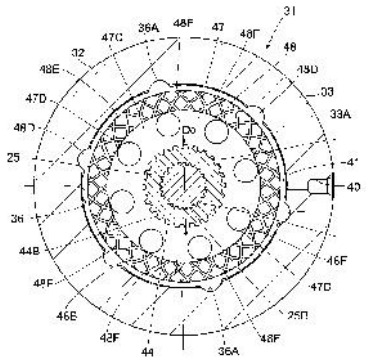

No. of Pages : 61 No. of Claims : 6

(12) PATENT APPLICATION PUBLICATION
(19) INDIA
(22) Date of filing of Application :06/02/2013
(21) Application No.314/KOLNP/2013 A
(43) Publication Date : 05/07/2013

(54) Title of the invention : DC/DC CONVERTER

(51) International classification :H02M7/219,H02M3/28
(31) Priority Document No :2010-207287
(32) Priority Date :15/09/2010
(33) Name of priority country :Japan
(86) International Application No :PCT/IB2011/001980
Filing Date :30/08/2011
(87) International Publication No :WO 2012/035386
(61) Patent of Addition to Application Number :NA
Filing Date :NA
(62) Divisional to Application Number :NA
Filing Date :NA

(71)**Name of Applicant :**
1)PANASONIC CORPORATION
Address of Applicant :1006, Oaza Kadoma, Kadoma-shi, Osaka 571-8501, Japan
(72)**Name of Inventor :**
1)TAMURA Hideki
2)KIDERA Kazunori
3)KOSHIN Hiroaki

(57) Abstract :
Provided is a DC/DC converter having a DC input terminal to which a DC power supply is input, a transformer, and a bidirectional switching element on the primary side of the transformer.

No. of Pages : 68 No. of Claims : 14

(12) PATENT APPLICATION PUBLICATION
(19) INDIA
(22) Date of filing of Application :07/02/2013
(21) Application No.334/KOLNP/2013 A
(43) Publication Date : 05/07/2013

(54) Title of the invention : OXYGEN SCAVENGING COMPOSITIONS AND PACKAGING COMPRISING SAID COMPOSITIONS

(51) International classification :B65D
(31) Priority Document No :60/652,888
(32) Priority Date :15/02/2005
(33) Name of priority country :U.S.A.
(86) International Application No :PCT/US2006/005216
Filing Date :15/02/2006
(87) International Publication No :WO 2006/088889
(61) Patent of Addition to Application Number :NA
Filing Date :NA
(62) Divisional to Application Number :3053/KOLNP/2007
Filed on :20/08/2007

(71)**Name of Applicant :**
1)CONSTAR INTERNATIONAL INC
Address of Applicant :ONE CROWN WAY, PHILADELPHIA, PENNSYLVANIA 19154 U.S.A.
(72)**Name of Inventor :**
1)GIRISH NILKANTH DESHPANDE
2)VENKAT GOVINDARAJAN
3)JOHN ROST
4)ALAN SILVERMAN

(57) Abstract :
The instant invention concerns a composition comprising a base polymer, at least one compound of the fonnula E-(1·E)x wherein: E is formula (I)or formula (II) and L is a linking group; and at least one transition metal in 3 positive oxidation state. The invention also concerns packages containing walls comprising such compositions, methods of forming such packages, and methods of packaging an oxygen-sensitive item within such a package.

No. of Pages : 60 No. of Claims : 21

(12) PATENT APPLICATION PUBLICATION
(19) INDIA
(22) Date of filing of Application :12/02/2013
(21) Application No.373/KOLNP/2013 A
(43) Publication Date : 05/07/2013

(54) Title of the invention : ADMISSION CONTROL FOR BROADCAST TRANSMISSIONS

(51) International classification :H04W4/06
(31) Priority Document No :NA
(32) Priority Date :NA
(33) Name of priority country :NA
(86) International Application No :PCT/SE2010/050855
Filing Date :19/07/2010
(87) International Publication No :WO 2012/011854
(61) Patent of Addition to Application Number :NA
Filing Date :NA
(62) Divisional to Application Number :NA
Filing Date :NA

(71)**Name of Applicant :**
1)TELEFONAKTIEBOLAGET L M ERICSSON (PUBL)
Address of Applicant :S-164 83 STOCKHOLM Sweden
(72)**Name of Inventor :**
1)DREVÖ, MARKUS

(57) Abstract :
The present invention relates to a network node and a method in a network node for admission control of broadcast transmission sessions. The method comprises receiving a broadcast transmission session start request for a first broadcast transmission session, obtaining at least a first traffic statistics parameter related to said first broadcast transmission session, obtaining the available bit rate for the broadcast transmission area, and obtaining a resynchronisation parameter indicating the time between resynchronisation of transmissions for said broadcast transmission session. The method also calculates a first expected bit error rate based on said at least first traffic statistics parameter, said available bit rate and said resynchronisation parameter, and admits said first broadcast transmission session if said first expected bit error rate is less than a first bit error rate threshold.

No. of Pages : 33 No. of Claims : 15

(12) PATENT APPLICATION PUBLICATION
(19) INDIA
(22) Date of filing of Application :14/02/2013

(21) Application No.392/KOLNP/2013 A
(43) Publication Date : 05/07/2013

(54) Title of the invention : APPARATUS AND METHOD FOR DISTRIBUTING SAMPLES

(51) International classification :B42D1/00,B42D3/12,A45D40/00
(31) Priority Document No :12/847,870
(32) Priority Date :30/07/2010
(33) Name of priority country :U.S.A.
(86) International Application No :PCT/US2011/045739
Filing Date :28/07/2011
(87) International Publication No :WO 2012/016054
(61) Patent of Addition to Application Number :NA
Filing Date :NA
(62) Divisional to Application Number :NA
Filing Date :NA

(71)**Name of Applicant :**
1)SAMPLEMAX INC.
Address of Applicant :1440 PARADISE POINT DRIVE,#7 NAVARRE, FL 32566 U.S.A.
(72)**Name of Inventor :**
1)EVERT ,JOHN, R

(57) Abstract :
The present invention provides an apparatus for distributing samples (102). The apparatus includes a sample package (110) and a publication (202). The sample package (110) comprises a sample product (102) to be distributed and a sample backing (104). The sample package (110) is joined to the publication (202) such that the sample package (110) is partially inserted into the publication (202) and the sample product (102) is external to the publication (202).

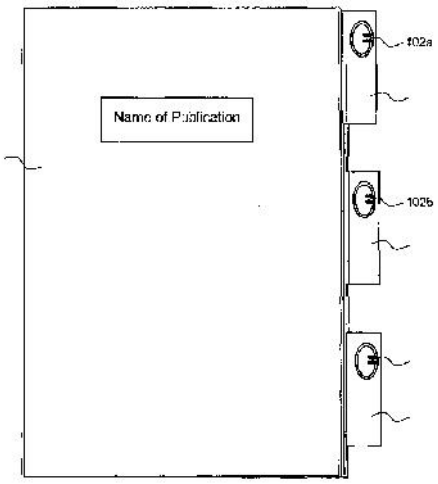

No. of Pages : 59 No. of Claims : 54

(12) PATENT APPLICATION PUBLICATION
(19) INDIA
(22) Date of filing of Application :19/02/2013
(21) Application No.413/KOLNP/2013 A
(43) Publication Date : 05/07/2013

(54) Title of the invention : BIPOLAR BATTERY

(51) International classification :H01M2/34,H01M2/22,H01M2/26
(31) Priority Document No :2010-166858
(32) Priority Date :26/07/2010
(33) Name of priority country :Japan
(86) International Application No :PCT/JP2011/066386
Filing Date :19/07/2011
(87) International Publication No :WO 2012/014730
(61) Patent of Addition to Application Number :NA
Filing Date :NA
(62) Divisional to Application Number :NA
Filing Date :NA

(71)**Name of Applicant :**
1)NISSAN MOTOR CO., LTD.
Address of Applicant :2,TAKARA-CHO,KANAGAWA-KU YOKOHAMA-SHI, KANAGAWA 221-0023,Japan
(72)**Name of Inventor :**
1)MOTOHARU, OBIKA
2)HIDEAKI, HORIE
3)YOSHIAKI, NITTA

(57) Abstract :
Provided is a bipolar battery (1) comprising: a power generation element (10) in which a plurality of bipolar electrodes (11) obtained by forming electrode layers (112,113) on the front and back of a collector (111), are stacked with electrolyte layers (12) interposed therebetween; an elastic metal part (21) provided so as to be in contact with the power generation element (10), to be in point or linear contact with the power generation element (10) when external force is not applied, and to be in surface contact with the power generation element (10) when external force is applied; and a casing (30) that is provided so as to accommodate the power generation element (10) and the elastic metal part (21), is kept at an internal pressure below the atmospheric pressure, and causes the elastic metal part (21) to be brought into surface contact with the power generation element (10) by the pressure difference between the internal pressure and atmospheric pressure.

No. of Pages : 31 No. of Claims : 8

(12) PATENT APPLICATION PUBLICATION
(19) INDIA
(22) Date of filing of Application :31/01/2013
(21) Application No.279/KOLNP/2013 A
(43) Publication Date : 05/07/2013

(54) Title of the invention : FRAME FOR GLASSES, MASKS FOR PROFESSIONAL OR SPORTS USE, AND THE LIKE

(51) International classification :G02C11/08,A61F9/02,G02C5/12
(31) Priority Document No :PD2010A000237
(32) Priority Date :27/07/2010
(33) Name of priority country :Italy
(86) International Application No :PCT/EP2011/061434
Filing Date :06/07/2011
(87) International Publication No :WO 2012/013465
(61) Patent of Addition to Application Number :NA
Filing Date :NA
(62) Divisional to Application Number :NA
Filing Date :NA

(71)**Name of Applicant :**
1)GEOX S.P.A.
Address of Applicant :Via Feltrina Centro, 16, 31044 Montebelluna, Localit Biadene - (Treviso), ITALY
(72)**Name of Inventor :**
1)POLEGATO MORETTI Mario

(57) Abstract :
A frame (10, 100) for glasses masks for professional or sports use, and the like adapted to support at least one corrective and/or protective lens (101) in a position which during use is located in front of the ocular region of the user, the frame (10, 100) having at least one through opening (11a, 11b, 28a 28b, 103a, 103b) which is open toward the skin of the user who is wearing it, at least one waterproof and vapor permeable functional insert (12, 30, 104) being provided which is arranged so as to obstruct in a vapor permeable manner the at least one opening (11a, 11b, 28a, 28b 103a, 103b) in order to allow the vapor permeation of the skin of the user, preventing a return of condensation toward the skin.

No. of Pages : 24 No. of Claims : 10

(12) PATENT APPLICATION PUBLICATION
(19) INDIA
(22) Date of filing of Application :06/02/2013
(21) Application No.317/KOLNP/2013 A
(43) Publication Date : 05/07/2013

(54) Title of the invention : 3-D GENOMIC REGION OF INTEREST SEQUENCING STRATEGIES

(51) International classification :C12Q1/68
(31) Priority Document No :61/362,778
(32) Priority Date :09/07/2010
(33) Name of priority country :U.S.A.
(86) International Application No :PCT/NL2011/050504
Filing Date :08/07/2011
(87) International Publication No :WO 2012/005595
(61) Patent of Addition to Application Number :NA
Filing Date :NA
(62) Divisional to Application Number :NA
Filing Date :NA

(71)**Name of Applicant :**
1)CERGENTIS B.V.
Address of Applicant :8, Uppsalalaan NL-3584 CT Utrecht The Netherlands
2)KONINKLIJKE ACADEMIE VAN WETENSCHAPPEN
(72)**Name of Inventor :**
1)VAN MIN, Max, Jan
2)DE LAAT, Wouter, Leonard

(57) Abstract :
The invention relates to methods for determining the sequence of a genomic region of interest comprising a target nucleotide sequence comprising, fragmenting a crosslinked DNA ligating the fragmented cross linked DNA reversing the crosslinking and determining at least part of the sequences of ligated DNA fragments which comprise a target nucleotide sequence.

No. of Pages : 41 No. of Claims : 28

(12) PATENT APPLICATION PUBLICATION
(19) INDIA
(22) Date of filing of Application :13/02/2013
(21) Application No.376/KOLNP/2013 A
(43) Publication Date : 05/07/2013

(54) Title of the invention : LITHIUM ION SECONDARY BATTERY,BATTERY CAPACITY RECOVERY APPARATUS, AND BATTERY CAPACITY RECOVERY METHOD

(51) International classification :H01M10/058,H01M4/13,H01M10/0525
(31) Priority Document No :2010-161605
(32) Priority Date :16/07/2010
(33) Name of priority country :Japan
(86) International Application No :PCT/JP2011/065817
Filing Date :11/07/2011
(87) International Publication No :WO 2012/008421
(61) Patent of Addition to Application Number :NA
Filing Date :NA
(62) Divisional to Application Number :NA
Filing Date :NA

(71)**Name of Applicant :**
1)NISSAN MOTOR CO. ,LTD.
Address of Applicant :2,TAKARA-CHO,KANAGAWA-KU YOKOHAMA-SHI,KANAGAWA 221-0023 Japan
(72)**Name of Inventor :**
1)SAITO , TAKAMITSU
2)SAKAGUCHI, SHINICHIRO
3)IWASAKI, YASUKAZU
4)SAKAMOTO , KAZUYUKI

(57) Abstract :
Disclosed is a lithium ion secondary battery which comprises: an outer casing member that is filled with an electrolyte; a collector that is contained in the outer casing member and provided with an electrode layer which contains an active material and is electrically connected with the collector; an insulating layer that is provided on the collector; and a low potential member that is provided on the insulating layer, has a lower oxidation-reduction potential than the active material of the electrode layer, and has an ability to reduce the active material.

No. of Pages : 31 No. of Claims : 14

(12) PATENT APPLICATION PUBLICATION
(19) INDIA
(22) Date of filing of Application :14/02/2013
(21) Application No.394/KOLNP/2013 A
(43) Publication Date : 05/07/2013

(54) Title of the invention : APPARATUS FOR PERFORMING HEAT TREATMENT

(51) International classification :A61F7/12
(31) Priority Document No :10176941.2
(32) Priority Date :15/09/2010
(33) Name of priority country :EPO
(86) International Application No :PCT/EP2011/065496
Filing Date :07/09/2011
(87) International Publication No :WO 2012/034914
(61) Patent of Addition to Application Number :NA
Filing Date :NA
(62) Divisional to Application Number :NA
Filing Date :NA

(71)**Name of Applicant :**
1)PNN MEDICAL SA
Address of Applicant :AV. RIOND-BOSSON 14, CH-1110 MORGES Switzerland
(72)**Name of Inventor :**
1)WALLSTEN, HANS I.

(57) Abstract :
The present invention relates to an apparatus for performing heat treatment of a bodily cavity in a mammal. The apparatus comprises a catheter intended for insertion into said bodily cavity, an inflatable balloon surrounding a distal end of said catheter in a liquid tight manner which balloon is adapted in use of said apparatus to be inflated and dilated in said bodily cavity, control means operatively connected to said balloon by at least one oscillation lumen and being provided with an oscillation assembly adapted to drive a heat transmitting fluid within said apparatus, and heating means adapted to heat said heat transmitting fluid. Said control means are adapted to control pressure and temperature of said heat transmitting fluid. The heating means have a heat emitting portion and a heat receiving portion which is use of the apparatus are positioned in thermal contact with each other, and which are separable from each other.

No. of Pages : 17 No. of Claims : 10

(12) PATENT APPLICATION PUBLICATION
(21) Application No.416/KOLNP/2013 A
(19) INDIA
(22) Date of filing of Application :19/02/2013
(43) Publication Date : 05/07/2013

(54) Title of the invention : BIPOLAR ELECTRODE, BIPOLAR SECONDARY BATTERY USING THE SAME AND METHOD FOR MANUFACTURING BIPOLAR ELECTRODE

(51) International classification :H01M10/058,H01M4/13,H01M4/139
(31) Priority Document No :2010-168984
(32) Priority Date :28/07/2010
(33) Name of priority country :Japan
(86) International Application No :PCT/JP2011/066580
Filing Date :21/07/2011
(87) International Publication No :WO 2012/014780
(61) Patent of Addition to Application Number :NA
Filing Date :NA
(62) Divisional to Application Number :NA
Filing Date :NA

(71)**Name of Applicant :**
1)NISSAN MOTOR CO., LTD.
Address of Applicant :2,TAKARA-CHO,KANAGAWA-KU YOKOHAMA-SHI,KANAGAWA 221-0023,Japan
(72)**Name of Inventor :**
1)MASANOBU, SATO
2)YASUO, OHTA
3)HIDEAKI, HORIE
4)MASANORI, AOYAGI

(57) Abstract :
A bipolar electrode comprising: a first active material layer, for example, a positive active material layer, said first active material layer being formed on one face of a collector in such a manner as to contain a first active material; and a second active material layer, for example, a negative active material layer, said second active material layer being formed on the other face of the collector in such a manner as to contain a second active material that has a smaller compression strength than the first active material. A density-adjusting additive, which is an additive material having a larger compression strength than the compression strength of the second active material, is added to the second active material layer.

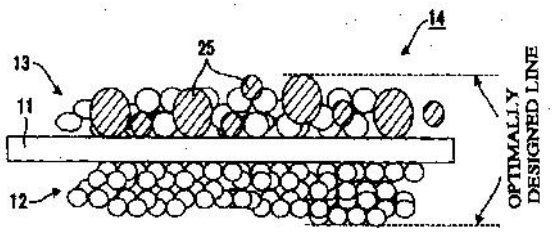

No. of Pages : 40 No. of Claims : 10

(12) PATENT APPLICATION PUBLICATION
(19) INDIA
(22) Date of filing of Application :04/02/2013
(21) Application No.296/KOLNP/2013 A
(43) Publication Date : 05/07/2013

(54) Title of the invention : INTRAVENOUS CYTOMEGALOVIRUS HUMAN IMMUNE GLOBULIN AND MANUFACTURING METHOD THEREOF

(51) International classification :A61K39/395,A61P31/12
(31) Priority Document No :NA
(32) Priority Date :NA
(33) Name of priority country :NA
(86) International Application No :PCT/CN2011/078485
Filing Date :16/08/2011
(87) International Publication No :WO 2013/023362
(61) Patent of Addition to Application Number :NA
Filing Date :NA
(62) Divisional to Application Number :NA
Filing Date :NA

(71)**Name of Applicant :**
1)SHENZHEN WEIGUANG BIOLOGICAL PRODUCTS CO., LTD.
Address of Applicant :No. 2, Guangqiao Road, Guangming New District, Shenzhen, Guangdong, P R China
(72)**Name of Inventor :**
1)ZHANG, Yunjia
2)GUO, Caiping
3)DING, Yujiang
4)SONG, Qingshuang
5)ZHANG, Xin
6)WANG, Jincai
7)WU, Enying
8)ZHANG, Pei
9)CHEN, Yuqin
10)LI, Hui
11)HUANG, Weirong
12)DAI, Meilan
13)ZHANG, Yanpeng
14)WANG, Chunhua
15)LUO, Shan
16)HUANG, Qianyun
17)LIU, Yongdi
18)WU, Kaiyong

(57) Abstract :
Disclosed are a cytomegalovirus human immunoglobulin for intravenous injection and a preparation method therefor. The cytomegalovirus human immunoglobulin for intravenous injection according to the present invention has a specific activity of no less than 2.5 PEI U/mg an anti CMV titer of no less than 100 PEI U/ml a purity of more than 98.2%, and a protein content of 51 to 55 mg/ml. In the present invention, octanoic acid precipitation and the anion exchange chromatography are adopted instead of a partial ethanol precipitation step in the traditional cryogenic ethanol process and a process of inactivating virus with octanoic acid and removing virus with a nano membrane is adopted.

No. of Pages : 40 No. of Claims : 5

(12) PATENT APPLICATION PUBLICATION
(21) Application No.319/KOLNP/2013 A
(19) INDIA
(22) Date of filing of Application :06/02/2013
(43) Publication Date : 05/07/2013

(54) Title of the invention : RESAMPLING OUTPUT SIGNALS OF QMF BASED AUDIO CODECS

(51) International classification :G10L21/00,G10L19/00
(31) Priority Document No :61/373,126
(32) Priority Date :12/08/2010
(33) Name of priority country :U.S.A.
(86) International Application No :PCT/EP2011/063848
Filing Date :11/08/2011
(87) International Publication No :WO 2012/020090
(61) Patent of Addition to Application Number :NA
Filing Date :NA
(62) Divisional to Application Number :NA
Filing Date :NA

(71)**Name of Applicant :**
1)FRAUNHOFER-GESELLSCHAFT ZUR FÖRDERUNG DER ANGEWANDTEN FORSCHUNG E.V.
Address of Applicant :Hansastrasse 27c, 80686 Muenchen, Germany
(72)**Name of Inventor :**
1)LOHWASSER, Markus
2)JANDER, Manuel
3)NEUENDORF, Max
4)GEIGER, Ralf
5)SCHNELL, Markus
6)HILDENBRAND, Matthias
7)CHALUPKA, Tobias

(57) Abstract :
An apparatus for processing an audio signal is provided. The apparatus comprises a configurable first audio signal processor (110) for processing the audio signal,(s) in accordance with different configuration settings (conf) to obtain a processed audio signal (s), wherein the apparatus is adapted so that different configuration settings (conf) result in different sampling rates (sr) of the processed audio signal (s). The apparatus furthermore comprises n analysis filter bank (120) having a first number (c) of analysis filter bank channels, a synthesis filter bank (130) having a second number (c) of synthesis filter bank channels, a second audio processor (140) being adapted to receive and process an audio signal (s) having a predetermined sampling rate (sr) and a controller (150) for controlling the first number (c) of analysis filter bank channels or the second number (c) of synthesis filter bank channels in accordance with a configuration setting (conf).

No. of Pages : 51 No. of Claims : 14

(12) PATENT APPLICATION PUBLICATION
(19) INDIA
(22) Date of filing of Application :13/02/2013
(21) Application No.377/KOLNP/2013 A
(43) Publication Date : 05/07/2013

(54) Title of the invention : HIGH FLOW AND STIFF POLYMER MATERIAL WITH GOOD TRANSPARENCY AND IMPACT PROPERTIES

(51) International classification :C08L23/10,C08F297/08
(31) Priority Document No :10177133.5
(32) Priority Date :16/09/2010
(33) Name of priority country :EPO
(86) International Application No :PCT/EP2011/065703
Filing Date :12/09/2011
(87) International Publication No :WO 2012/034956
(61) Patent of Addition to Application Number :NA
Filing Date :NA
(62) Divisional to Application Number :NA
Filing Date :NA

(71)**Name of Applicant :**
1)BOREALIS AG
Address of Applicant :IZD TOWER WAGRAMERSTRASSE 17-19 A-1220 VIENNA Austria
(72)**Name of Inventor :**
1)KOCK, CORNELIA
2)GREIN, CHRISTELLE
3)PRADES, FLORAN

(57) Abstract :
Polypropylene composition having a melt flow rate MFR2(230 °C) of equal or above 15 g/10min comprising: (a) a crystalline polypropylene matrix; (b) an elastomeric propylene copolymer phase having a propylene content in the range of 40 to 80 wt. % and an intrinsic viscosity in the range of more than 0.7 to less or equal 2.5 dl/g; (c) a first polyethylene having a density in the range 905 to 925 kg/m3 and melt flow rate MFR2(190 °C) of below 30 g/10min; (d) a second polyethylene having a density of above 915 kg/m3, and a melt flow rate MFR2 (190 °C) of equal or above 30 g/10min.

No. of Pages : 49 No. of Claims : 15

(12) PATENT APPLICATION PUBLICATION
(21) Application No.395/KOLNP/2013 A
(19) INDIA
(22) Date of filing of Application :15/02/2013
(43) Publication Date : 05/07/2013

(54) Title of the invention : FUEL CELL SYSTEM AND OPERATING METHOD THEREOF

(51) International classification :H01M8/24,H01M8/04,H01M8/06
(31) Priority Document No :2010-163747
(32) Priority Date :21/07/2010
(33) Name of priority country :Japan
(86) International Application No :PCT/JP2011/066477
Filing Date :20/07/2011
(87) International Publication No :WO 2012/011501
(61) Patent of Addition to Application Number :NA
Filing Date :NA
(62) Divisional to Application Number :NA
Filing Date :NA

(71)**Name of Applicant :**
1)NISSAN MOTOR CO., LTD.
Address of Applicant :2,TAKARA-CHO,KANAGAWA-KU YOKOHAMA-SHI, KANAGAWA 221-0023 Japan
(72)**Name of Inventor :**
1)HAYATO CHIKUGO
2)KENJI YONEKURA
3)KEN NAKAYAMA

(57) Abstract :
A fuel cell system comprises a fuel cell stack (S) that is formed by layering a plurality of unit cells (C) in the horizontal direction, said fuel cell stack (S) having a manifold that carries out supply and exhaust of gas for reaction between each unit cell (C) within the layering thereof. The fuel cell system further comprises drainage paths (1A, 1B) from the manifold (M) for draining anode off-gas, on both ends, respectively, of the fuel cell stack (S) in the unit cell layering direction.

No. of Pages : 49 No. of Claims : 13

(12) PATENT APPLICATION PUBLICATION
(19) INDIA
(22) Date of filing of Application :19/02/2013
(21) Application No.417/KOLNP/2013 A
(43) Publication Date : 05/07/2013

(54) Title of the invention : WATER SOLUBLE SOLID PHASE PEPTIDE SYNTHESIS

(51) International classification :C07K1/06
(31) Priority Document No :61/373,989
(32) Priority Date :16/08/2010
(33) Name of priority country :U.S.A.
(86) International Application No :PCT/US2011/047763
Filing Date :15/08/2011
(87) International Publication No :WO 2012/024224
(61) Patent of Addition to Application Number :NA
Filing Date :NA
(62) Divisional to Application Number :NA
Filing Date :NA

(71)**Name of Applicant :**
1)CEM CORPORATION
Address of Applicant :3100 SMITH FARM ROAD, P.O. BOX 200, MATTHEWS, NC 28106-0200 U.S.A.
(72)**Name of Inventor :**
1)COLLINS, JONATHAN, M.

(57) Abstract :
A solid phase peptide synthesis method is disclosed. The method includes the steps of deprotecting an amino group in its protected form that is protected with a protecting group containing a Michael acceptor site composed of an a,B-unsaturated sulfone in a solvent selected from the group consisting of water, alcohol and mixtures of water and alcohol; washing the deprotected acid in a solvent selected from the group consisting of water, alcohol, and mixtures of water and alcohol; coupling the deprotected acid to a resin-based peptide or a resin-based amino acid in a solvent selected from the group consisting of water, alcohol, and mixtures of water and alcohol; and washing the coupled composition in a solvent selected from the group consisting of water, alcohol, and mixtures of water and alcohol.

No. of Pages : 23 No. of Claims : 15

(12) PATENT APPLICATION PUBLICATION
(19) INDIA
(22) Date of filing of Application :15/02/2013
(21) Application No.399/KOLNP/2013 A
(43) Publication Date : 05/07/2013

(54) Title of the invention : A SAFETY MECHANISM FOR A WELL, A WELL COMPRISING THE SAFETY MECHANISM AND RELATED METHODS

(51) International classification :E21B 41/00
(31) Priority Document No :1012175.4
(32) Priority Date :20/07/2010
(33) Name of priority country :U.K.
(86) International Application No :PCT/GB2011/051377
Filing Date :20/07/2011
(87) International Publication No :WO 2012/010897
(61) Patent of Addition to Application Number :NA
Filing Date :NA
(62) Divisional to Application Number :NA
Filing Date :NA

(71)**Name of Applicant :**
1)METROL TECHNOLOGY LIMITED
Address of Applicant :UNIT 24, KIRKHILL PLACE, DYCE, ABERDEEN, ABERDEENSHIRE AB21 0GU, U.K.
(72)**Name of Inventor :**
1)ROSS, SHAUN COMPTON
2)JARVIS, LESLIE DAVID

(57) Abstract :
A safety mechanism comprising:an obstructing member moveable between a first position where fluid flow is permitted, and a second position where fluid flow is restricted preferably blocked;a movement mechanism; and a wireless receiver, often an acoustic transceiver, adapted to receive a wireless signal;wherein the movement mechanism is operable to move the obstructing member from one of the first and second positions to the other of the first and second positions in response to a change in the signal being received by the wireless receiver. Embodiments of the invention thus provide a safety mechanism for a well such as a valve, packer, plug or sleeve, which can be operated wirelessly and so may allow operation of safety mechanisms in a well even when emergency situations have occurred.

No. of Pages : 40 No. of Claims : 45

(12) PATENT APPLICATION PUBLICATION
(21) Application No.3990/KOLNP/2012 A
(19) INDIA
(22) Date of filing of Application :14/12/2012
(43) Publication Date : 05/07/2013

(54) Title of the invention : MOBILE WORK DEVICE HAVING A SUPPORT CONSTRUCTION

(51) International classification :E04G21/04,B66C23/78
(31) Priority Document No :10 2010 043 957.6
(32) Priority Date :16/11/2010
(33) Name of priority country :Germany
(86) International Application No :PCT/EP2011/068068
Filing Date :17/10/2011
(87) International Publication No :WO 2012/065795
(61) Patent of Addition to Application Number :NA
Filing Date :NA
(62) Divisional to Application Number :NA
Filing Date :NA

(71)**Name of Applicant :**
1)PUTZMEISTER ENGINEERING GMBH
Address of Applicant :Max-Eyth-Strasse 10, 72631 Aichtal, Germany
(72)**Name of Inventor :**
1)FÜGEL Dietmar

(57) Abstract :
The invention relates to a mobile work appliance, in particular to an automatic concrete pump. The work appliance substantially comprises a chassis (12), two front and two rear supporting jibs (38,40) which are extendable relative to the chassis (12) from a transport position into at least one working position and are each supportable by a supporting leg (42) on a base, with the chassis being raised, and a drive unit (47) for controlling working assemblies and/or the supporting jibs. A particular characteristic of the invention is that at least one of the supporting jibs (40) having a support or hollow chamber profile has a transverse aperture (48) which can be designed for example, as a housing for an auxiliary assembly (52) of the drive unit.

No. of Pages : 17 No. of Claims : 10

(12) PATENT APPLICATION PUBLICATION
(19) INDIA
(22) Date of filing of Application :14/12/2012
(21) Application No.3991/KOLNP/2012 A
(43) Publication Date : 05/07/2013

(54) Title of the invention : MICROBIOLOGICAL CONTROL IN OIL AND GAS OPERATIONS

(51) International classification :C09K8/524,C09K3/32,C11B1/00
(31) Priority Document No :12/816,876
(32) Priority Date :16/06/2010
(33) Name of priority country :U.S.A.
(86) International Application No :PCT/US2011/040626
Filing Date :16/06/2011
(87) International Publication No :WO 2011/159859
(61) Patent of Addition to Application Number :NA
Filing Date :NA
(62) Divisional to Application Number :NA
Filing Date :NA

(71)**Name of Applicant :**
1)NALCO COMPANY
Address of Applicant :1601 W. Diehl Road, Naperville, Illinois 60563-1198, U.S.A.
(72)**Name of Inventor :**
1)DIAZ, Raul O.

(57) Abstract :
A fracturing fluid may include water; at least one polymeric viscosifier; at least one proppant; and a solution of peracetic acid in an amount effective to inhibit bacterial growth. Other embodiments are directed to methods for inhibiting bacterial contamination in a fracturing fluid and/or ballast water.

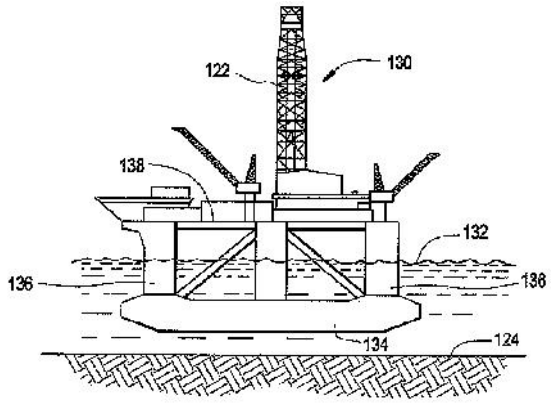

No. of Pages : 13 No. of Claims : 15

(12) PATENT APPLICATION PUBLICATION
(19) INDIA
(22) Date of filing of Application :14/12/2012
(21) Application No.3992/KOLNP/2012 A
(43) Publication Date : 05/07/2013

(54) Title of the invention : METHODS AND COMPOSITIONS OF BENEFICIATION

(51) International classification :B01D17/022,C02F1/24,B01D17/035
(31) Priority Document No :12/817,452
(32) Priority Date :17/06/2010
(33) Name of priority country :U.S.A.
(86) International Application No :PCT/US2011/040798
Filing Date :17/06/2011
(87) International Publication No :WO 2011/159964
(61) Patent of Addition to Application Number :NA
Filing Date :NA
(62) Divisional to Application Number :NA
Filing Date :NA

(71)**Name of Applicant :**
1)NALCO COMPANY
Address of Applicant :1601 W. Diehl Road, Naperville, Illinois 60563-1198, U.S.A.
(72)**Name of Inventor :**
1)TRAN Bo

(57) Abstract :
Methods and compositions for separating materials are provided. In an embodiment, the present invention provides a method of separating a first material from a second material. For example, the method can comprise mixing the first material and the second material in a slurry with a beneficiation composition. The beneficiation composition can comprise one or more fatty acid by-products derived from a biodiesel manufacturing process. Air bubbles can be provided in the slurry to form bubble-particle aggregates with the first material and the bubble-particle aggregates can be allowed to be separated from the second material.

No. of Pages : 17 No. of Claims : 9

(12) PATENT APPLICATION PUBLICATION
(21) Application No.421/KOLNP/2013 A
(19) INDIA
(22) Date of filing of Application :19/02/2013
(43) Publication Date : 05/07/2013

(54) Title of the invention : ANTI-FDP MONOCLONAL ANTIBODY, FDP MEASUREMENT REAGENT AND REAGENT KIT USING SAME, AND FDP MEASUREMENT METHOD

(51) International classification	:C12N15/02,C07K16/18,G01N33/53
(31) Priority Document No	:2010-172222
(32) Priority Date	:30/07/2010
(33) Name of priority country	:Japan
(86) International Application No	:PCT/JP2011/067327
Filing Date	:28/07/2011
(87) International Publication No	:WO 2012/014997
(61) Patent of Addition to Application Number	:NA
Filing Date	:NA
(62) Divisional to Application Number	:NA
Filing Date	:NA

(71)**Name of Applicant :**
1)SYSMEX CORPORATION
Address of Applicant :5-1,WAKINOHAMA-KAIGANDORI 1-CHOME,CHUO-KU,KOBE- SHI, HYOGO 6510073 Japan
(72)**Name of Inventor :**
1)OKITSU ,NAOYA
2)KOBAYASHI,KATSUSHI
3)NAKAJIMA, NORIAKI
4)MURAKAMI, MASUMI
5)SAKAGUCHI, KOUJI
6)ASAEDA, AYUMI
7)SUGIMOTO,MAYUMI

(57) Abstract :
Disclosed is an anti FDP monoclonal antibody selected from a first second and third monoclonal antibody each having a different reactivity towards FDP. Further disclosed are: an FDP measurement reagent and reagent kit that use such an anti FDP monoclonal antibody and an FDP measurement method.

No. of Pages : 31 No. of Claims : 10

(12) PATENT APPLICATION PUBLICATION
(21) Application No.342/KOLNP/2013 A
(19) INDIA
(22) Date of filing of Application :08/02/2013
(43) Publication Date : 05/07/2013

(54) Title of the invention : CONE/FRICTION RING TRANSMISSION AND METHOD FOR A CONE/FRICTION RING TRANSMISSION

(51) International classification :F16H15/42,F16H61/664
(31) Priority Document No :10 2010 034 502.4
(32) Priority Date :16/08/2010
(33) Name of priority country :Germany
(86) International Application No :PCT/DE2011/001597
Filing Date :16/08/2011
(87) International Publication No :WO 2012/022303
(61) Patent of Addition to Application Number :NA
Filing Date :NA
(62) Divisional to Application Number :NA
Filing Date :NA

(71)**Name of Applicant :**
1)ROHS Ulrich
Address of Applicant :Roonstrasse 11, 52351 D¼ren Germany
2)DRÄGER Christoph
3)BRANDWITTE Werner
(72)**Name of Inventor :**
1)ROHS Ulrich
2)DRÄGER Christoph
3)BRANDWITTE Werner

(57) Abstract :
In order for it to be also possible to transmit relatively high torques in an operationally reliable manner with low power loss and with a low or inexpensive design outlay in a bevel friction ring gear mechanism, consisting of at least two component transmissions which are configured as bevel friction ring gear mechanisms and have a first adjusting device for a friction ring of the first component transmission and a second adjusting device for a friction ring of the second component transmission, wherein the bevel friction ring gear mechanism has a regulating device for regulating an axial position of the friction rings, it is proposed that the regulating device has at least one first part regulating device with a first reference variable and a second part regulating device with a second reference variable which is separate from the first reference variable, wherein the first component transmission has the first part regulating device for regulating the position of the friction ring of the first component transmission, and the second component transmission has the first part regulating device and the second part regulating device but at least the second part regulating device for regulating the position of the friction ring of the second part transmission.

No. of Pages : 79 No. of Claims : 21

(12) PATENT APPLICATION PUBLICATION
(19) INDIA
(22) Date of filing of Application :06/11/2012
(21) Application No.3421/KOLNP/2012 A
(43) Publication Date : 05/07/2013

(54) Title of the invention : SUCTION RETRACTOR

(51) International classification :A61B1/32,A61B17/02
(31) Priority Document No :2010902064
(32) Priority Date :13/05/2010
(33) Name of priority country :Australia
(86) International Application No :PCT/AU2011/000567
Filing Date :13/05/2011
(87) International Publication No :WO 2011/140612
(61) Patent of Addition to Application Number :NA
Filing Date :NA
(62) Divisional to Application Number :NA
Filing Date :NA

(71)**Name of Applicant :**
1)LIVAC PTY LTD
Address of Applicant :8 Melaleuca Court, Warrnambool, Victoria 3280, Australia
(72)**Name of Inventor :**
1)GAN, Philip

(57) Abstract :
The subject invention provides a suction retractor comprising a flexible continuous dam which forms a closed loop of any shape and which defines one or more inlet opening into an interior of the closed loop, so that suction can be applied into an interior of the continuous dam. The suction retractor may further comprise a suction tube defining a suction channel, the suction tube attached to or attachable to the continuous dam and when attached the suction channel continuous with the one or more inlet. The one or more inlet may open to a continuous channel extending throughout an interior of the closed loop. Preferably, the continuous dam is planar or substantially planar and comprises a first compacted configuration for insertion and a second open configuration for retraction. The suction retractor of the invention finds application in single incision and conventional laparoscopic surgery.

No. of Pages : 61 No. of Claims : 32

(12) PATENT APPLICATION PUBLICATION
(19) INDIA
(22) Date of filing of Application :13/02/2013

(21) Application No.380/KOLNP/2013 A
(43) Publication Date : 05/07/2013

(54) Title of the invention : LUMINAIRE WITH DISTRIBUTED LED SOURCES

(51) International classification :F21V7/00
(31) Priority Document No :12/855,500
(32) Priority Date :12/08/2010
(33) Name of priority country :U.S.A.
(86) International Application No :PCT/US2011/001394
Filing Date :04/08/2011
(87) International Publication No :WO 2012/021159
(61) Patent of Addition to Application Number :NA
Filing Date :NA
(62) Divisional to Application Number :NA
Filing Date :NA

(71)**Name of Applicant :**
1)CREE ,INC.
Address of Applicant :4600 SILICON DRIVE, DURHAM, NC 27703 U.S.A.
(72)**Name of Inventor :**
1)TONG ,TAO

(57) Abstract :
A wide beam angle (diffuse) luminaire with an efficient multi-source radiative emitter array. Embodiments of the luminaire utilize one or more LEDs disposed around a perimeter of a protective casing. The LEDs are angled to emit into an internal cavity defined by the inner surface of the casing. The placement of the LEDs around the perimeter of the device reduces self blocking and facilitates heat transfer from the LEDs through the casing or another heat sink and into the ambient. Light impinges on the inner surface and is redirected as useful emission. A diffuse reflective coating may be deposited on the inner surface to mix the light before it is emitted.

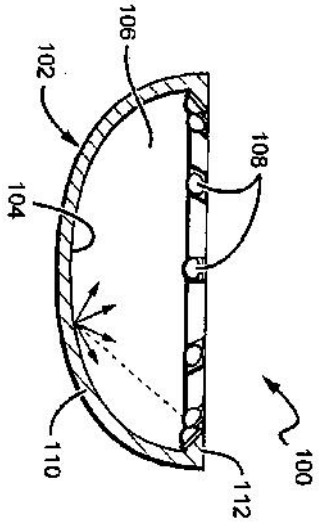

No. of Pages : 36 No. of Claims : 44

(12) PATENT APPLICATION PUBLICATION
(21) Application No.422/KOLNP/2013 A
(19) INDIA
(22) Date of filing of Application :19/02/2013
(43) Publication Date : 05/07/2013

(54) Title of the invention : HANDLING NETWORK TRAFFIC VIA A FIXED ACCESS

(51) International classification :H04L12/56,H04L12/24
(31) Priority Document No :NA
(32) Priority Date :NA
(33) Name of priority country :NA
(86) International Application No :PCT/EP2010/061071
Filing Date :29/07/2010
(87) International Publication No :WO 2012/013238
(61) Patent of Addition to Application Number :NA
Filing Date :NA
(62) Divisional to Application Number :NA
Filing Date :NA

(71)**Name of Applicant :**
1)TELEFONAKTIEBOLAGET LM ERICSSON (PUBL)
Address of Applicant :S-164 83 STOCKHOLM,Sweden
(72)**Name of Inventor :**
1)LUDWIG, REINER
2)EKSTRÖM, HANNES

(57) Abstract :
For efficiently handling network traffic via a fixed access, classification of UL data traffic in a communication device (100) may be accomplished in a reflective mode by detecting identifiers of outgoing uplink data packets which are complementary to identifiers of incoming downlink data packets. The downlink data packets are already assigned to the traffic classes (50). The outgoing uplink data packets carrying the complementary identifier are assigned to the same traffic class (50) as the incoming downlink data packets. For this purpose, the communication device (100) is provided with a traffic classificator (110). In the reflective mode, the traffic classificator (110) locally generates uplink packet classification rules (115) by monitoring received downlink data packets.

No. of Pages : 30 No. of Claims : 20

(12) PATENT APPLICATION PUBLICATION
(19) INDIA
(22) Date of filing of Application :29/01/2013
(21) Application No.252/KOLNP/2013 A
(43) Publication Date : 05/07/2013

(54) Title of the invention : FORCED-FLOW STEAM GENERATOR

(51) International classification :F22B21/34,F22B21/36,F22B29/02
(31) Priority Document No :10 2010 038 883.1
(32) Priority Date :04/08/2010
(33) Name of priority country :Germany
(86) International Application No :PCT/EP2011/059930
Filing Date :15/06/2011
(87) International Publication No :WO 2012/016749
(61) Patent of Addition to Application Number :NA
Filing Date :NA
(62) Divisional to Application Number :NA
Filing Date :NA

(71)**Name of Applicant :**
1)SIEMENS AKTIENGESELLSCHAFT
Address of Applicant :Wittelsbacherplatz 2, 80333 M¼nchen, Germany
(72)**Name of Inventor :**
1)BRODEBER Joachim
2)BRÜCKNER Jan
3)EFFERT Martin
4)FRANKE Joachim
5)SCHULZE Tobias

(57) Abstract :
A forced-flow steam generator (1) having a surrounding wall (4) formed from steam generator pipes (2) which are welded in a gas-tight fashion and traversable by flow in the vertical direction, in which within the surrounding wall (4) there is arranged a passage collector (14) by means of which the outlet side of a first multiplicity of steam generator pipes (2) in parallel configuration is connected at the flow medium side to the inlet side of a second multiplicity, in series configuration with and downstream of the first multiplicity, of steam generator pipes (2) in parallel configuration, should have a particularly long service life and particularly low susceptibility to faults, independently of the operating state. For this purpose, the steam generator pipes (16) arranged downstream of the passage collector (14) have in each case one restrictor device (18).

No. of Pages : 16 No. of Claims : 9

(12) PATENT APPLICATION PUBLICATION
(21) Application No.346/KOLNP/2013 A
(19) INDIA
(22) Date of filing of Application :08/02/2013
(43) Publication Date : 05/07/2013

(54) Title of the invention : PERIODIC CORRELATED MAGNETIC ACTUATOR SYSTEMS AND METHODS OF USE THEREOF

(51) International classification :H02K41/06
(31) Priority Document No :61/362,585
(32) Priority Date :08/07/2010
(33) Name of priority country :U.S.A.
(86) International Application No :PCT/US2011/043337
Filing Date :08/07/2011
(87) International Publication No :WO 2012/006511
(61) Patent of Addition to Application Number :NA
Filing Date :NA
(62) Divisional to Application Number :NA
Filing Date :NA

(71)**Name of Applicant :**
1)KONFIRST CONSULTING LLC
Address of Applicant :7942 Zionsville Road, Indianapolis, IN 46268 U.S.A.
(72)**Name of Inventor :**
1)NERL, Michael

(57) Abstract :
The present invention comprises correlated magnet actuators, devices incorporating said actuators, and methods of use thereof. The actuators utilize magnetic drives comprising a pair of complimentary correlated permanent magnet pairs, arranged in a separable and opposing fashion. The attractive or repulsive force of each correlated magnet pair drops significantly after only a few degrees of rotation off of a prime attractive or repulsive rotational alignment, allowing the magnets to be binarily manipulated between a correlated and decorrelated alignment. The linear motion resulting from the periodic coupling and decoupling of the magnetic pair can be translated to supporting conveyance structures to produce rotary (torque) output work. This output work can be harnessed to drive secondary utilization components such as a generator or a pump, or other devices dependent on rotary work output for their operation.

No. of Pages : 62 No. of Claims : 41

(12) PATENT APPLICATION PUBLICATION
(21) Application No.366/KOLNP/2013 A
(19) INDIA
(22) Date of filing of Application :12/02/2013
(43) Publication Date : 05/07/2013

(54) Title of the invention : DUAL- MODE ILLUMINATION FOR SURGICAL INSTRUMENT

(51) International classification :A61B17/32
(31) Priority Document No :61/373,575
(32) Priority Date :13/08/2010
(33) Name of priority country :U.S.A.
(86) International Application No :PCT/US2011/047262
Filing Date :10/08/2011
(87) International Publication No :WO 2012/021628
(61) Patent of Addition to Application Number :NA
Filing Date :NA
(62) Divisional to Application Number :NA
Filing Date :NA

(71)**Name of Applicant :**
1)ALCON RESEARCH, LTD.
Address of Applicant :IP LEGAL, MAIL CODE TB4-8, 6201 SOUTH FREEWAY, FORT WORTH, TEXAS 76134 U.S.A.
(72)**Name of Inventor :**
1)MCCOLLAM , CHRISTOPHER L.

(57) Abstract :
An illuminated surgical instrument is disclosed. One embodiment of the present invention comprises an illuminated vitrectomy probe. The vitrectomy probe has a cutting port disposed at a distal end of a cannula. An array of optical fibers terminates near the cutting port. The array of optical fibers is located adjacent to the cannula and encircling the cannula. The array of optical fibers can comprise two sets of fibers, one for providing illumination in a direction along a longitudinal axis of the vitrectomy probe and another for providing illumination in a direction at an angle to the longitiudinal direction of the vitrectomy probe. The light source providing light to each set of fibers can be independently controlled so as to provide illumination cooperatively or singly.

No. of Pages : 25 No. of Claims : 19

(12) PATENT APPLICATION PUBLICATION
(19) INDIA
(22) Date of filing of Application :19/02/2013
(21) Application No.427/KOLNP/2013 A
(43) Publication Date : 05/07/2013

(54) Title of the invention : METHOD FOR REDUNDANTLY CONTROLLING PROCESSES OF AN AUTOMATION SYSTEM

(51) International classification :G05B19/042,G05B9/03
(31) Priority Document No :10 2010 039 607.9
(32) Priority Date :20/08/2010
(33) Name of priority country :Germany
(86) International Application No :PCT/EP2011/063753
Filing Date :10/08/2011
(87) International Publication No :WO 2012/022661
(61) Patent of Addition to Application Number :NA
Filing Date :NA
(62) Divisional to Application Number :NA
Filing Date :NA

(71)**Name of Applicant :**
1)SIEMENS AKTIENGESELLSCHAFT
Address of Applicant :WITTELSBACHERPLATZ 2, 80333 MÜNCHEN Germany
(72)**Name of Inventor :**
1)EDUARD ERHARDT
2)WILHELM GRIESBAUM

(57) Abstract :
The invention relates to a method for redundantly controlling processes of an automation system comprising at least two controllers (CPU1,CPU2), in which each controller (CPU1,CPU2) consecutively carries out a number (n) of task blocks (t1,t2,tx, .., tn), wherein output data (E(t1), E(t2), E(tx), .., E(tn)) which can be transmitted for carrying out the task blocks is stored in a number of work regions (A1, A2, Ax, ... An+1, A1, A2, Ax, ... An+1´) exceeding the number of task blocks by one the work regions containing the respective output data for each of the task blocks, wherein the one additional work region (An+1,An+1) which is the system work region, contains the output data which can be currently transmitted. A very simple and secure method for synchronous data management and for controlling the redundant controllers is achieved by transferring the respective previously synchronized content from the system work region into the work region during the start of a task block in the redundant controllers, then updating said content while the task block is carried out and, if the updated content is identical in the redundant controllers, then returning said updated content to the system work region again before the next task block is started.

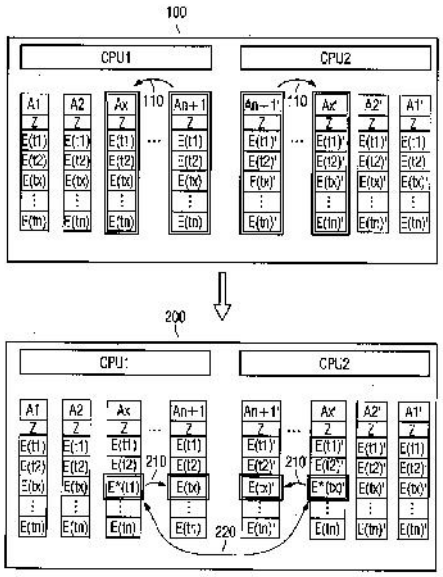

No. of Pages : 13 No. of Claims : 8

(12) PATENT APPLICATION PUBLICATION
(21) Application No.308/KOLNP/2013 A
(19) INDIA
(22) Date of filing of Application :05/02/2013
(43) Publication Date : 05/07/2013

(54) Title of the invention : BOX-SHAPED ELECTRICAL SWITCHGEAR CABINET SEALED WITH A COVER FOR A WIND TURBINE

(51) International classification :F03D11/00,H02B1/40,H02B1/46
(31) Priority Document No :10 2010 034 873.2
(32) Priority Date :19/08/2010
(33) Name of priority country :Germany
(86) International Application No :PCT/EP2011/003339
Filing Date :05/07/2011
(87) International Publication No :WO 2012/022394
(61) Patent of Addition to Application Number :NA
Filing Date :NA
(62) Divisional to Application Number :NA
Filing Date :NA

(71)**Name of Applicant :**
1)SSB WIND SYSTEMS GMBH &CO.KG
Address of Applicant :Neuenkirchener StraBe 13, 48499 Salzbergen, Germany
(72)**Name of Inventor :**
1)THIER, Mark-Andre

(57) Abstract :
The invention relates to a box-shaped electric control cabinet (2, 3, 17) which can be closed by a cover and which is used to receive electric components and devices for a blade angle adjustment drive (pitch drive) of a wind energy power plant, by means of which one or more rotor blades of the plant can be rotated about the blade axis and the control cabinet (2, 3, 17) is composed of at least two modules and/or control cabinet segments (4, 5), and specific electric components and devices are associated with respectively one module according to its function. The invention is characterised in that a segment and/or module (4, 5) can be associated with and/or assigned to respectively different electric components and devices, with which combined as a part function, different total functions and/or embodiment forms of the control cabinet (2) can be produced and/or are producable.

No. of Pages : 24 No. of Claims : 24

(12) PATENT APPLICATION PUBLICATION
(21) Application No.329/KOLNP/2013 A
(19) INDIA
(22) Date of filing of Application :07/02/2013
(43) Publication Date : 05/07/2013

(54) Title of the invention : ABRADING ARRANGEMENT TO ABRADE A SURFACE OF AN ITEM AND METHOD OF USE THEREOF

(51) International classification :B24B19/14,B24B19/26,B24B27/00
(31) Priority Document No :PA 2010 00613
(32) Priority Date :09/07/2010
(33) Name of priority country :Denmark
(86) International Application No :PCT/DK2011/000079
Filing Date :08/07/2011
(87) International Publication No :WO 2012/003828
(61) Patent of Addition to Application Number :NA
Filing Date :NA
(62) Divisional to Application Number :NA
Filing Date :NA

(71)**Name of Applicant :**
1)ELTRONIC A/S
Address of Applicant :Kilde Alle 4, DK-8722 Hedensted Denmark
(72)**Name of Inventor :**
1)ERIKSEN, Keld
2)LUNDUM, Poul

(57) Abstract :
An abrasion arrangement is disclosed to abrade a surface of an item, the arrangement comprising a multiple axis robotic arm having at least five axes, an abrading cylinder mounted on the robotic arm and comprising abrasive means which comprise abrasive lamellae of an abrasive sheet, such as abrasive cloth, of which the front side has abrasive properties and which extend substantially radially from an elongated core and means for driving said core to rotate around a longitudinal axis of the core, and control means for controlling the operation of the robotic arm so as to control e.g. the position of the abrading cylinder on said surface, the force with which the abrading cylinder is pressed towards said surface and the velocity with which the abrading cylinder is moved with respect to said surface.

No. of Pages : 24 No. of Claims : 17

(12) PATENT APPLICATION PUBLICATION
(19) INDIA
(22) Date of filing of Application :30/10/2012
(21) Application No.3290/KOLNP/2012 A
(43) Publication Date : 05/07/2013

(54) Title of the invention : HYDROGENOLYSIS OF ETHYL ACETATE IN ALCOHOL SEPARATION PROCESSES

(51) International classification :C07C29/149,C07C29/90,C07C67/08
(31) Priority Document No :61/363,056
(32) Priority Date :09/07/2010
(33) Name of priority country :U.S.A.
(86) International Application No :PCT/US2011/043213
Filing Date :07/07/2011
(87) International Publication No :WO 2012/006438
(61) Patent of Addition to Application Number :NA
Filing Date :NA
(62) Divisional to Application Number :NA
Filing Date :NA

(71)**Name of Applicant :**
1)CELANESE INTERNATIONAL CORPORATION
Address of Applicant :1601 West LBJ Freeway, Dallas, TX 75234-6034, U.S.A.
(72)**Name of Inventor :**
1)WARNER R. Jay
2)HALE Trinity
3)WOLLRAB Radmila
4)JOHNSTON Victor J.
5)LEE David
6)OROSCO Adam
7)SARAGER Lincoln

(57) Abstract :
Recovery of ethanol from a crude ethanol product obtained from the hydrogenation of acetic acid and by reacting a portion of the crude ethanol product or one or more derivative streams containing ethyl acetate obtained therefrom in the presence of hydrogen via hydrogenolysis. The one or more derivative streams comprise ethyl acetate that are reacted via hydrogenolysis to form additional ethanol that may be directly or indirectly fed to the separation zone or the hydrogenation reactor.

No. of Pages : 73 No. of Claims : 58

(12) PATENT APPLICATION PUBLICATION
(21) Application No.430/KOLNP/2013 A
(19) INDIA
(22) Date of filing of Application :19/02/2013
(43) Publication Date : 05/07/2013

(54) Title of the invention : CLAMPING DEVICE HAVING INDEPENDENTLY RESILIENT CLAMPING FINGERS FOR CLAMPING A CUTTING INSERT IN A TOOL HOLDER

(51) International classification :B23B27/16
(31) Priority Document No :208493
(32) Priority Date :05/10/2010
(33) Name of priority country :Israel
(86) International Application No :PCT/IL2011/000658
Filing Date :14/08/2011
(87) International Publication No :WO 2012/046224
(61) Patent of Addition to Application Number :NA
Filing Date :NA
(62) Divisional to Application Number :NA
Filing Date :NA

(71)**Name of Applicant :**
1)ISCAR LTD.
Address of Applicant :P.O. BOX 11, 24959 TEFEN ISRAEL
(72)**Name of Inventor :**
1)HECHT, GIL
2)CHEN, DANNY

(57) Abstract :
A clamping device (20) for removably securing a cutting insert (22) in a tool holder (24) used in turning and milling operations, where the clamping device (20) comprises a clamping lever (26) and an actuating member (32). The clamping lever (26) includes a first and second limb (34, 36) extending from a central elbow (38), the first limb (34) having a clamping end portion (46) with two independently resilient clamping fingers (64,66) separated by a clamping slot (68) and the second limb (36) being operatively connected to the actuating member (32). Each of the independently resilient clamping fingers (64,66) has a resilience axis of rotation (R1, R2) and an upper clamping zone (70,72) in clamping contact with the cutting insert (22), where the resilience axes of rotation (R1,R2) are generally parallel to the slot width (W1) of the clamping slot (68).

No. of Pages : 20 No. of Claims : 26

(12) PATENT APPLICATION PUBLICATION
(19) INDIA
(22) Date of filing of Application :06/11/2012
(21) Application No.3398/KOLNP/2012 A
(43) Publication Date : 05/07/2013

(54) Title of the invention : POLYPROPYLENE COMPOSITION SUITABLE FOR EXTRUSION COATING

(51) International classification :C08F210/06,C08F255/02,B32B27/32
(31) Priority Document No :10004990.7
(32) Priority Date :11/05/2010
(33) Name of priority country :EPO
(86) International Application No :PCT/EP2011/000255
Filing Date :21/01/2011
(87) International Publication No :WO 2011/141070
(61) Patent of Addition to Application Number :NA
Filing Date :NA
(62) Divisional to Application Number :NA
Filing Date :NA

(71)**Name of Applicant :**
1)BOREALIS AG
Address of Applicant :IZD Tower, Wagramerstrasse 17-19, A-1220 Wien Austria
(72)**Name of Inventor :**
1)KLIMKE, Katja
2)YLI-PELTOLA, Juha
3)PACHNER, Elke
4)MACHL, Doris
5)BRAUN, Hermann
6)FILIPE, Susana
7)TRAN, Anh, Tuan

(57) Abstract :
Polypropylene composition comprising a polypropylene base resin whereby the polypropylene base resin has a MFR (2.16 kg 230 °C ISO 1133) of 8 to 24 g/10min and a LAOS-NLF > 2.8 whereby LAOS-NLF = |G1 /G3 | where G1- first order Fourier Coefficient, G3 -third order Fourier Coefficient.

No. of Pages : 41 No. of Claims : 14

(12) PATENT APPLICATION PUBLICATION
(19) INDIA
(22) Date of filing of Application :13/02/2013
(21) Application No.378/KOLNP/2013 A
(43) Publication Date : 05/07/2013

(54) Title of the invention : THERMAL TREATMENT PROCESS FOR TOBACCO MATERIALS

(51) International classification	:A24B 3/18, A24D 3/00
(31) Priority Document No	:12/855,343
(32) Priority Date	:12/08/2010
(33) Name of priority country	:U.S.A.
(86) International Application No	:PCT/US2011/047385
Filing Date	:11/08/2011
(87) International Publication No	:WO 2012/021683
(61) Patent of Addition to Application Number	:NA
Filing Date	:NA
(62) Divisional to Application Number	:NA
Filing Date	:NA

(71)**Name of Applicant :**
1)R. J. REYNOLDS TOBACCO COMPANY
Address of Applicant :401 NORTH MAIN STREET, WINSTON-SALEM,NORTH CAROLINA 27101-3804 U.S.A.
(72)**Name of Inventor :**
1)CHEN, GONG
2)GERARDI, ANTHONY RICHARD
3)MUA , JOHN-PAUL
4)HOLTON, JR., DARRELL EUGENE
5)CANTRELL , DANIEL VERDIN
6)ST. CHARLES , FRANK KELLEY
7)MOLDOVEANU , SERBAN C.
8)BRINKLEY ,PAUL ANDREW

(57) Abstract :
A method of preparing a tobacco material for use in a smoking article is provided, including (i) mixing a tobacco material, water, and an additive selected from the group consisting of lysine, glycine, histidine, alanine, methionine, glutamic acid, aspartic acid, proline, phenylalanine, valine, arginine, di- and trivalent cations, asparaginase, saccharides, phenolic compounds, reducing agents, compounds having a free thiol group, oxidizing agents, oxidation catalysts, plant extracts, and combinations thereof; (ii) heating the mixture; and (iii) incorporating the heat-treated mixture into a smoking article as a smokable material. A smoking article in the form of a cigarette is also provided that includes a tobacco material pre-treated to inhibit reaction of asparagine to form acrylamide in mainstream smoke. Upon smoking, the smoking article is characterized by an acrylamide content of mainstream smoke that is reduced relative to an untreated control smoking article.

No. of Pages : 35 No. of Claims : 26

(12) PATENT APPLICATION PUBLICATION
(21) Application No.397/KOLNP/2013 A
(19) INDIA
(22) Date of filing of Application :15/02/2013
(43) Publication Date : 05/07/2013

(54) Title of the invention : THREE DIMENSIONAL OBJECT DETECTION DEVICE AND THREE-DIMENSIONAL OBJECT DETECTION METHOD

(51) International classification :G06T7/00,B60R1/00,G06T1/00
(31) Priority Document No :2010-183645
(32) Priority Date :19/08/2010
(33) Name of priority country :Japan
(86) International Application No :PCT/JP2011/067456
Filing Date :29/07/2011
(87) International Publication No :WO 2012/023412
(61) Patent of Addition to Application Number :NA
Filing Date :NA
(62) Divisional to Application Number :NA
Filing Date :NA

(71)**Name of Applicant :**
1)NISSAN MOTOR CO.,LTD.
Address of Applicant :2,TAKARA-CHO,KANAGAWA-KU YOKOHAMA-SHI,KANAGAWA 221-0023 Japan
(72)**Name of Inventor :**
1)CHIKAO TSUCHIYA
2)HIROYUKI FURUSHOU
3)SHINYA TANAKA
4)YASUHISA HAYAKAWA

(57) Abstract :
A three-dimensional object detection device (1) is provided with a camera (10) and a computer (20). The computer (20) subjects an image captured by the camera (10) to a viewpoint conversion process to create a birds-eye view image, calculates the brightness difference between two pixels close to each position of a plurality of positions along a virtual vertical line extending in the vertical direction in real space, and detects a three-dimensional object on the basis of the continuity of the calculated brightness difference at each position.

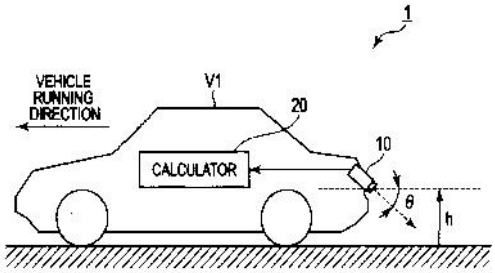

No. of Pages : 68 No. of Claims : 13

(12) PATENT APPLICATION PUBLICATION
(19) INDIA
(22) Date of filing of Application :19/02/2013

(21) Application No.418/KOLNP/2013 A
(43) Publication Date : 05/07/2013

(54) Title of the invention : POLYMER COMPOSITIONS, POLYMER FILMS, POLYMER GELS, POLYMER FOAMS, AND ELECTRONIC DEVICES CONTAINING SUCH FILMS ,GELS, AND FOAMS

(51) International classification :H01M10/0565,H01B1/12
(31) Priority Document No :61/401,856
(32) Priority Date :20/08/2010
(33) Name of priority country :U.S.A.
(86) International Application No :PCT/US2011/001468
Filing Date :19/08/2011
(87) International Publication No :WO 2012/023989
(61) Patent of Addition to Application Number :NA
Filing Date :NA
(62) Divisional to Application Number :NA
Filing Date :NA

(71)**Name of Applicant :**
1)RHODIA OPERATIONS
Address of Applicant :40 RUE DE LA HAIE COQ, F-93306 AUBERVILLIERS France
2)CENTRE NATIONAL DE LA RECHERCHE SCIENTIFIQUE
(72)**Name of Inventor :**
1)BADRE, CHANTAL
2)ALSAYED, AHMED
3)HOUGH, LAWRENCE

(57) Abstract :
A polymer film polymer gel, and polymer foam each contain an electrically conductive polymer and an ionic liquid and are each useful as a component of an electronic device.

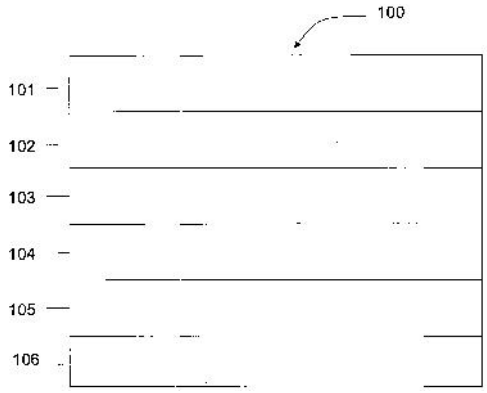

No. of Pages : 75 No. of Claims : 29

(12) PATENT APPLICATION PUBLICATION
(19) INDIA
(22) Date of filing of Application :21/02/2013
(21) Application No.440/KOLNP/2013 A
(43) Publication Date : 05/07/2013

(54) Title of the invention : SYSTEM FOR FASTENING A RAIL METHOD FOR RENOV ATING A RAIL FASTENING POINT

(51) International classification :E01B29/32,E01B31/20
(31) Priority Document No :NA
(32) Priority Date :NA
(33) Name of priority country :NA
(86) International Application No :PCT/EP2010/062335
Filing Date :24/08/2010
(87) International Publication No :WO 2012/025146
(61) Patent of Addition to Application Number :NA
Filing Date :NA
(62) Divisional to Application Number :NA
Filing Date :NA

(71)**Name of Applicant :**
1)VOSSLOH-WERKE GMBH
Address of Applicant :VOSSLOHSTRABE 4, 58791 WERDOHL Germany
(72)**Name of Inventor :**
1)WINFRIED BÖSTERLING
2)JORG HAPPE

(57) Abstract :
The invention relates to a base plate, which is designed to be laid, as part of a system for fastening a rail (S), on a support section (4) on which the rail (S) is supported in the finally installed state, to a system for fastening a rail (S) to a solid foundation, and to a method for renovating a rail-fastening point (1). The element according to the invention, the system, and the method allow a fastening point for a rail to be easily and economically renovated in such a way that a permanently reliable function of the renovated fastening is then ensured again while the worn support section remains. This is achieved in that the base plate (11) has at least two longitudinal edge sections (13,14), which are arranged at a distance from each other and which are bevelled in the direction of the lower face (15) of the base plate associated with the support section (4) or in the direction of the upper face of the base plate (11) associated with the rail foot (SF), and of which one longitudinal edge section (13,14) is associated with one of the longitudinal sides of the crosstie (2) so that one of the longitudinal edge sections (13,14) extends along a longitudinal side of the crosstie (2) when the base plate (11) is finally installed on the crosstie (2).

No. of Pages : 45 No. of Claims : 15

(12) PATENT APPLICATION PUBLICATION
(19) INDIA
(22) Date of filing of Application :06/02/2013
(21) Application No.323/KOLNP/2013 A
(43) Publication Date : 05/07/2013

(54) Title of the invention : METHODS AND PHARMACEUTICAL COMPOSITIONS FOR THE TREATMENT OF AN OCULAR DISEASE IN A SUBJECT

(51) International classification	:A61K41/00,A61K48/00,C12N15/87
(31) Priority Document No	:10305873.1
(32) Priority Date	:09/08/2010
(33) Name of priority country	:EPO
(86) International Application No	:PCT/EP2011/063631
Filing Date	:08/08/2011
(87) International Publication No	:WO 2012/020001
(61) Patent of Addition to Application Number	:NA
Filing Date	:NA
(62) Divisional to Application Number	:NA
Filing Date	:NA

(71)**Name of Applicant :**
1)INSERM (Institut National de la Sant et de la Recherche Mdicale)
Address of Applicant :101 rue de Tolbiac, F-75013 PARIS, France
(72)**Name of Inventor :**
1)BEHAR-COHEN, Francine

(57) Abstract :
The present invention relates to methods and pharmaceutical compositions for the treatment of an ocular disease in a subject. More particularly, the present invention relates to a method for treating an ocular disease in a subj ect comprising the steps consisting of i) delivering a pharmaceutical composition formulated with echo contrast agent microbubbles and a therapeutic nucleic acid of interest into the ciliary muscle of the subject and ii) exposing the region where the pharmaceutical composition was delivered to ultrasound to induce transfection of said therapeutic nucleic acid of interest into said ciliary muscle.

No. of Pages : 31 No. of Claims : 8

(12) PATENT APPLICATION PUBLICATION
(21) Application No.343/KOLNP/2013 A
(19) INDIA
(22) Date of filing of Application :08/02/2013
(43) Publication Date : 05/07/2013

(54) Title of the invention : DISPERSANT FOR CALCIUM CARBONATE, AND PROCESS FOR CONTINUOUS PRODUCTION OF THE DISPERSANT

(51) International classification :B01F17/52,C08F20/06,C08F2/44
(31) Priority Document No :2010-166441
(32) Priority Date :23/07/2010
(33) Name of priority country :Japan
(86) International Application No :PCT/JP2011/064729
Filing Date :28/06/2011
(87) International Publication No :WO 2012/011368
(61) Patent of Addition to Application Number :NA
Filing Date :NA
(62) Divisional to Application Number :NA
Filing Date :NA

(71)**Name of Applicant :**
1)TOAGOSEI CO., LTD.
Address of Applicant :1-14-1, Nishi-Shimbashi, Minato-ku, Tokyo 1058419 Japan
(72)**Name of Inventor :**
1)FUJIWARA Masahiro
2)SATO Takefumi
3)WAKAYAMA Toshiyuki

(57) Abstract :
The present invention relates to: a dispersant for calcium carbonate, which can produce a calcium carbonate slurry having a reduced initial viscosity by wet-grinding and can prevent the significant increase in viscosity of the slurry over time; and a process for continuously producing the dispersant. This dispersant for calcium carbonate is produced through a polymerization step and a neutralization step which are carried out sequentially, and is characterized in that the polymerization step comprises supplying a monomer comprising acrylic acid, an aqueous IPA solution, a hypophosphorous acid salt, a persulfuric acid salt and NaOH to a reactor continuously to polymerize the monomer continuously, and the IPA, the hypophosphorous acid salt, the persulfuric acid salt and sodium hydroxide are supplied in amounts of 15-100 parts by mass, 2.0-5.0 parts by mass, 0.5-2.0 parts by weight and 5.0-20 parts by mass, respectively, relative to 100 parts by mass of the monomer, the reaction temperature to be employed in the polymerization step is 68-82°C, and the degree of neutralization in the neutralization step is 15-95 mol%.

No. of Pages : 53 No. of Claims : 12

(12) PATENT APPLICATION PUBLICATION
(21) Application No.3998/KOLNP/2012 A
(19) INDIA
(22) Date of filing of Application :17/12/2012
(43) Publication Date : 05/07/2013

(54) Title of the invention : CONTINUOUS CASTING DEVICE AND RELATIVE METHOD

(51) International classification :B22D11/12,B22D11/128
(31) Priority Document No :UD2010A000095
(32) Priority Date :18/05/2010
(33) Name of priority country :Italy
(86) International Application No :PCT/EP2011/057926
Filing Date :17/05/2011
(87) International Publication No :WO 2011/144590
(61) Patent of Addition to Application Number :NA
Filing Date :NA
(62) Divisional to Application Number :NA
Filing Date :NA

(71)**Name of Applicant :**
1)DANIELI & C. OFFICINE MECCANICHE SPA
Address of Applicant :Via Nazionale, 41, I-33042 Buttrio (IT) Italy
(72)**Name of Inventor :**
1)BENEDETTI, Gianpietro
2)CARBONI, Andrea
3)BOBIG, Paolo

(57) Abstract :
A continuous casting device (10) comprises at least a crystallizer (11) suitable for casting a metal product (12) and a plurality of guide and containing segments with rolls (14) the function of which is to accompany the cast product (12) exiting from the crystallizer (11). The device (10) comprises in extension of or in an intermediate position to one or more of said guide and containing segments with rolls (14) one or more guide and containing segments (15) of the mixed type with panels and rolls each comprising one or more guide rolls (16) disposed on at least one side of the product (12) and insulated and/or reflecting and/or heated panels (17) disposed on the opposite side of the product (12) so as to reduce the loss of temperature of the cast product (12) in transit.

No. of Pages : 14 No. of Claims : 13

(12) PATENT APPLICATION PUBLICATION
(19) INDIA
(22) Date of filing of Application :21/02/2013
(21) Application No.441/KOLNP/2013 A
(43) Publication Date : 05/07/2013

(54) Title of the invention : AN INTEGRATED MEMBER AND ITS MANUFACTURING METHOD

(51) International classification :B23K11/00,B23K11/34,B23K11/36
(31) Priority Document No :2010-191018
(32) Priority Date :27/08/2010
(33) Name of priority country :Japan
(86) International Application No :PCT/JP2011/069312
Filing Date :26/08/2011
(87) International Publication No :WO 2012/026587
(61) Patent of Addition to Application Number :NA
Filing Date :NA
(62) Divisional to Application Number :NA
Filing Date :NA

(71)**Name of Applicant :**
1)KABUSHIKI KAISHA F.C.C.
Address of Applicant :7000-36,NAKAGAWA,HOSOE-CHO,KITA-KU,HAMAMATSU-SHI,SHIZUOKA,Japan
(72)**Name of Inventor :**
1)TOSHIKAZU HAMAMOTO
2)YASUYUKI DOI

(57) Abstract :
[Problem] To provide an integrated member and manufacturing method therefor that make it possible to: decrease manufacturing costs by reducing the number of manufacturing steps needed to obtain an integrated member comprising members that have mutually differing required characteristics and are welded together into a single unit; and increase yield by minimizing cracks and the like upon welding. [Solution] An integrated member and a manufacturing method therefor, said integrated member being obtained through the following steps: an electric resistance welding step (S2) in which a shaft component (3) is made from a member that has a higher carbon content than an annular component (2), and while the shaft component (3) is being pressed into the annular component (2), a current is run through the contact area thereby integrating the shaft component (3) and annular component (2) together via electric resistance welding; and a carburized-layer formation step (S4) in which carburized layers are formed on the shaft component (3) and annular component (2), in accordance with the characteristics required of each component, by either carburizing or carbonitriding the integrated member obtained in the electric resistance welding step (S2) and then quenching and tempering said integrated member.

No. of Pages : 23 No. of Claims : 6

(12) PATENT APPLICATION PUBLICATION
(21) Application No.250/KOLNP/2013 A
(19) INDIA
(22) Date of filing of Application :29/01/2013
(43) Publication Date : 05/07/2013

(54) Title of the invention : RADIO COMMUNICATION SYSTEM, BASE STATION, REALY STATION, AND RADIO COMMUNICATION METHOD

(51) International classification :H04W
(31) Priority Document No :NA
(32) Priority Date :NA
(33) Name of priority country :NA
(86) International Application No :PCT/JP2010/063748
Filing Date :13/08/2011
(87) International Publication No :WO 2012/020503
(61) Patent of Addition to Application Number :NA
Filing Date :NA
(62) Divisional to Application Number :NA
Filing Date :NA

(71)**Name of Applicant :**
1)FUJITSU LIMITED
Address of Applicant :1-1,KAMIKODANAKA 4-CHOME, NAKAHARA-KU,KAWASAKI-SHI, KANAGAWA 211-8588, JAPAN.
(72)**Name of Inventor :**
1)YOSHIAKI OHTA
2)YOSHIHIRO KAWASAKI
3)KAZUHISA OBUCHI
4)YOSHIHARU TAJIMA
5)YOSHINORI TANAKA

(57) Abstract :
Random access through a relay station is smoothly performed. The relay station (20) performs wireless communications with a base station (10) , and a mobile station (30) performs wireless communications with the base station (10) or relay station (20). The relay station (20) limits reception of a radio signal from the base station (10) at timing at which a radio signal is transmitted to the mobile station (30). The relay station (20) transmits a message #1 about random access to the base station (10) . The base station (10) transmits a message #2 at timing which is determined based on whether a transmission source of the message #1 is the relay station (20) . The relay station (20) receives the message #2 from the base station (10) .

No. of Pages : 105 No. of Claims : 13

(12) PATENT APPLICATION PUBLICATION
(21) Application No.287/KOLNP/2013 A
(19) INDIA
(22) Date of filing of Application :01/02/2013
(43) Publication Date : 05/07/2013

(54) Title of the invention : METHOD FOR OPERATING A SOLAR-HEATED CONTINUOUS-FLOW STEAM GENERATOR, AND SOLAR-THERMAL CONTINUOUS-FLOW STEAM GENERATOR

(51) International classification :F22B1/00,F01K13/02,F22B35/10
(31) Priority Document No :102010040210.9
(32) Priority Date :03/09/2010
(33) Name of priority country :Germany
(86) International Application No :PCT/EP2011/064466
Filing Date :23/08/2011
(87) International Publication No :WO 2012/028495
(61) Patent of Addition to Application Number :NA
Filing Date :NA
(62) Divisional to Application Number :NA
Filing Date :NA

(71)**Name of Applicant :**
1)SIEMENS AKTIENGESELLSCHAFT
Address of Applicant :Wittelsbacherplatz 2, 80333 M¼nchen, Germany
(72)**Name of Inventor :**
1)BRÜCKNER Jan
2)EFFERT Martin
3)FRANKE Joachim
4)THOMAS Frank

(57) Abstract :
The invention relates to a method for operating a solar heated continuous flow steam generator comprising an evaporator heating surface (4) whereby a target value (formula (II)) for the supply water mass flow (I) is fed to a device for adjusting the supply water mass flow (formula (I)). In order to further improve the quality of a predictive supply water or mass flow control and to maintain the enthalpy of the flow medium at the evaporator outlet particularly stable especially when load changes occur, a correction factor (K) is taken into consideration during production of the target value (II) for the supply water mass flow (I) said correction faction being characteristic of the temporal derivative of enthalpy the temperature or the density of the flow medium at the inlet of one or more heating surfaces (2 4). Said method is particularly suitable for operating a solar thermal continuous flow steam generator (1) in a solar tower power station (129) with direct evaporation.

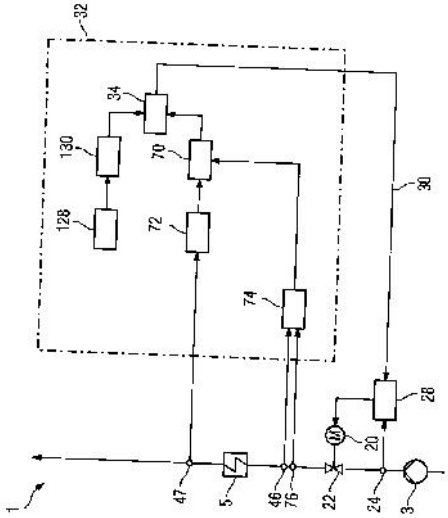

No. of Pages : 33 No. of Claims : 13

(12) PATENT APPLICATION PUBLICATION
(19) INDIA
(22) Date of filing of Application :07/02/2013

(21) Application No.326/KOLNP/2013 A
(43) Publication Date : 05/07/2013

(54) Title of the invention : PLATE LOCKING MECHANISM

(51) International classification	:B24B7/00,B24B23/02,B24B7/18	(71)**Name of Applicant :**
(31) Priority Document No	:00	**1)KELLY, Myles Graham**
(32) Priority Date	:29/07/2010	Address of Applicant :74 Burbury Road, Morayfield, Queensland 4506, Australia
(33) Name of priority country	:	(72)**Name of Inventor :**
(86) International Application No	:PCT/AU2010/000962	**1)KELLY, Myles Graham**
Filing Date	:29/07/2010	
(87) International Publication No	:WO 2012/012820	
(61) Patent of Addition to Application Number	:NA	
Filing Date	:NA	
(62) Divisional to Application Number	:NA	
Filing Date	:NA	

(57) Abstract :
A plate locking mechanism for a surface preparation device comprising a connecting plate having a receiving aperture, a base plate and a floating plate capable of being substantially aligned with the base plate. A fastener extends through a floating plate aperture and engages with a base plate aperture and a resilient member is operatively associated with the fastener to maintain the floating plate in contact with the base plate and wherein, when the base plate is located within the receiving aperture, the floating plate is rotatable to retain the connecting plate in position.

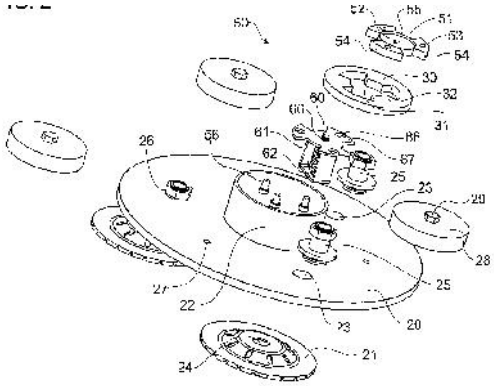

No. of Pages : 35 No. of Claims : 38

(12) PATENT APPLICATION PUBLICATION
(19) INDIA
(22) Date of filing of Application :08/02/2013

(21) Application No.347/KOLNP/2013 A
(43) Publication Date : 05/07/2013

(54) Title of the invention : CATALYST COMPOSITIONS AND APPLICATIONS THEREOF

(51) International classification :B01J35/00,B01D46/24,F01N3/28
(31) Priority Document No :61/371,971
(32) Priority Date :09/08/2010
(33) Name of priority country :U.S.A.
(86) International Application No :PCT/US2011/047146
Filing Date :09/08/2011
(87) International Publication No :WO 2012/021556
(61) Patent of Addition to Application Number :NA
Filing Date :NA
(62) Divisional to Application Number :NA
Filing Date :NA

(71)**Name of Applicant :**
1)CORMETECH, INC.
Address of Applicant :5000 International Drive, Durham, NC 27712 U.S.A.
(72)**Name of Inventor :**
1)TREFZGER, Christian
2)DIFRANCESCO, Chris, E.
3)OH, Raymond

(57) Abstract :
In one aspect, structural catalyst bodies comprising one or more gradients of catalytic material are provided herein. In some embodiments, a structural catalyst body described herein comprises an inner partition wall having a first surface and a second surface opposite the first surface, the inner partition wall having a gradient of catalytic material along the width of the inner partition wall.

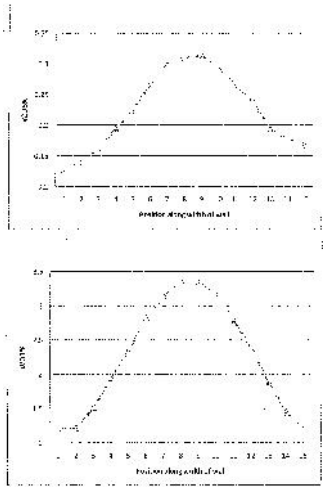

No. of Pages : 75 No. of Claims : 69

(12) PATENT APPLICATION PUBLICATION
(21) Application No.444/KOLNP/2013 A
(19) INDIA
(22) Date of filing of Application :21/02/2013
(43) Publication Date : 05/07/2013

(54) Title of the invention : RADIO REMOTE CONTROL SYSTEM COMPRISING ATTITUDE SENSORS

(51) International classification :G08C17/02
(31) Priority Document No :NA
(32) Priority Date :NA
(33) Name of priority country :NA
(86) International Application No :PCT/EP2010/062706
Filing Date :31/08/2010
(87) International Publication No :WO 2012/028175
(61) Patent of Addition to Application Number :NA
Filing Date :NA
(62) Divisional to Application Number :NA
Filing Date :NA

(71)**Name of Applicant :**
1)BRENDEL,WOLFGANG
Address of Applicant :IN DEN KERZENWIESEN 9, 74564 CRAILSHEIM,Germany
(72)**Name of Inventor :**
1)BRENDEL, WOLFGANG

(57) Abstract :
The present invention relates to a radio remote control for a machine with at least one machine drive, which can be actuated by the radio remote control, for a movable machine part, comprising a handheld device (10) with a control unit, a transmitting device and at least one movement sensor, wherein the control unit is configured to transmit control commands brought about by a user to a transmitting device, and to cause the transmitting device to transmit the control commands to the machine, in particular an associated receiving device, and wherein movements of the handheld device (10) in the space around at least one tilting axis or inclination axis (KA,DA) can be sensed by means of the movement sensor, such that in a movement operating mode the sensed movements can be converted by the control unit into control commands which can be transmitted to the machine, wherein the movement operating mode can be activated after a user side input at the handheld device (10). According to the invention it is proposed that the control unit is also configured in such a way that when the movement operating mode is activated, the current position (I) of the handheld device (10) in space is sensed as the current reference position (I), with the result that movements relative to this current reference position (I) can be sensed by the movement sensor and can be transmitted by the control unit as control commands to the machine. In addition, the invention relates to an operating method for a radio remote control according to the invention.

No. of Pages : 26 No. of Claims : 17

(12) PATENT APPLICATION PUBLICATION
(19) INDIA
(22) Date of filing of Application :01/02/2013
(21) Application No.292/KOLNP/2013 A
(43) Publication Date : 05/07/2013

(54) Title of the invention : CENTRALISER

(51) International classification :E21B19/24,E21B7/04
(31) Priority Document No :2010903662
(32) Priority Date :16/08/2010
(33) Name of priority country :Australia
(86) International Application No :PCT/AU2011/001046
Filing Date :16/08/2011
(87) International Publication No :WO 2012/021927
(61) Patent of Addition to Application Number :NA
Filing Date :NA
(62) Divisional to Application Number :NA
Filing Date :NA

(71)**Name of Applicant :**
1)TEEK MINING SOLUTIONS PTY LTD
Address of Applicant :6 East Addis Street, Kalgoorlie WA 6430, Australia
(72)**Name of Inventor :**
1)ROWLING, Peter, Sidney

(57) Abstract :
A centraliser for use in a rock drill rig is disclosed. The centraliser includes a clamping member which moves generally tangentially to a bush, in order to clamp the bush in place within the centraliser.

No. of Pages : 15 No. of Claims : 10

(12) PATENT APPLICATION PUBLICATION
(21) Application No.309/KOLNP/2013 A
(19) INDIA
(22) Date of filing of Application :05/02/2013
(43) Publication Date : 05/07/2013

(54) Title of the invention : VARIABLE-PITCH PROPELLER OR REPELLER

(51) International classification :B63H3/06,F03D7/04
(31) Priority Document No :102010039394.0
(32) Priority Date :17/08/2010
(33) Name of priority country :Germany
(86) International Application No :PCT/EP2011/057607
Filing Date :11/05/2011
(87) International Publication No :WO 2012/022501
(61) Patent of Addition to Application Number :NA
Filing Date :NA
(62) Divisional to Application Number :NA
Filing Date :NA

(71)**Name of Applicant :**
1)SIEMENS AKTIENGESELLSCHAFT
Address of Applicant :Wittelsbacherplatz 2, 80333 München Germany
(72)**Name of Inventor :**
1)KRACKHARDT Ernst-Christoph
2)MÜLLER Christian Norbert
3)SCHRÖDER Dierk

(57) Abstract :
In the case of a variable-pitch propeller (7) or repeller (53) according to the invention, the pitch adjusting device (10) is arranged in the hub (9) and formed in such a way that it allows only a numerically limited number of different blade pitches, preferably just two blade pitches, for which purpose the pitch adjusting device (10) comprises an electrical drive device (20), for moving the blades (11) from a first blade pitch to a second of the numerically limited number of blade pitches, and an electrically actuable locking device (40) for locking the blades (11) in the numerically limited number of different blade pitches.

No. of Pages : 24 No. of Claims : 15

(12) PATENT APPLICATION PUBLICATION
(21) Application No.328/KOLNP/2013 A
(19) INDIA
(22) Date of filing of Application :07/02/2013
(43) Publication Date : 05/07/2013

(54) Title of the invention : CONVERTER CIRCUIT

(51) International classification :H02M3/335,H02M3/28
(31) Priority Document No :2010-207257
(32) Priority Date :15/09/2010
(33) Name of priority country :Japan
(86) International Application No :PCT/IB2011/002101
Filing Date :09/09/2011
(87) International Publication No :WO 2012/035396
(61) Patent of Addition to Application Number :NA
Filing Date :NA
(62) Divisional to Application Number :NA
Filing Date :NA

(71)**Name of Applicant :**
1)PANASONIC CORPORATION
Address of Applicant :1006, Oaza Kadoma, Kadoma-shi, Osaka 571-8501, Japan
(72)**Name of Inventor :**
1)MURAYAMA Kei
2)INAKAGATA Satoru

(57) Abstract :
Provided is a converter circuit equipped with: a transformer having a plurality of first windings and at least one second winding; a rectifier circuit connected to the second winding; and a plurality of oscillating circuits connected to the plurality of first windings. The oscillating circuits are each formed from a bidirectional switch element having no body diode.

No. of Pages : 43 No. of Claims : 9

(12) PATENT APPLICATION PUBLICATION
(21) Application No.386/KOLNP/2013 A
(19) INDIA
(22) Date of filing of Application :14/02/2013
(43) Publication Date : 05/07/2013

(54) Title of the invention : ANTIDOTE TO THE BITE OF VENOMOUS SNAKES

(51) International classification :A61K35/58,A61P39/02
(31) Priority Document No :MI2010A001348
(32) Priority Date :22/07/2010
(33) Name of priority country :Italy
(86) International Application No :PCT/IB2011/053256
Filing Date :21/07/2011
(87) International Publication No :WO 2012/011071
(61) Patent of Addition to Application Number :NA
Filing Date :NA
(62) Divisional to Application Number :NA
Filing Date :NA

(71)**Name of Applicant :**
1)SATANASSI ,DAVID
Address of Applicant :LOCALITÀ GOIBA 1, I-47025 MERCATO SARACENO (FORLI CESENA) Italy
(72)**Name of Inventor :**
1)SATANASSI, DAVID

(57) Abstract :
The present invention concerns a composition comprising a low dosage of at least one venom derived from a venomous snake, characterised in that said composition is diluted in an aqueous medium according to the Sequential Kinetic Activation method. In addition, the present invention concerns the use of said composition as an antidote against the poisoning caused by the bite of a venomous snake.

No. of Pages : 20 No. of Claims : 11

(12) PATENT APPLICATION PUBLICATION
(21) Application No.429/KOLNP/2013 A
(19) INDIA
(22) Date of filing of Application :19/02/2013
(43) Publication Date : 05/07/2013

(54) Title of the invention : APPARATUS FOR DECODING A SIGNAL COMPRISING TRANSIENTS USING A COMBINING UNIT AND A MIXER

(51) International classification :G10L19/00
(31) Priority Document No :61/376,980
(32) Priority Date :25/08/2010
(33) Name of priority country :U.S.A.
(86) International Application No :PCT/EP2011/061360
Filing Date :06/07/2011
(87) International Publication No :WO 2012/025282
(61) Patent of Addition to Application Number :NA
Filing Date :NA
(62) Divisional to Application Number :NA
Filing Date :NA

(71)**Name of Applicant :**
1)FRAUNHOFER-GESELLSCHAFT ZUR FÖRDERUNG DER ANGEWANDTEN FORSCHUNG E.V.
Address of Applicant :HANSASTRABE 27C, 80686 MÜNCHEN Germany
(72)**Name of Inventor :**
1)KUNTZ , ACHIM
2)DISCH , SASCHA
3)HERRE , JURGEN
4)KÜCH, FABIAN
5)HILPERT , JOHANNES

(57) Abstract :
An apparatus for generating a decorrelated signal comprising a transient separator (310; 410; 510; 610; 710; 910), a transient decorrelator (320; 420; 520; 620; 720; 920), a second decorrelator (330; 430; 530; 630; 730; 930), a combining unit (340; 440; 540; 640; 740; 940) and a mixer (450; 552; 752; 952), wherein the transient separator (310; 410; 510; 610; 710; 910 is adapted to separate an input signal into a first signal component and into a second signal component such that the first signal component comprises transient signal portions of the input signal and such that the second signal component comprises non-transient signal portions of the input signal. The combining unit (340; 440; 540; 640; 740; 940) and the mixer (450; 552; 752; 952) are arranged so that a decorrelated signal from a combination unit is fed into the mixer (450; 552; 752; 952) as an input signal.

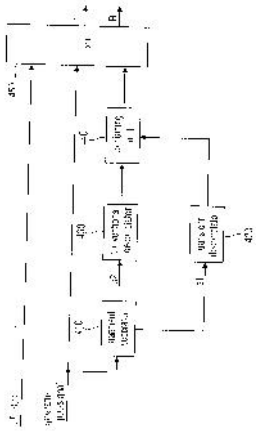

No. of Pages : 47 No. of Claims : 14

(12) PATENT APPLICATION PUBLICATION
(19) INDIA
(22) Date of filing of Application :27/02/2013

(21) Application No.525/KOLNP/2013 A
(43) Publication Date : 05/07/2013

(54) Title of the invention : EXHAUST TREATMENT SYSTEM AND METHOD OF ASSEMBLY

(51) International classification	:F01N3/24,B01J23/38,B01J35/02	(71)**Name of Applicant :**
(31) Priority Document No	:61/379,538	**1)GM GLOBAL TECHNOLOGY OPERATIONS LLC**
(32) Priority Date	:02/09/2010	Address of Applicant :300 RENAISSANCE CENTER, DETROIT,MICHIGAN 48265-3000 U.S.A.
(33) Name of priority country	:U.S.A.	(72)**Name of Inventor :**
(86) International Application No	:PCT/US2011/050328	**1)RICHARD LORENZE JOHNSON**
Filing Date	:02/09/2011	
(87) International Publication No	:WO 2012/039913	
(61) Patent of Addition to Application Number	:NA	
Filing Date	:NA	
(62) Divisional to Application Number	:NA	
Filing Date	:NA	

(57) Abstract :
An exhaust treatment system for an internal combustion engine comprises an insulating and cushioning mat material disposed in the exhaust treatment system and a film laminate sleeve vacuum packed and sealing the insulating and cushioning mat material therein.

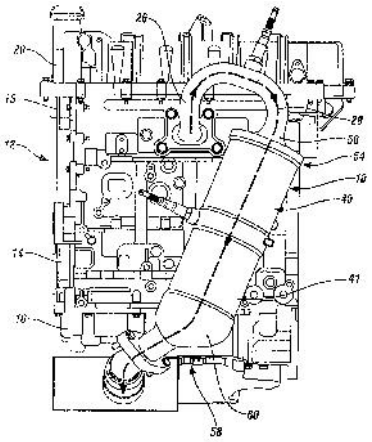

No. of Pages : 15 No. of Claims : 19

(12) PATENT APPLICATION PUBLICATION
(19) INDIA
(22) Date of filing of Application :13/02/2013
(21) Application No.381/KOLNP/2013 A
(43) Publication Date : 05/07/2013

(54) Title of the invention : INTEGRATED CLUTCH SUPERCHARGER

(51) International classification :F16D27/112,F02B39/12
(31) Priority Document No :12/856,121
(32) Priority Date :13/08/2010
(33) Name of priority country :U.S.A.
(86) International Application No :PCT/IB2011/001852
Filing Date :12/08/2011
(87) International Publication No :WO 2012/020304
(61) Patent of Addition to Application Number :NA
Filing Date :NA
(62) Divisional to Application Number :NA
Filing Date :NA

(71)**Name of Applicant :**
1)EATON CORPORATION
Address of Applicant :EATON CENTER, 1111 SUPERIOR AVENUE, CLEVELAND, OH 44114-2584 U.S.A.
(72)**Name of Inventor :**
1)OUWENGA, DANIEL, ROBERT

(57) Abstract :
A clutch assembly (10) configured for use with a supercharger (12) comprises a first shaft (18) having a longitudinal axis (36); a pulley (24) connected to the first shaft (18); a clutch rotor (26) connected to the first shaft (18); a clutch armature (28) unconnected to the first shaft (18); and a clutch coil (30) spaced along the longitudinal axis (36) from the pulley (24). The clutch rotor (26) rotates around the longitudinal axis (36). The clutch armature (28) also rotates around the longitudinal axis (36). The diameter of the pulley (24) is independent of the diameters of the clutch rotor (26), the clutch armature (28), and the clutch coil (30). A supercharger (12) including the clutch assembly (10) is also provided.

No. of Pages : 17 No. of Claims : 18

(12) PATENT APPLICATION PUBLICATION
(19) INDIA
(22) Date of filing of Application :19/02/2013
(21) Application No.424/KOLNP/2013 A
(43) Publication Date : 05/07/2013

(54) Title of the invention : DECODING TECHNIQUE FOR TAIL-BITING CODES

(51) International classification :H03M13/39,H03M13/41
(31) Priority Document No :NA
(32) Priority Date :NA
(33) Name of priority country :NA
(86) International Application No :PCT/EP2010/004682
Filing Date :30/07/2010
(87) International Publication No :WO 2012/013211
(61) Patent of Addition to Application Number :NA
Filing Date :NA
(62) Divisional to Application Number :NA
Filing Date :NA

(71)**Name of Applicant :**
1)TELEFONAKTIEBOLAGET LM ERICSSON (PUBL)
Address of Applicant :S-164 83 STOCKHOLM,Sweden
(72)**Name of Inventor :**
1)MUELLER -WEINFURTNER, STEFAN
2)KAMUF,MATTHIAS

(57) Abstract :
A technique for decoding a signal in a communication network is provided. A method implementation of the technique comprises the steps of receiving a signal; identifying a position in the signal; initializing a Viterbi state metric; and decoding the encoded signal by means of a wrap-around Viterbi algorithm. The received signal comprises information, wherein the signal is encoded by a tail-biting convolutional code. The identified position relates to a known portion of the information. The initialized Viterbi state metric is consistent with the known portion of the information. The decoding uses the initial Viterbi state metric, wherein the decoding starts at a decoding step following the identified position.

No. of Pages : 29 No. of Claims : 13

(12) PATENT APPLICATION PUBLICATION
(19) INDIA
(22) Date of filing of Application :27/02/2013
(21) Application No.531/KOLNP/2013 A
(43) Publication Date : 05/07/2013

(54) Title of the invention : PROCESS FOR MANUFACTURING A SEGMENTED OPTICAL STRUCTURE

(51) International classification :B29D11/00,G02B3/08
(31) Priority Document No :1057327
(32) Priority Date :14/09/2010
(33) Name of priority country :France
(86) International Application No :PCT/IB2011/053955
Filing Date :09/09/2011
(87) International Publication No :WO 2012/035477
(61) Patent of Addition to Application Number :NA
Filing Date :NA
(62) Divisional to Application Number :NA
Filing Date :NA

(71)**Name of Applicant :**
1)COMMISSARIAT A L'ENERGIE ATOMIQUE ET AUX ENERGIES ALTERNATIVES
Address of Applicant :25 RUE LEBLANC, B,TIMENT LE PONANT D, F-75015 PARIS France
(72)**Name of Inventor :**
1)DELLEA, OLIVIER
2)FUGIER, PASCAL

(57) Abstract :
The present invention relates to a process for manufacturing a segmented optical structure (100), comprising at least the steps consisting in: a) providing a substrate (1) having microwalls (2) on one of the faces (3) of said substrate, which microwalls form, when the substrate (1) is observed along an axis (X) perpendicular to said face a plurality of concentric recesses (5); b) depositing at least one material (10; 10a; 10b; 10c) in at least one recess (5); c) bringing at least one part of the upper surface (11) of the material (10; 10a; 10b; 10c) deposited in step b) into contact with at least one liquid medium (30) which is capable of dissolving said material (10; 10a; 10b; 10c) and is substantially inert with respect to the microwalls (2) and to the substrate (1); and d) imposing a centrifugal force on the liquid medium (30) deposited in step c) so as to modify the distribution thereof on the upper surface (11) of the material (10; 10a; 10b; 10c) deposited during step b) the amount of liquid medium (30) used during step c) enabling the material deposited during step b) to be partially dissolved.

No. of Pages : 26 No. of Claims : 18

(12) PATENT APPLICATION PUBLICATION
(19) INDIA
(22) Date of filing of Application :27/02/2013
(21) Application No.532/KOLNP/2013 A
(43) Publication Date : 05/07/2013

(54) Title of the invention : WEAR CRUTCHES FOR LINKING MEMBERS

(51) International classification :F16G13/12,B21L9/08,F16G15/12
(31) Priority Document No :2010214684
(32) Priority Date :27/08/2010
(33) Name of priority country :Australia
(86) International Application No :PCT/AU2011/001111
Filing Date :26/08/2011
(87) International Publication No :WO 2012/024743
(61) Patent of Addition to Application Number :NA
Filing Date :NA
(62) Divisional to Application Number :NA
Filing Date :NA

(71)**Name of Applicant :**
1)DAVID SCOTT HOLDINGS PTY LTD
Address of Applicant :11 HARRIS STREET, EMERALD,QUEENSLAND 4720 Australia
2)OGDEN, GLEN JOHN
(72)**Name of Inventor :**
1)OGDEN,GLEN JOHN
2)AGNEW,GREGORY JAMES

(57) Abstract :
A link member with wear crutch, the linking member including a pair of side arms and at least one integrally formed loop end portion, the inner surfaces of the side arms and loop end portion defining a friction surface, the inner surfaces of the respective side arms diverging from one another away from the loop end portion and the wear crutch including two curved surfaces arranged as an outer and an inner surface, the outer surface lo abut a surface of the linking member in a loop end portion and the inner surface presenting a wear surface for the linking member, and whereby the outer and inner surfaces intersect one another at opposite ends of the wear crutch along common edge portions, and a pair of substantially parallel locating arms adapted to abut respective surfaces of the linking member such that said common edge portions each engage an adjacent arm in a substantially flush manner when the wear crutch is seated on the linking member.

No. of Pages : 60 No. of Claims : 17

(12) PATENT APPLICATION PUBLICATION
(19) INDIA
(22) Date of filing of Application :21/02/2013

(21) Application No.446/KOLNP/2013 A
(43) Publication Date : 05/07/2013

(54) Title of the invention : CONCEALMENT OF INTERMITTENT MONO RECEPTION OF FM STEREO RADIO RECEIVERS

(51) International classification :G10L19/00,H04H40/81,H04B1/16
(31) Priority Document No :61/376,569
(32) Priority Date :24/08/2010
(33) Name of priority country :U.S.A.
(86) International Application No :PCT/EP2011/064084
Filing Date :16/08/2011
(87) International Publication No :WO 2012/025431
(61) Patent of Addition to Application Number :NA
Filing Date :NA
(62) Divisional to Application Number :NA
Filing Date :NA

(71)**Name of Applicant :**
1)DOLBY INTERNATIONAL AB
Address of Applicant :APOLLO BUILDING 3E, HERIKERBERGWEG 1-35, NL-1101 CN AMSTERDAM ZUIDOOST THE NETHERLANDS
(72)**Name of Inventor :**
1)SEHLSTROM, LEIF
2)PURNHAGEN, HEIKO
3)ENGDEGARD, JONAS

(57) Abstract :
The present invention relates to audio signal processing. In particular, it relates to a method and system for reliably concealing intermittent mono reception of FM stereo radio receivers. The system comprises a parametric stereo parameter estimation stage configured to determine a first parametric stereo parameter based on a first frame of the received two- channel audio signal. The system further comprises a concealment detection stage configured to determine an energy of a side signal within the first signal frame; determine a number of following successive signal frames during which the energy of the side signal drops from a value above the high threshold to a value below a low threshold; determine that the two- channel audio signal following the first signal frame is a forced mono signal if the number of successive signal frames is below a frame threshold; and determine the parametric stereo parameter based on the first parametric stereo parameter.

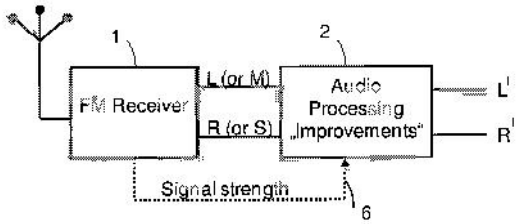

No. of Pages : 45 No. of Claims : 27

(12) PATENT APPLICATION PUBLICATION
(21) Application No.472/KOLNP/2013 A
(19) INDIA
(22) Date of filing of Application :25/02/2013
(43) Publication Date : 05/07/2013

(54) Title of the invention : APPARATUS FOR MANUFACTURING A SMOKELESS TOBACCO PRODUCT INCORPORATING AN OBJECT, AND ASSOCIATED METHOD

(51) International classification :A24B13/00,B65B9/207
(31) Priority Document No :12/874,420
(32) Priority Date :02/09/2010
(33) Name of priority country :U.S.A.
(86) International Application No :PCT/US2011/049948
Filing Date :31/08/2011
(87) International Publication No :WO 2012/030946
(61) Patent of Addition to Application Number :NA
Filing Date :NA
(62) Divisional to Application Number :NA
Filing Date :NA

(71)**Name of Applicant :**
1)R. J. REYNOLDS TOBACCO COMPANY
Address of Applicant :401 NORTH MAIN STREET, WINSTON-SALEM, NORTH CAROLINA 27101-3804, U.S.A.
(72)**Name of Inventor :**
1)NOVAK, III, CHARLES J.
2)BOVENDER, DAVID CHARLES

(57) Abstract :
An apparatus (1) and associated method are provided for manufacturing a smokeless tobacco product including tobacco material and at least one object. A forming unit (50) is configured to form a continuous supply of a pouch material (20) into a continuous tubular member (25) defining a longitudinal axis. A tobacco insertion unit (300) is configured to introduce tobacco material into a pouch member portion (116) of the tubular member (25). An object insertion unit (500) is configured to introduce objects into the tubular member (25), with at least one of the objects being introduced into the pouch member portion (116). A closing and dividing unit (600) is configured to close and divide the tubular member (25) at intervals along the longitudinal axis thereof, to form the tubular member into a plurality of discrete pouch member portions (116) such that each discrete pouch member portion (116) includes the tobacco material and the at least one of the objects.

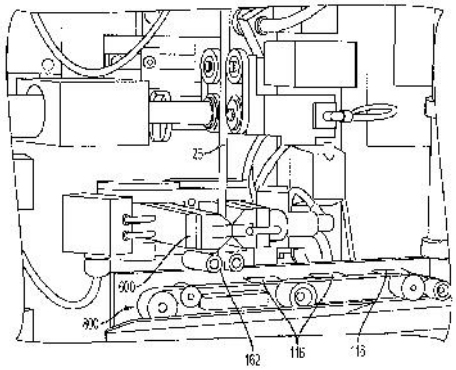

No. of Pages : 50 No. of Claims : 20

(12) PATENT APPLICATION PUBLICATION
(21) Application No.5/KOL/2012 A
(19) INDIA
(22) Date of filing of Application :02/01/2012
(43) Publication Date : 05/07/2013

(54) Title of the invention : SKIN CARE COMPOSITION COMPRISING ACANTHOPHORA SPICIFERA EXTRACT

(51) International classification :A61K36/254
(31) Priority Document No :NA
(32) Priority Date :NA
(33) Name of priority country :NA
(86) International Application No :NA
Filing Date :NA
(87) International Publication No : NA
(61) Patent of Addition to Application Number :NA
Filing Date :NA
(62) Divisional to Application Number :NA
Filing Date :NA

(71)**Name of Applicant :**
1)ITC LIMITED
Address of Applicant :37 J.L.Nehru Road Kolkata 700 071 State of West Bengal India West Bengal India
(72)**Name of Inventor :**
1)PANAYANGHATT Diana Sunny;
2)BHASKAR James Prabhanand;
3)RAAJENDIRAN Arthe;
4)MURUGESAN Minnie;
5)RAMAMURTHI Suresh;

(57) Abstract :
A skin care composition comprising Acanthophora spicifera extract along with conventional additives wherein the said extract is present in a range of 0.1 to 5% by weight.

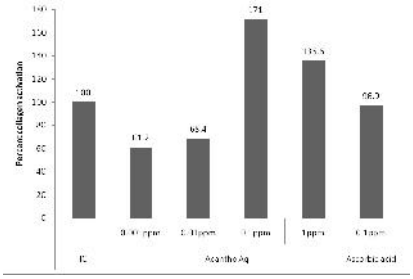

No. of Pages : 18 No. of Claims : 12

(12) PATENT APPLICATION PUBLICATION
(19) INDIA
(22) Date of filing of Application :28/02/2013
(21) Application No.535/KOLNP/2013 A
(43) Publication Date : 05/07/2013

(54) Title of the invention : PROCESS FOR TESTING A LASER DEVICE

(51) International classification :B23K26/03,B23K26/08,B23K26/42
(31) Priority Document No :NA
(32) Priority Date :NA
(33) Name of priority country :NA
(86) International Application No :PCT/EP2010/005971
Filing Date :30/09/2010
(87) International Publication No :WO 2012/041346
(61) Patent of Addition to Application Number :NA
Filing Date :NA
(62) Divisional to Application Number :NA
Filing Date :NA

(71)**Name of Applicant :**
1)WAVELIGHT GMBH
Address of Applicant :AM WOLFSMANTEL 5, 91058 ERLANGEN Germany
(72)**Name of Inventor :**
1)GORSCHBOTH, CLAUDIA
2)WOELFEL, MATHIAS
3)HEIMISCH, RICHARD
4)DONITZKY,CHRISTOF
5)KITTELMANN,OLAF
6)DEISINGER, THOMAS
7)ROBL, GERHARD
8)VOGLER, KLAUS
9)STARIGK, MARTIN

(57) Abstract :
A process is proposed for testing a laser device (10) that has been set up to emit pulsed focused laser radiation, the focal position (18) of which is adjustable both in and across the direction of propagation of the laser radiation. The laser device includes a contact element (30) that is transparent to the laser radiation, with an abutment surface (34) for abutment of an object to be machined. Within the scope of the process, a test object (36) that is transparent to the laser radiation at least in a machining region is applied onto the abutment surface of the contact element. Then laser radiation is beamed into the test object bearing against the abutment surface and in the process the focal position is moved in accordance with a predetermined test pattern, in order to generate enduring machining structures in the test object.

No. of Pages : 21 No. of Claims : 20

(12) PATENT APPLICATION PUBLICATION
(19) INDIA
(22) Date of filing of Application :12/02/2013
(21) Application No.364/KOLNP/2013 A
(43) Publication Date : 05/07/2013

(54) Title of the invention : EASY TEAR POLYPROPYLENE FILM WITHOUT NOTCH

(51) International classification :C08J5/18,C08L23/10,C08L23/16
(31) Priority Document No :10172573.7
(32) Priority Date :12/08/2010
(33) Name of priority country :EPO
(86) International Application No :PCT/EP2011/063882
Filing Date :11/08/2011
(87) International Publication No :WO 2012/020106
(61) Patent of Addition to Application Number :NA
Filing Date :NA
(62) Divisional to Application Number :NA
Filing Date :NA

(71)**Name of Applicant :**
1)BOREALIS AG
Address of Applicant :IZD TOWER, WAGRAMERSTRABE 17-19, A-1220 VIENNA Austria
2)PT ISKI
(72)**Name of Inventor :**
1)WIPPEL , HERBERT
2)NIEDERSÜB, PETER

(57) Abstract :
Polypropylene films produced of a highly crystalline polypropylene blended with a high melt strength polypropylene resin and containing an alpha nucleating agent. These films produced with blown film or cast film technology show low tear resistance in machine direction as well as in transversal direction. These materials can be used as films for packaging material.

No. of Pages : 42 No. of Claims : 15

(12) PATENT APPLICATION PUBLICATION
(19) INDIA
(22) Date of filing of Application :13/02/2013
(21) Application No.383/KOLNP/2013 A
(43) Publication Date : 05/07/2013

(54) Title of the invention : ELECTRODE FOR LITHIUM BATTERIES AND ITS METHOD OF MANUFACTURE

(51) International classification :H01M4/66,H01M10/0525,H01M4/74
(31) Priority Document No :1057592
(32) Priority Date :22/09/2010
(33) Name of priority country :France
(86) International Application No :PCT/FR2011/051996
Filing Date :31/08/2011
(87) International Publication No :WO 2012/038634
(61) Patent of Addition to Application Number :NA
Filing Date :NA
(62) Divisional to Application Number :NA
Filing Date :NA

(71)**Name of Applicant :**
1)COMMISSARIAT A L'ENERGIE ATOMIQUE ET AUX ENERGIES ALTERNATIVES
Address of Applicant :25 RUE LEBLANC, B,TIMENT LE PONANT D 75015 PARIS France
(72)**Name of Inventor :**
1)SOLAN, SÉBASTIEN
2)GIROUD, NELLY

(57) Abstract :
Method of producing an electrode for a lithium battery comprising the following steps: deposition of an ink on a current collector, by coating or printing, said ink comprising at least one electrode active material, at least one polymeric binder, at least one electronic conductor; drying: evaporation of the solvent; the current collector being porous and made of woven or non-woven carbon fibres; the polymeric binder of the ink being PAAc, in particular when the current collector is made of non-woven carbon fibres. Electrode for lithium battery and battery obtained according to this method.

No. of Pages : 21 No. of Claims : 10

(12) PATENT APPLICATION PUBLICATION
(21) Application No.425/KOLNP/2013 A
(19) INDIA
(22) Date of filing of Application :19/02/2013
(43) Publication Date : 05/07/2013

(54) Title of the invention : ARRANGEMENT FOR GRAPHICALLY VISUALIZING SYSTEM CONDITIONS

(51) International classification :G06T11/20,G06F3/048
(31) Priority Document No :10 2010 045 464.8
(32) Priority Date :14/09/2010
(33) Name of priority country :Germany
(86) International Application No :PCT/EP2011/065103
Filing Date :01/09/2011
(87) International Publication No :WO 2012/034868
(61) Patent of Addition to Application Number :NA
Filing Date :NA
(62) Divisional to Application Number :NA
Filing Date :NA

(71)**Name of Applicant :**
1)SIEMENS AKTIENGESELLSCHAFT
Address of Applicant :WITTELSBACHERPLATZ 2, 80333 MÜNCHEN Germany
(72)**Name of Inventor :**
1)JENS-HARRO OECHSNER

(57) Abstract :
The invention relates to an arrangement for graphically visualizing system conditions, having at least one system (1; 1.1, 1.2, 1.3... 1.n) comprising a graphical output (7; 7.1, 7.2... 7.n) in particular a train tracking system for railroad safety engineering. In order to adapt the graphic design to modern requirements without modifying the system software, the system (1; 1.1, 1.2, 1.3... 1.n) is connected to a device (5) for converting the graphical output (7; 7.1, 7.2... 7.n) into a higher-order language data format for generating an arbitrary graphic design.

No. of Pages : 16 No. of Claims : 5

(12) PATENT APPLICATION PUBLICATION
(19) INDIA
(22) Date of filing of Application :21/02/2013
(21) Application No.449/KOLNP/2013 A
(43) Publication Date : 05/07/2013

(54) Title of the invention : METHOD AND SYSTEM FOR CONTROLLING DISTORTION IN A CRITICAL FREQUENCY BAND OF AN AUDIO SIGNAL

(51) International classification :H03G9/18,H04R3/04
(31) Priority Document No :61/401,746
(32) Priority Date :18/08/2010
(33) Name of priority country :U.S.A.
(86) International Application No :PCT/US2011/047333
Filing Date :11/08/2011
(87) International Publication No :WO 2012/024144
(61) Patent of Addition to Application Number :NA
Filing Date :NA
(62) Divisional to Application Number :NA
Filing Date :NA

(71)**Name of Applicant :**
1)DOLBY LABORATORIES LICENSING CORPORATION
Address of Applicant :100 POTRERO AVENUE, SAN FRANCISCO,CALIFORNIA 94103-4813 U.S.A.
(72)**Name of Inventor :**
1)POTARD ,GUILLAUME

(57) Abstract :
In some embodiments, a method and system for controlling distortion of the output of a miniature speaker by attenuating critical frequency band of the input signal to be reproduced, using tuning parameters that have been predetermined where the critical frequency band is a frequency range of the speaker s frequency response in which Total Harmonic Distortion (THD) peaks. The distortion control is performed in a manner which allows an increase in the average loudness of the speaker s output without significantly increasing distortion. The tuning parameters include a center frequency and a bandwidth of the critical frequency band, and a power threshold value. In some embodiments, the system is a loudness maximizer configured to limit distortion of a speaker s output by limiting distortion in a critical frequency band using predetermined control parameters and limit the dynamic range of the output signal and increase its perceived overall average loudness level.

No. of Pages : 46 No. of Claims : 50

(12) PATENT APPLICATION PUBLICATION
(21) Application No.540/KOLNP/2013 A
(19) INDIA
(22) Date of filing of Application :28/02/2013
(43) Publication Date : 05/07/2013

(54) Title of the invention : APPARATUS FOR FAST AND RELIABLE CHECKING OF LUMINESCENT VALUE DOCUMENTS.

(51) International classification :G07D
(31) Priority Document No :10 2004 035 494.4
(32) Priority Date :22/07/2004
(33) Name of priority country :Germany
(86) International Application No :PCT/EP2005/007872
Filing Date :19/07/2005
(87) International Publication No : WO/2006/010537
(61) Patent of Addition to Application Number :NA
Filing Date :NA
(62) Divisional to Application Number :3926/KOLNP/2006
Filed on :27/12/2006

(71)**Name of Applicant :**
1)GIESECKE & DEVRIENT GMBH
Address of Applicant :PRINZREGENTENSTRASSE 159, 81677 MUNCHEN Germany
(72)**Name of Inventor :**
1)GIERING, THOMAS
2)BLOSS, MICHAEL
3)DECKENBACH, WOLFGANG
4)CLARA, MARTIN
5)EHRL, HANS-PETER

(57) Abstract :
An apparatus (1) for enabling fast and reliable checking of luminescent value documents (BN) is disclosed. The apparatus comprises: a luminescence radiation exciting light source and a luminescence sensor (12) arranged to detect with spectral resolution luminescence radiation excited by the light source emanating from a value document illuminated by the light source, characterized in that said light source produces on the value document when the document is transported in a transport direction (T) past the luminescence sensor an illumination area extending in the transport direction, and in that one detector unit (27) is arranged to measure the zeroth order of spectrally decomposed luminescence radiation and another detector unit (21) for measuring another order of spectrally decomposed luminescence radiation.

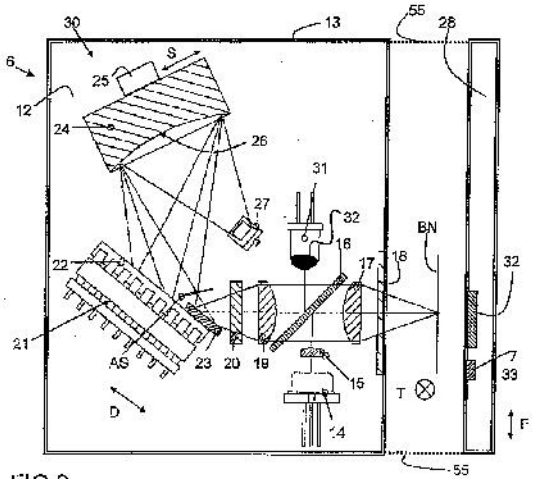

No. of Pages : 32 No. of Claims : 10

(12) PATENT APPLICATION PUBLICATION
(19) INDIA
(22) Date of filing of Application :01/02/2013
(21) Application No.286/KOLNP/2013 A
(43) Publication Date : 05/07/2013

(54) Title of the invention : PHARMACEUTICAL FORMULATION COMPRISING A PHOSPHODIESTERASE INHIBITOR

(51) International classification	:A61K9/00,A61K31/44,A61P11/06
(31) Priority Document No	:10171734.6
(32) Priority Date	:03/08/2010
(33) Name of priority country	:EPO
(86) International Application No	:PCT/EP2011/062527
Filing Date	:21/07/2011
(87) International Publication No	:WO 2012/016845
(61) Patent of Addition to Application Number	:NA
Filing Date	:NA
(62) Divisional to Application Number	:NA
Filing Date	:NA

(71)**Name of Applicant :**
1)CHIESI FARMACEUTICI S.p.A.
Address of Applicant :Via Palermo, 26/A, I-43100 Parma ITALY
(72)**Name of Inventor :**
1)BONELLI, Sauro
2)LOSI, Elena
3)ZAMBELLI, Enrico

(57) Abstract :
The invention relates to a pharmaceutical formulation to be administered by pressurized metered dose inhalers (pMDIs), comprising a compound of general formula (I). The invention also relates to the process for the preparation and to a pressurized metered dose inhaler filled with said pharmaceutical formulation.

No. of Pages : 27 No. of Claims : 15

(12) PATENT APPLICATION PUBLICATION
(19) INDIA
(22) Date of filing of Application :06/02/2013

(21) Application No.324/KOLNP/2013 A
(43) Publication Date : 05/07/2013

(54) Title of the invention : FIELD CROP SPRAY APPARATUS FOR SPRAYING CROPS WITH LIQUIDS

(51) International classification :A01M7/00
(31) Priority Document No :2005035
(32) Priority Date :06/07/2010
(33) Name of priority country :Netherlands
(86) International Application No :PCT/NL2011/050491
Filing Date :06/07/2011
(87) International Publication No :WO 2012/005584
(61) Patent of Addition to Application Number :NA
Filing Date :NA
(62) Divisional to Application Number :NA
Filing Date :NA

(71)**Name of Applicant :**
1)HOEBEN, Henricus Johannes Godefridus Maria
Address of Applicant :Rummeling 5, NL-6026 RH Maarheeze, The Netherlands
(72)**Name of Inventor :**
1)HOEBEN, Henricus Johannes Godefridus Maria

(57) Abstract :
A field crop spray apparatus (1) comprises a carrier (5) which can be coupled to an agricultural tractor. A plurality of frames (7) are attached to the bottom of the carrier. The free ends of the frames are provided with rotation dampers (9) to which an elongated blade (11) is fitted. This blade runs parallel to the carrier (5) and sprayers (13) are present on top of the blade (11). The field crop spray apparatus (1) further comprises a cylinder (15) which is connected to the carrier (5), and also a piston (17) that is movable inside the cylinder (15) and is connected to the blade. The piston (17) can be moved with one end in a slot (19) present in the blade (11) and can also be disconnected from the blade.

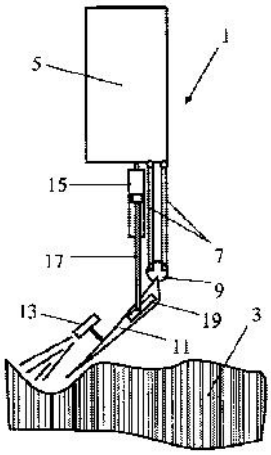

No. of Pages : 7 No. of Claims : 6

(12) PATENT APPLICATION PUBLICATION
(19) INDIA
(22) Date of filing of Application :19/02/2013
(21) Application No.426/KOLNP/2013 A
(43) Publication Date : 05/07/2013

(54) Title of the invention : HEAD COOLING PILLOW AND HEAD COOLING DEVICE

(51) International classification :A61F7/10,A47G9/10
(31) Priority Document No :2010-254149
(32) Priority Date :12/11/2010
(33) Name of priority country :Japan
(86) International Application No :PCT/JP2011/005529
Filing Date :30/09/2011
(87) International Publication No :WO 2012/063400
(61) Patent of Addition to Application Number :NA
Filing Date :NA
(62) Divisional to Application Number :NA
Filing Date :NA

(71)**Name of Applicant :**
1)LIGHT OPTICAL WORKS, LTD.
Address of Applicant :3637,NAKASU,SUWA-CITY,NAGANO 3920015,Japan
(72)**Name of Inventor :**
1)IWANAMI, MASATOMI
2)URAI, KATSUJI

(57) Abstract :
[Problem] To provide a head-cooling pillow capable of increasing head-cooling efficiency and controlling pressure elevation inside the pillow while also making the pillow more comfortable when a person's head is placed thereon. [Solution] The head-cooling pillow (2) is provided with a main pillow body (11) that is formed in the shape of a sac through which a coolant is passed, a partitioning part (12b) disposed inside the main pillow body (11) to form a channel (13) through which the coolant passes, and support parts (12c) for supporting the user's head. In the head-cooling pillow (2), the head is cooled by the coolant that passes through the channel (13).

No. of Pages : 35 No. of Claims : 12

(12) PATENT APPLICATION PUBLICATION
(21) Application No.541/KOLNP/2013 A
(19) INDIA
(22) Date of filing of Application :28/02/2013
(43) Publication Date : 05/07/2013

(54) Title of the invention : AN APPARATUS CHECKING LUMINESCENT VALUE DOCUMENTS FAST AND RELIABLY

(51) International classification :G07D
(31) Priority Document No :10 2004 035 494.4
(32) Priority Date :22/07/2004
(33) Name of priority country :Germany
(86) International Application No :PCT/EP2005/007872
Filing Date :19/07/2005
(87) International Publication No : WO/2006/010537
(61) Patent of Addition to Application Number :NA
Filing Date :NA
(62) Divisional to Application Number :3926/KOLNP/2006
Filed on :27/12/2006

(71)**Name of Applicant :**
1)GIESECKE & DEVRIENT GMBH
Address of Applicant :PRINZREGENTENSTRASSE 159, 81677 MUNCHEN Germany
(72)**Name of Inventor :**
1)GIERING, THOMAS
2)BLOSS, MICHAEL
3)DECKENBACH, WOLFGANG
4)CLARA, MARTIN
5)EHRL, HANS-PETER

(57) Abstract :
An apparatus (1) for enabling fast and reliable checking of luminescent value documents (BN) is disclosed. The apparatus comprises: a luminescence radiation exciting light source and a luminescence sensor (12) arranged to detect with spectral resolution luminescence radiation excited by the light source emanating from a value document illuminated by the light source, characterized in that said light source produces on the value document when the document is transported in a transport direction (T) past the luminescence sensor an illumination area extending in the transport direction (T), and in that the measured values of the luminescence sensor (12) may be evaluated for one value document while measured values of a subsequent value document are already being sensed at the same time.

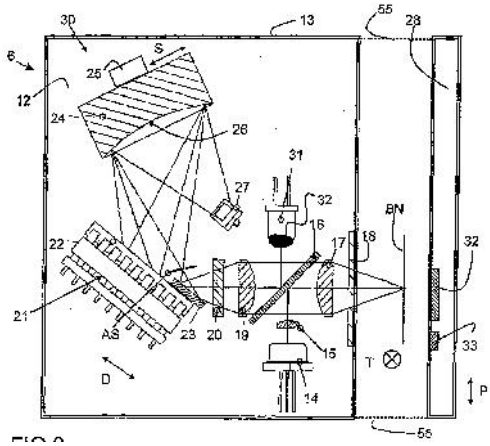

No. of Pages : 32 No. of Claims : 10

(12) PATENT APPLICATION PUBLICATION
(19) INDIA
(22) Date of filing of Application :28/02/2013
(21) Application No.542/KOLNP/2013 A
(43) Publication Date : 05/07/2013

(54) Title of the invention : APPARATUS FOR CHECKING LUMINESCENT VALUE DOCUMENTS FAST AND RELIABLY.

(51) International classification :G07D
(31) Priority Document No :10 2004 035 494.4
(32) Priority Date :22/07/2004
(33) Name of priority country :Germany
(86) International Application No :PCT/EP2005/007872
Filing Date :19/07/2005
(87) International Publication No :WO/2006/010537
(61) Patent of Addition to Application Number :NA
Filing Date :NA
(62) Divisional to Application Number :3926/KOLNP/2006
Filed on :27/12/2006

(71)**Name of Applicant :**
1)GIESECKE & DEVRIENT GMBH
Address of Applicant :PRINZREGENTENSTRASSE 159, 81677 MUNCHEN Germany
(72)**Name of Inventor :**
1)GIERING, THOMAS
2)BLOSS, MICHAEL
3)DECKENBACH, WOLFGANG
4)CLARA, MARTIN
5)EHRL, HANS-PETER

(57) Abstract :
An apparatus (1) for enabling fast and reliable checking of luminescent value documents (BN) is disclosed. The apparatus comprises: a luminescence radiation exciting light source and a luminescence sensor (12), characterized in that said light source produces on the value document when the document is transported in a transport direction (T) past the luminescence sensor an illumination area extending in the transport direction (T), and in that the luminescence sensor (12) comprises a detector row (22) having single pixels and at least two separate amplifier stages (45) and subsequent analog/digital converters (46), and in that each of said amplifier stages (45) amplifies measuring signals of only one of said pixels and supplies the amplified signals to a corresponding one of said subsequent analog/digital converters (46), and in that the measuring signals of the pixels amplified by said amplifier stages (45) are read in parallel.

No. of Pages : 32 No. of Claims : 10

(12) PATENT APPLICATION PUBLICATION
(21) Application No.368/KOLNP/2013 A
(19) INDIA
(22) Date of filing of Application :12/02/2013
(43) Publication Date : 05/07/2013

(54) Title of the invention : METHOD AND APPARATUS FOR ADAPTIVE SCHEDULING BASED ON COORDINATED RANK IN MULTI -CELL COMMUNICATION SYSTEM

(51) International classification :H04W72/12,H04B7/02
(31) Priority Document No :61/377,265
(32) Priority Date :26/08/2010
(33) Name of priority country :U.S.A.
(86) International Application No :PCT/KR2011/006298
Filing Date :25/08/2011
(87) International Publication No :WO 2012/026773
(61) Patent of Addition to Application Number :NA
Filing Date :NA
(62) Divisional to Application Number :NA
Filing Date :NA

(71)**Name of Applicant :**
1)SAMSUNG ELECTRONICS CO., LTD.
Address of Applicant :129,SAMSUNG-RO, YEONGTONG-GU SUWON-SI,GYEONGGI-DO 443-742 Republic of Korea
(72)**Name of Inventor :**
1)CLERCKX ,BRUNO
2)LEE, HEUN CHUL
3)HONG, YOUNG JUN
4)KIM , KI LI

(57) Abstract :
An adaptive scheduling method and apparatus that adaptively perform scheduling based on a coordinated rank in a multi-cell communication system are provided. A master base station may schedule, with a first priority, master terminals, each of which has a preferred rank equal to a transmission rank of the master base station, and may transmit, to a slave base station, information associated with a group of scheduled master terminals. The slave base station may schedule, with different priorities, slave terminals based on whether a transmission rank of the slave base station is equal to the coordinated rank for the master base station.

No. of Pages : 69 No. of Claims : 15

(12) PATENT APPLICATION PUBLICATION
(19) INDIA
(22) Date of filing of Application :14/02/2013
(21) Application No.387/KOLNP/2013 A
(43) Publication Date : 05/07/2013

(54) Title of the invention : PRESSING APPARATUS FOR ABSORBENT ARTICLES, AND PRESSING METHOD

(51) International classification :A61F13/15,A61F13/49,B29C43/24
(31) Priority Document No :2010-194485
(32) Priority Date :31/08/2010
(33) Name of priority country :Japan
(86) International Application No :PCT/JP2011/068843
Filing Date :22/08/2011
(87) International Publication No :WO 2012/029573
(61) Patent of Addition to Application Number :NA
Filing Date :NA
(62) Divisional to Application Number :NA
Filing Date :NA

(71)**Name of Applicant :**
1)UNI -CHARM CORPORATION
Address of Applicant :182, KINSEICHOSHIMOBUN, SHIKOKUCHUO-SHI,EHIME 799-0111 Japan
(72)**Name of Inventor :**
1)FUJIWARA, TOMOHIRO
2)ISHIKAWA,OSAMU

(57) Abstract :
A pressing apparatus is provided with a pair of rollers which are driven in rotation while the outer peripheral surfaces thereof are facing each other. When a continuous fibrous sheet on which a polymer is layered with a thermoplastic adhesive interposed is passed through the gap between the pair of rollers in the continuation direction of the continuous fibrous sheet, the polymer and the continuous fibrous sheet are compressed by the outer peripheral surfaces of the rollers into a single piece. The pressing apparatus comprises a heating mechanism for heating at least the roller on the side of the continuous fibrous sheet. The rollers are heated by the heating mechanism in such a way that the temperature of the outer peripheral surfaces of the rollers is within the range of 70ºC - 120ºC.

No. of Pages : 34 No. of Claims : 5

(12) PATENT APPLICATION PUBLICATION
(21) Application No.543/KOLNP/2013 A
(19) INDIA
(22) Date of filing of Application :28/02/2013
(43) Publication Date : 05/07/2013

(54) Title of the invention : LIGHT FOCUSING CONTINUOUS WAVE PHOTOACOUSTIC SPECTROSCOPY AND ITS APPLICATIONS TO PATIENT MONITORING

(51) International classification :A61B5/00,G01N21/17
(31) Priority Document No :12/845,198
(32) Priority Date :28/07/2010
(33) Name of priority country :U.S.A.
(86) International Application No :PCT/US2011/043029
Filing Date :06/07/2011
(87) International Publication No :WO 2012/015566
(61) Patent of Addition to Application Number :NA
Filing Date :NA
(62) Divisional to Application Number :NA
Filing Date :NA

(71)**Name of Applicant :**
1)COVIDIEN LP
Address of Applicant :15 HAMPSHIRE STREET MANSFIELD, MA 02048 U.S.A.
(72)**Name of Inventor :**
1)LI, YOUZHI
2)MCKENNA, EDWARD
3)LINN, ANDY

(57) Abstract :
The present disclosure describes systems and methods that use spatial modulation to focus continuous wave light into a localized region of interest such as an individual blood vessel. In certain embodiments,intensity modulation techniques,such as linear frequency modulation, are used in conjunction with spatial modulation to achieve more precise measurements through otherwise scattering medium. The focused beam of continuous wave light is capable of penetrating several centimeters of tissue to deliver measurements and images associated with individual blood vessels and other discrete vascular components.

No. of Pages : 26 No. of Claims : 20

(12) PATENT APPLICATION PUBLICATION
(19) INDIA
(22) Date of filing of Application :28/02/2013
(21) Application No.544/KOLNP/2013 A
(43) Publication Date : 05/07/2013

(54) Title of the invention : ANTIVIBRATION RUBBER DEVICE

(51) International classification :F16F13/18,B60K5/12,C08L15/02
(31) Priority Document No :2010-202827
(32) Priority Date :10/09/2010
(33) Name of priority country :Japan
(86) International Application No :PCT/JP2011/070169
Filing Date :05/09/2011
(87) International Publication No :WO 2012/033052
(61) Patent of Addition to Application Number :NA
Filing Date :NA
(62) Divisional to Application Number :NA
Filing Date :NA

(71)**Name of Applicant :**
1)HONDA MOTOR CO.,LTD.
Address of Applicant :1-1,MINAMI-AOYAMA 2-CHOME,MINATO-KU,TOKYO 1078556 Japan
2)YAMASHITA RUBBER CO.,LTD.
(72)**Name of Inventor :**
1)GOSHIMA, YASUHIRO
2)WATANABE,TOSHIMICHI
3)HIROKAWA,TERUYUKI
4)AIZAWA, JUN

(57) Abstract :
An antivibration rubber device provided between a vibration source and a vehicle body is characterized by being provided with a first mounting member (11) which is mounted to the vibration source side,an elastic member (13) which is closely attached to the surface of the first mounting member (11) and has a step formed at the end thereof on the vibration source side, and a second mounting member (12) which is integrally coupled to the first mounting member (11) via the elastic member (13) and mounted to the vehicle body side,thereby suppressing the occurrence of a crack in the elastic member of the antivibration rubber device and improving durability enabling long term use.

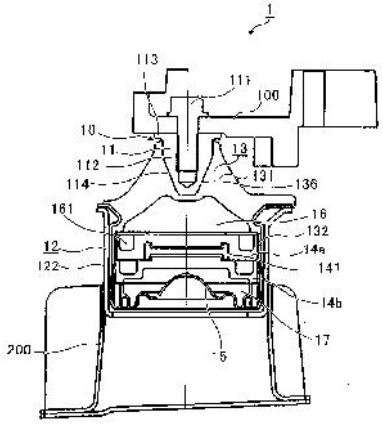

No. of Pages : 30 No. of Claims : 12

(12) PATENT APPLICATION PUBLICATION
(21) Application No.545/KOLNP/2013 A
(19) INDIA
(22) Date of filing of Application :28/02/2013
(43) Publication Date : 05/07/2013

(54) Title of the invention : BALANCED PHACOEMULSIFICATION TIP

(51) International classification :A61F9/007
(31) Priority Document No :12/884,285
(32) Priority Date :17/09/2010
(33) Name of priority country :U.S.A.
(86) International Application No :PCT/US2011/046362
Filing Date :03/08/2011
(87) International Publication No :WO 2012/036795
(61) Patent of Addition to Application Number :NA
Filing Date :NA
(62) Divisional to Application Number :NA
Filing Date :NA

(71)**Name of Applicant :**
1)ALCON RESEARCH,LTD.
Address of Applicant :6201 SOUTH FREEWAY, TB4-8, FORT WORTH,TEXAS 76134 U.S.A.
(72)**Name of Inventor :**
1)OVCHINNIKOV, MIKHAIL A.

(57) Abstract :
In various embodiments, a phacoemulsification tip may include a shaft and a cutting edge portion having at least a first and second bend. The geometry of the tip may be configured to result in a lateral displacement (ux), perpendicular to the shaft during torsional vibration of the tip at frequencies between 10 kHz and 60 kHz ,of less than approximately 5% to 25% (e.g. , 15%) of the lateral displacement at the distal end point of the tip throughout a portion of the shaft extending from the end of a conical portion of the tip through to the first bend in the cutting edge portion of the tip. Software and/or physical modeling may be used to determine the tip geometry.

No. of Pages : 44 No. of Claims : 20

(12) PATENT APPLICATION PUBLICATION
(21) Application No.411/KOLNP/2013 A
(19) INDIA
(22) Date of filing of Application :18/02/2013
(43) Publication Date : 05/07/2013

(54) Title of the invention : FASTENING ELEMENT

(51) International classification :F16B19/08,F16B25/00
(31) Priority Document No :10 2010 039 659.1
(32) Priority Date :24/08/2010
(33) Name of priority country :Germany
(86) International Application No :PCT/EP2011/064470
Filing Date :23/08/2011
(87) International Publication No :WO 2012/025526
(61) Patent of Addition to Application Number :NA
Filing Date :NA
(62) Divisional to Application Number :NA
Filing Date :NA

(71)**Name of Applicant :**
1)WÜRTH INTERNATIONAL AG
Address of Applicant :ASPERMONTSTRASSE 1, CH-7000 CHUR,Switzerland
2)WÜRTH INTERNATIONAL AG
(72)**Name of Inventor :**
1)FRANK, UWE

(57) Abstract :
The invention relates to a fastening element which can be designed as a blind rivet or screw and is intended for driving into an unpunched workpiece. In the front region for driving into the workpiece said fastening element includes a cylindrical punching tip which has a front end face extending obliquely with respect to the longitudinal axis. The punching tip may be smaller in diameter than the body of the fastening element or may also have the same diameter. The intersection of the end face with the outer face of the punching tip forms a circumferential edge. Because the end face extends obliquely said circumferential edge is disposed so that when the fastening element is driven in the circumferential edge first strikes the plate at one or also at two points and the opening in the plate is enlarged by cutting away the plate at a point travelling around the circumference.

No. of Pages : 19 No. of Claims : 14

(12) PATENT APPLICATION PUBLICATION
(19) INDIA
(22) Date of filing of Application :20/02/2013
(21) Application No.432/KOLNP/2013 A
(43) Publication Date : 05/07/2013

(54) Title of the invention : DEVICE FOR THE CHROMATOGRAPHIC SEPARATION OF A SUBSTANCE MIXTURE AND USE THEREOF

(51) International classification :G01N30/60
(31) Priority Document No :10 2010 049 789.4
(32) Priority Date :29/10/2010
(33) Name of priority country :Germany
(86) International Application No :PCT/EP2011/005217
Filing Date :18/10/2011
(87) International Publication No :WO 2012/055499
(61) Patent of Addition to Application Number :NA
Filing Date :NA
(62) Divisional to Application Number :NA
Filing Date :NA

(71)**Name of Applicant :**
1)FRESENIUS MEDICAL CARE DEUTSCHLAND GMBH
Address of Applicant :ELSE-KRÖNER-STRASSE 1, 61352 BAD HOMBURG,Germany
(72)**Name of Inventor :**
1)LEINENBACH , HANS-PETER
2)GERNER, FRANZ-JOSEF
3)KUHN, STEFAN
4)PRIESNITZ, PATRICK

(57) Abstract :
The invention relates to a multifunctional device and to the use thereof for the chromatographic separation, in particular for the affinity chromatographic separation, of a substance mixture, whereby a uniform fluid distribution on the separating medium and a uniform flow through the stationary phase are made possible by guiding the fluid to be separated via a radial feed line in the upper portion of the device to the centre thereof wherein the radial feed line widens in a dome shape in the centre.

No. of Pages : 28 No. of Claims : 22

(12) PATENT APPLICATION PUBLICATION
(19) INDIA
(22) Date of filing of Application :01/03/2013

(21) Application No.551/KOLNP/2013 A
(43) Publication Date : 05/07/2013

(54) Title of the invention : VEHICLE

(51) International classification :B60K15/00
(31) Priority Document No :2010-213638
(32) Priority Date :24/09/2010
(33) Name of priority country :Japan
(86) International Application No :PCT/IB2011/001977
Filing Date :29/08/2011
(87) International Publication No :WO 2012/038790
(61) Patent of Addition to Application Number :NA
Filing Date :NA
(62) Divisional to Application Number :NA
Filing Date :NA

(71)**Name of Applicant :**
1)NISSAN MOTOR CO., LTD.
Address of Applicant :2, Takara-cho, Kanagawa-ku Yokohama-shi, Kanagawa 221-0023, Japan
(72)**Name of Inventor :**
1)NAKANO Yuzo
2)ASO Takeshi

(57) Abstract :
A vehicle (100) includes a fuel tank (14), a fuel amount detecting device and a control device (24). The fuel amount detecting device (33) is configured to detect an amount of fuel inside the fuel tank (14). The control device (24) is configured to calculate an estimated refueling amount that diminishes fuel inside the fuel tank (14) from degrading based on a usage history of the vehicle (100). The control device (24) is further configured such that the control device (24) stops refueling based on an amount of fuel detected by the fuel amount detecting device (33) and the estimated refueling amount.

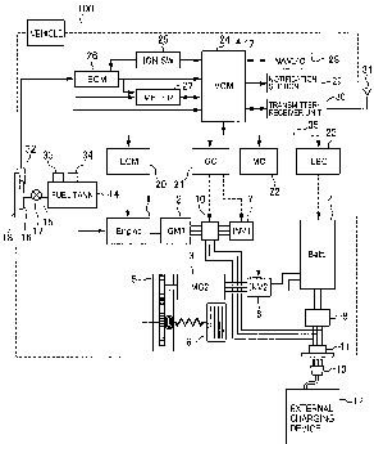

No. of Pages : 49 No. of Claims : 8

(12) PATENT APPLICATION PUBLICATION
(19) INDIA
(22) Date of filing of Application :01/03/2013

(21) Application No.552/KOLNP/2013 A
(43) Publication Date : 05/07/2013

(54) Title of the invention : TORQUE CONVERTER

(51) International classification :F16H41/24
(31) Priority Document No :2010-204542
(32) Priority Date :13/09/2010
(33) Name of priority country :Japan
(86) International Application No :PCT/JP2011/070280
Filing Date :06/09/2011
(87) International Publication No :WO 2012/036030
(61) Patent of Addition to Application Number :NA
Filing Date :NA
(62) Divisional to Application Number :NA
Filing Date :NA

(71)**Name of Applicant :**
1)NISSAN MOTOR CO., LTD.
Address of Applicant :2, Takara-cho, Kanagawa-ku Yokohama-shi, Kanagawa 221-0023 Japan

(72)**Name of Inventor :**
1)TAKASHIMA Masato
2)OZAKI Kouji

(57) Abstract :
The present invention provides a torque converter comprising: a pump impeller; a turbine impeller, a first stator impeller, a second stator impeller, a first one way clutch disposed annularly in the inner periphery of the first stator impeller; and a second one way clutch disposed annularly from the inner periphery of the first one way clutch to the inner periphery of the second stator impeller. The first stator impeller is linked to a fixed shaft via the first one way clutch and the second one way clutch, and the second stator impeller is linked to the fixed shaft via the second one way clutch only.

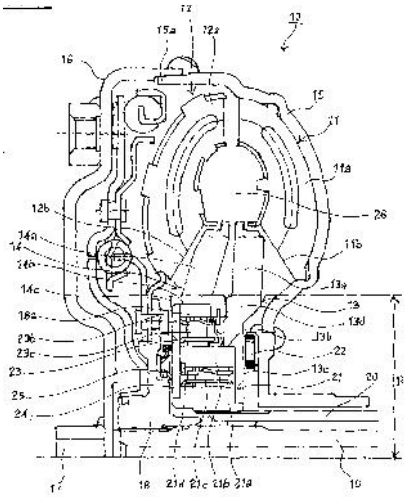

No. of Pages : 14 No. of Claims : 4

(12) PATENT APPLICATION PUBLICATION
(19) INDIA
(22) Date of filing of Application :01/03/2013
(21) Application No.553/KOLNP/2013 A
(43) Publication Date : 05/07/2013

(54) Title of the invention : SESSION CONTROL FOR MEDIA STREAM TRANSMISSION

(51) International classification :H04L29/06,H04L29/08
(31) Priority Document No :NA
(32) Priority Date :NA
(33) Name of priority country :NA
(86) International Application No :PCT/EP2010/004879
Filing Date :10/08/2010
(87) International Publication No :WO 2012/019621
(61) Patent of Addition to Application Number :NA
Filing Date :NA
(62) Divisional to Application Number :NA
Filing Date :NA

(71)**Name of Applicant :**
1)TELEFONAKTIEBOLAGET L M ERICSSON (PUBL)
Address of Applicant :S-164 83 Stockholm, Sweden
(72)**Name of Inventor :**
1)WILLIG, Johannes
2)CATREIN, Daniel
3)HARTUNG, Frank
4)KAMPMANN, Markus

(57) Abstract :
A method for controlling the transmission of a media stream comprising a plurality of consecutive stream elements Is described. The method comprises the step of obtaining (32) a media description of the media stream, the media description indicating an initial element of the stream elements. A request for the initial stream element is sent (34) and a session control procedure is initiated (36) for a session. The media stream is associated (38) with the session in the session control procedure. The transmission of a subsequent element of the stream elements is controlled in accordance with a control rule of the session. Devices and further methods embodying the invention are also described.

No. of Pages : 48 No. of Claims : 27

(12) PATENT APPLICATION PUBLICATION
(19) INDIA
(22) Date of filing of Application :20/02/2013
(21) Application No.433/KOLNP/2013 A
(43) Publication Date : 05/07/2013

(54) Title of the invention : MULTIPLEXING OF CONTROL AND DATA IN UL MIMO SYSTEM BASED ON SC-FDM

(51) International classification	:H04J11/00,H04W72/04,H04B7/04
(31) Priority Document No	:61/377,057
(32) Priority Date	:25/08/2010
(33) Name of priority country	:U.S.A.
(86) International Application No	:PCT/KR2011/006290
Filing Date	:25/08/2011
(87) International Publication No	:WO 2012/026770
(61) Patent of Addition to Application Number	:NA
Filing Date	:NA
(62) Divisional to Application Number	:NA
Filing Date	:NA

(71)**Name of Applicant :**
1)SAMSUNG ELECTRONICS CO., LTD.
Address of Applicant :129,SAMSUNG-RO YEONGTONG-GU,SUWON-SI, GYEONGGI-DO 443-742 KOREA
(72)**Name of Inventor :**
1)NAM, YOUNG-HAN
2)HAN, JIN-KYU
3)ZHANG, JIANZHONG

(57) Abstract :
In a wireless network that operates according to the Long-Term Evolution Advanced standard, a mobile station determines a number of resource elements to be used for HARQ-ACK (hybrid automatic-repeat-request acknowledgement information) or RI (rank indication) on a MIMO (multiple-input multiple-output) PUSCH (physical uplink shared channel). In an embodiment, the mobile station determines a number O of bits in a payload for HARQ ACK or RI. When the payload O is within a first range, the mobile station determines a minimum number Qmin of resource elements to be used according to a first equation. When the payload O is within a second range the mobile station determines the minimum number Qmin of resource elements to be used according to a second equation. The mobile station then determines the number Q of resource elements according to Qmin and a third equation.

No. of Pages : 38 No. of Claims : 11

(12) PATENT APPLICATION PUBLICATION
(21) Application No.457/KOL/2012 A
(19) INDIA
(22) Date of filing of Application :24/04/2012
(43) Publication Date : 05/07/2013

(54) Title of the invention : HIGH-STRENGTH HOT ROLLED STEEL SHEET HAVING GOOD FORMABILITY AND METHOD FOR MANUFACTURING THE SAME

(51) International classification	:B21B
(31) Priority Document No	:2011-289836
(32) Priority Date	:28/12/2011
(33) Name of priority country	:Japan
(86) International Application No	:NA
Filing Date	:NA
(87) International Publication No	: NA
(61) Patent of Addition to Application Number	:NA
Filing Date	:NA
(62) Divisional to Application Number	:NA
Filing Date	:NA

(71)**Name of Applicant :**
1)JFE STEEL CORPORATION
Address of Applicant :2-3,UCHISAIWAI-CHO 2-CHOME, CHIYODA-KU, TOKYO 100-0011 Japan
(72)**Name of Inventor :**
1)NOBUYUKI NAKAMURA
2)KATSUMI NAKAJIMA
3)YOSHIMASA FUNAKAWA

(57) Abstract :
The present invention provides a hot rolled steel sheet which exhibits improved elongation property with maintaining satisfactorily high strength of at least 590 MPa. Specifically, the present invention provides a high-strength hot rolled steel sheet comprising a composition including in mass%: C: 0.03% to 0.15%; Si: 1.5% or less; Mn: 0.5% to 2.0%; P: 0.04% or less; S: 0.005% or less; A1: 0.005 % to 0.10%; N: 0.007 % or less; and the remainder as Fe and incidental impurities, wherein in the steel sheet difference in Vickers hardness between a surface layer portion and the center portion in sheet thickness direction thereof is 50 or less and tensile strength thereof is at least 590 MPa.

No. of Pages : 23 No. of Claims : 10

(12) PATENT APPLICATION PUBLICATION
(19) INDIA
(22) Date of filing of Application :01/03/2013
(21) Application No.554/KOLNP/2013 A
(43) Publication Date : 05/07/2013

(54) Title of the invention : METHOD AND SYSTEM FOR ARRANGING CIGARETTE PACKS

(51) International classification :B65B19/28,B07C5/34,B65G47/82
(31) Priority Document No :PL392413
(32) Priority Date :16/09/2010
(33) Name of priority country :Poland
(86) International Application No :PCT/PL2011/050038
Filing Date :15/09/2011
(87) International Publication No :WO 2012/036578
(61) Patent of Addition to Application Number :NA
Filing Date :NA
(62) Divisional to Application Number :NA
Filing Date :NA

(71)**Name of Applicant :**
1)INTERNATIONAL TOBACCO MACHINERY POLAND SP. Z O.O.
Address of Applicant :Ul. Warsztatowa 19a, PL-26-600 Radom Poland
(72)**Name of Inventor :**
1)SIEREDZINSKI, Marek
2)CHMIELEWSKI, Robert

(57) Abstract :
Method and system for arranging cigarette packs according to the position of the filters of the cigarettes contained in the packs, each pack being provided on its outside with a detectable indicator (5), the position of the indicator on the pack (1) in relation to the filters of the cigarettes contained in the packs being predefined, in which the packs are successively delivered in the form of a first stream (7) of the packs travelling on a conveyor (6) to a detection station (8) for detecting the indicators (5) where the position of the indicator on each particular pack is detected the packs being subsequently arranged depending on the position of the indicator (5) detected thereon by the driving means (12) controlled basing on the information concerning the position of the indicators received from the detection station (8). The arranging consists in dividing the first stream (7) of the packs into at least two separate streams of the travelling packs.

No. of Pages : 20 No. of Claims : 12

(12) PATENT APPLICATION PUBLICATION
(19) INDIA
(22) Date of filing of Application :01/03/2013
(21) Application No.555/KOLNP/2013 A
(43) Publication Date : 05/07/2013

(54) Title of the invention : METHODS AND SYSTEMS FOR POSTERIOR SEGMENT VOLUME MEASUREMENT

(51) International classification :A61M31/00
(31) Priority Document No :61/379,166
(32) Priority Date :01/09/2010
(33) Name of priority country :U.S.A.
(86) International Application No :PCT/US2011/050155
Filing Date :01/09/2011
(87) International Publication No :WO 2012/031085
(61) Patent of Addition to Application Number :NA
Filing Date :NA
(62) Divisional to Application Number :NA
Filing Date :NA

(71)**Name of Applicant :**
1)ALCON RESEARCH, LTD.
Address of Applicant :6201 South Freeway, Fort Worth, Texas 76134 U.S.A.
(72)**Name of Inventor :**
1)HUCULAK, John Christopher

(57) Abstract :
Systems and methods for determining a volume of the posterior segment of an eye during a fluid to gas exchange are described. The determined volume of the posterior segment may be used to determine the volume of pure tamponade gas to be introduced into the posterior segment resulting in a desired tamponade gas to other gas (e.g. air) ratio, such as during an ophthalmic surgical procedure. Particularly, the systems and methods may provide for improved gas utilization, less waste, and reduced surgery time, for example, by accurately measuring the volume of the posterior segment of the eye and only using the amount of pure gas required to produce the desired ratio. Further, in some implementations, mixing of a tamponade gas is accomplished intrinsically within the posterior segment of the eye, thereby avoiding manual mixing and reducing surgery time.

No. of Pages : 35 No. of Claims : 21

(12) PATENT APPLICATION PUBLICATION
(19) INDIA
(22) Date of filing of Application :13/12/2012
(21) Application No.3929/KOLNP/2012 A
(43) Publication Date : 05/07/2013

(54) Title of the invention : MACHINE FOR ASSEMBLING A CARDBOARD BOX

(51) International classification :B31B3/52
(31) Priority Document No :U201030642
(32) Priority Date :18/06/2010
(33) Name of priority country :Spain
(86) International Application No :PCT/ES2011/070273
Filing Date :15/04/2011
(87) International Publication No :WO 2011/157874
(61) Patent of Addition to Application Number :NA
Filing Date :NA
(62) Divisional to Application Number :NA
Filing Date :NA

(71)**Name of Applicant :**
1)BOIX MAQUINARIA, S.L.
Address of Applicant :Polgono Industrial La Granadina, Manzana, 1-Calle 5, E-03349 San Isidro De Albatera (Alicante) Spain
(72)**Name of Inventor :**
1)BOIX JAÍN, José

(57) Abstract :
The invention relates to a machine for assembling a cardboard box including an initial device for placing the laminar bodies on horizontal guides the sides of which include a front device that acts on each laminar body, raising the structure thereof in order to begin assembling the box, and a rear device that assembles the bottom of the box, first folding the inner flaps and then the outer flaps on top of the former, joining said flaps by means of an adhesive. The invention is characterized in that the rear device includes a scissor mechanism (6) defined from a linearly moveable head (19), to which two mobile arms (20)are separately linked, the tilting movements of which are guided by means of inner rails (23) linked to arched grooves (21), the front ends of said mobile arms (20) including roller guides (25) that contact the inner flaps (5) during the folding down of same in one of the assembly stages of the bottom of the box (3).

No. of Pages : 14 No. of Claims : 7

(12) PATENT APPLICATION PUBLICATION
(19) INDIA
(22) Date of filing of Application :19/02/2013

(21) Application No.414/KOLNP/2013 A
(43) Publication Date : 05/07/2013

(54) Title of the invention : VEHICLE

(51) International classification :B60K6/46,B60K15/077,B60L11/12
(31) Priority Document No :2010-166837
(32) Priority Date :26/07/2010
(33) Name of priority country :Japan
(86) International Application No :PCT/JP2011/066863
Filing Date :25/07/2011
(87) International Publication No :WO 2012/014845
(61) Patent of Addition to Application Number :NA
Filing Date :NA
(62) Divisional to Application Number :NA
Filing Date :NA

(71)**Name of Applicant :**
1)NISSAN MOTOR CO., LTD.
Address of Applicant :2,TAKARA-CHO,KANAGAWA-KU YOKOHAMA-SHI, KANAGAWA 221-0023,Japan
(72)**Name of Inventor :**
1)YASUHIRO KONISHI

(57) Abstract :
The present invention is a vehicle provided with a fuel tank, an engine to which fuel is supplied from the fuel tank, and a control device. The present invention is characterized in that the control device reports a fuel supply instruction based on the usage history of the vehicle. According to the present invention, since the necessary fuel supply instruction is reported according to the usage history of the vehicle, the supply of excessive fuel that may deteriorate in the fuel tank can be prevented.

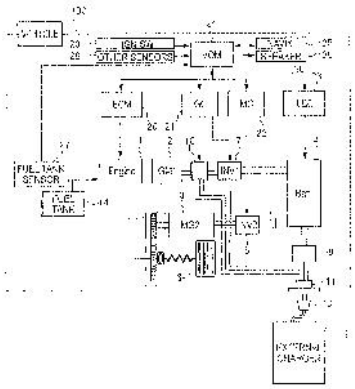

No. of Pages : 32 No. of Claims : 11

(12) PATENT APPLICATION PUBLICATION
(21) Application No.514/KOLNP/2013 A
(19) INDIA
(22) Date of filing of Application :27/02/2013
(43) Publication Date : 05/07/2013

(54) Title of the invention : INVERTER APPARTUS AND INVERTER CONTROL METHOD

(51) International classification :H02M
(31) Priority Document No :2010-206775
(32) Priority Date :15/09/2010
(33) Name of priority country :Japan
(86) International Application No :PCT/IB2011/001978
Filing Date :29/08/2011
(87) International Publication No :WO 2012/035385
(61) Patent of Addition to Application Number :NA
Filing Date :NA
(62) Divisional to Application Number :NA
Filing Date :NA

(71)**Name of Applicant :**
1)NISSAN MOTOR CO. ,LTD.
Address of Applicant :2,TAKARA-CHO,KANAGAWA-KU YOKOHAMA-SHI, KANAGAWA 221-0023 Japan
(72)**Name of Inventor :**
1)HIROMICHI KAWAMURA

(57) Abstract :
An inverter apparatus basically includes an inverter (3), a rotational speed detecting component (12, 26, 27) and a control component (9). The inverter (3) includes a plurality of pairs of switching elements (Q1 to Q6). The control component (9) controls an on-off status of the switching elements (Q1 to Q6) to convert a direct current from a direct current power source (1) into alternating current by alternately executing first and second controls when a rotational speed of a motor (4) connected to the switching elements is larger than a prescribed rotational speed. The first control turns on the switching elements (Q1, Q3, Q5) that are directly connected to a positive electrode of the power source, and turns off the switching elements (Q2, Q4, Q6) that are directly connected to a negative electrode of the power source. The second control turns on the switching elements (Q2, Q4, Q6) that are directly connected to the negative electrode and turns off the switching elements (Q1, Q3, Q5) that are directly connected to the positive electrode.

No. of Pages : 31 No. of Claims : 11

(12) PATENT APPLICATION PUBLICATION
(19) INDIA
(22) Date of filing of Application :01/03/2013
(21) Application No.558/KOLNP/2013 A
(43) Publication Date : 05/07/2013

(54) Title of the invention : SOLAR PANEL ASSEMBLY

(51) International classification :F24J2/54
(31) Priority Document No :2005311
(32) Priority Date :03/09/2010
(33) Name of priority country :Netherlands
(86) International Application No :PCT/NL2011/050605
Filing Date :02/09/2011
(87) International Publication No :WO 2012/030225
(61) Patent of Addition to Application Number :NA
Filing Date :NA
(62) Divisional to Application Number :NA
Filing Date :NA

(71)**Name of Applicant :**
1)EEUWES, Theodorus, Maria
Address of Applicant :Molenstraat 9, NL-6687 AM Angeren The Netherlands
2)ADOLFS, Theodorus, Stephanus, Maria
(72)**Name of Inventor :**
1)ADOLFS, Theodorus, Stephanus, Maria

(57) Abstract :
Solar panel assembly (1) for collecting sunlight comprising an underframe (2), a first solar panel holder (3) and a solar panel (4), wherein the first solar panel holder comprises a basis (32) having a circumference onto which a drive engages for rotation of the first solar panel holder with respect to the underframe about a vertical rotation axis wherein with respect to the first solar panel holder the solar panel is rotatable about a horizontal rotation axis, wherein the solar panel assembly is provided with a second solar panel holder (5) which, when viewed parallel to the vertical rotation axis, is situated fully within the circumference of the basis of the first solar panel holder, wherein the second solar panel holder is rotatable with respect to the underframe about a parallactic rotation axis, wherein the parallactic rotation axis intersects the intersection of the horizontal rotation axis and the vertical rotation axis.

No. of Pages : 54 No. of Claims : 23

(12) PATENT APPLICATION PUBLICATION
(19) INDIA
(22) Date of filing of Application :13/02/2013
(21) Application No.382/KOLNP/2013 A
(43) Publication Date : 05/07/2013

(54) Title of the invention : COMPOUNDS AND METHODS FOR THE TREATMENT OR PREVENTION OF FLAVIVIRIDAE VIRAL INFECTIONS

(51) International classification :C07D333/38,A61K31/381,A61P31/12
(31) Priority Document No :61/374,396
(32) Priority Date :17/08/2010
(33) Name of priority country :U.S.A.
(86) International Application No :PCT/US2011/048027
Filing Date :17/08/2011
(87) International Publication No :WO 2012/024363
(61) Patent of Addition to Application Number :NA
Filing Date :NA
(62) Divisional to Application Number :NA
Filing Date :NA

(71)**Name of Applicant :**
1)VERTEX PHARMACEUTICALS INCORPORATED
Address of Applicant :130 WAVERLY STREET, CAMBRIDGE, MA 02139 U.S.A.
(72)**Name of Inventor :**
1)GREEN ,JEREMY
2)KONG, LAVAL, CHAN CHUN
3)DAS, SANJOY, KUMAR
4)POISSON, CARL
5)NANTHAKUMAR, SUGANTHINI
6)WAAL, NATHAN
7)LI , PAN
8)RONKIN , STEVEN
9)LAUFFER, DAVID, J.
10)WILSON, DEAN, M.

(57) Abstract :
A compound is selected from the structural formulae depicted in FIG. 1 or a pharmaceutically acceptable salt thereof. A pharmaceutical composition comprises a compound selected from the structural formulae depicted in FIG. 1 or a pharmaceutically acceptable salt thereof, and a pharmaceutically acceptable carrier of excipient. A method of treating a HCV infection in a subject comprises administering to the subject a therapeutically effective amount of selected from the structural formulae depicted in FIG. 1 or a pharmaceutically acceptable salt thereof. A method of inhibiting or reducing the activity of HCV polymerase in a subject or in a biological in vitro sample comprises administering to the subject or to the sample a therapeutically effective amount of selected from the structural formulae depicted in FIG. 1 or a pharmaceutically acceptable salt thereof.

No. of Pages : 139 No. of Claims : 20

(12) PATENT APPLICATION PUBLICATION
(21) Application No.423/KOLNP/2013 A
(19) INDIA
(22) Date of filing of Application :19/02/2013
(43) Publication Date : 05/07/2013

(54) Title of the invention : METHOD OF EFFICIENTLY BROADCASTING NETWORK MANAGEMENT MESSAGES IN AN IP BASED SIGNALING NETWORK

(51) International classification :H04M7/06,H04Q3/00,H04L29/06
(31) Priority Document No :NA
(32) Priority Date :NA
(33) Name of priority country :NA
(86) International Application No :PCT/EP2010/061108
Filing Date :30/07/2010
(87) International Publication No :WO 2012/013242
(61) Patent of Addition to Application Number :NA
Filing Date :NA
(62) Divisional to Application Number :NA
Filing Date :NA

(71)**Name of Applicant :**
1)TELEFONAKTIEBOLAGET LM ERICSSON (PUBL)
Address of Applicant :S-164 83 STOCKHOLM,Sweden
(72)**Name of Inventor :**
1)HLIBICIUC, ALEXANDRU
2)DRENSKI, BERNARDIN
3)MEDAK, LUKICA
4)SCHNELL, ROBERT

(57) Abstract :
The application relates to the transport of SS7 signaling over an Internet Protocol based network and in particular to the routing of SS7 Signaling Network Management SSNM Messages such as Destination Unavailable DUNA and Signalling Congestion SCON by a SIGTRAN relay node. The SSNM messages are checked against a so-called validation rule which either specifies a list of allowed affected point codes or a threshold rate of SSNM messages with the same affected point code. If the SSNM message is valid it is sent to a so-called broadcast domain which comprise nodes such as signaling endpoints or component of one or more application servers.

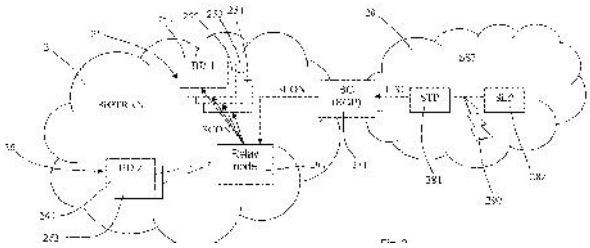

No. of Pages : 30 No. of Claims : 14

(12) PATENT APPLICATION PUBLICATION
(19) INDIA
(22) Date of filing of Application :21/02/2013
(21) Application No.448/KOLNP/2013 A
(43) Publication Date : 05/07/2013

(54) Title of the invention : BELT CONVEYOR WITH AN ACTUATOR FOR MOVING THE BELT IN A LATERAL DIRECTION

(51) International classification :B65G23/44,B65G39/16
(31) Priority Document No :2005222
(32) Priority Date :12/08/2010
(33) Name of priority country :Netherlands
(86) International Application No :PCT/NL2011/050548
Filing Date :03/08/2011
(87) International Publication No :WO 2012/021059
(61) Patent of Addition to Application Number :NA
Filing Date :NA
(62) Divisional to Application Number :NA
Filing Date :NA

(71)**Name of Applicant :**
1)C.C.M. BEHEER B.V.
Address of Applicant :24,DE PINCKART, NL-5674 CC NUENEN THE NETHERLANDS
(72)**Name of Inventor :**
1)BELTMAN , AREND-JAN JOHAN
2)BRALS, ALBERT
3)PLAK, RONALD
4)SIMONS , JASPER ANNE FRIDO MARIKUS

(57) Abstract :
A positioning assembly is provided with an endless loop conveyor belt for transporting an object and a first and second roller (12) arranged inside the endless loop. A mounting is provided for mounting the first and second roller to a frame (15). A first mounting part connected to a first end of the first roller (12) and a second mounting part connected to a second end of the first roller (12) are independently movable in a length direction of the conveyor with respect to the frame (15). An actuator system is provided which comprises a first lateral actuator (61) arranged to move at least a part of the first roller (12) in a direction parallel to the rotational axes (106) of the first roller (12). The first roller (12) is longitudinally divided into at least two longitudinal segments. The first lateral actuator (61) moves at least one of the longitudinal segments parallel to the rotational axis (106) of the first roller (12).

No. of Pages : 32 No. of Claims : 12

(12) PATENT APPLICATION PUBLICATION
(21) Application No.560/KOLNP/2013 A
(19) INDIA
(22) Date of filing of Application :01/03/2013
(43) Publication Date : 05/07/2013

(54) Title of the invention : METHOD OF INSTALLING A MULTI-LAYER BATT, BLANKET OR MAT IN AN EXHAUST GAS AFTERTREATMENT OR ACOUSTIC DEVICE

(51) International classification :B01D50/00
(31) Priority Document No :12/894,712
(32) Priority Date :30/09/2010
(33) Name of priority country :U.S.A.
(86) International Application No :PCT/US2011/038142
Filing Date :26/05/2011
(87) International Publication No :WO 2012/044375
(61) Patent of Addition to Application Number :NA
Filing Date :NA
(62) Divisional to Application Number :NA
Filing Date :NA

(71)**Name of Applicant :**
1)TENNECO AUTOMOTIVE OPERATING COMPANY, INC.
Address of Applicant :500 North Field Drive, Lake Forest, IL 60045 U.S.A.
(72)**Name of Inventor :**
1)MYERS, Stephen, J.

(57) Abstract :
A method is provided for installing a multi- layer mat (24) in an exhaust gas aftertreatment or acoustic device. The method includes the steps of wrapping the mat (24) around an inner surface of the device along the same plane for at least a complete wrap around the inner surface; subsequently wrapping the mat (24) around the already completed wrap such that each of the successive wraps of the mat (24) are offset a constant distance from the plane of the previous wrap; a final wrap of the mat (24) wherein the mat is wrapped along a final plane for at least a complete wrap around the catalyst; and installing the mat (24) in the device (18) after the wrapping steps.

No. of Pages : 19 No. of Claims : 13

(12) PATENT APPLICATION PUBLICATION
(19) INDIA
(22) Date of filing of Application :14/02/2013

(21) Application No.393/KOLNP/2013 A
(43) Publication Date : 05/07/2013

(54) Title of the invention : ONCOLYTIC MEASLES VIRUS

(51) International classification :A61K35/76,C12N15/45,A61P35/00
(31) Priority Document No :10008726.1
(32) Priority Date :20/08/2010
(33) Name of priority country :EPO
(86) International Application No :PCT/EP2011/004200
Filing Date :19/08/2011
(87) International Publication No :WO 2012/022495
(61) Patent of Addition to Application Number :NA
Filing Date :NA
(62) Divisional to Application Number :NA
Filing Date :NA

(71)**Name of Applicant :**
1)LAUER, ULRICH, M.
Address of Applicant :RAMMERSTRASSE 43, 72072 TÜBINGEN Germany
2)BITZER, MICHAEL
3)LAMPE , JOHANNA
4)ZIMMERMANN, MARTINA
5)BERCHTOLD, SUSANNE
6)LANGE , SEBASTIAN
7)NEUBERT, WOLFGANG J.
8)BOSSOW, SASCHA
(72)**Name of Inventor :**
1)LAUER, ULRICH, M.
2)BITZER, MICHAEL
3)LAMPE, JOHANNA
4)ZIMMERMANN, MARTINA
5)BERCHTOLD, SUSANNE
6)LANGE, SEBASTIAN
7)NEUBERT, WOLFGANG J.
8)BOSSOW, SASCHA

(57) Abstract :
The present invention pertains to a pharmaceutical composition comprising a recombinant measles virus encoding a suicide gene for use in the treatment of malignant cells with primary or secondary resistances against an oncolytic measles virus without suicide gene activity. Further, the present invention pertains to a recombinant measles virus based on measles vaccine strain Schwarz encoding a suicide gene, which comprises a fusion of a cytosine deaminase, particularly yeast cytosine deaminase, and a uracil phosphoribosyltransferase, particularly yeast uracil phosphoribosyltransferase, to a method and a kit for preparing the recombinant measles virus as claimed herein.

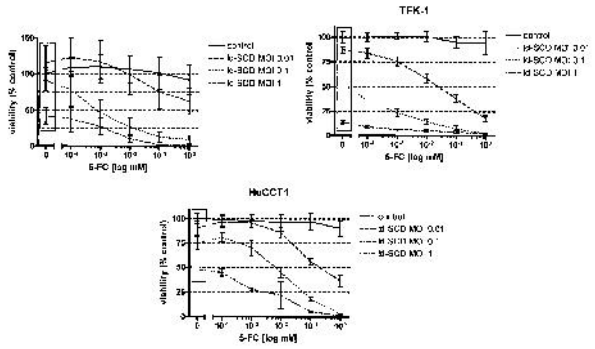

No. of Pages : 133 No. of Claims : 25

(12) PATENT APPLICATION PUBLICATION
(19) INDIA
(22) Date of filing of Application :19/02/2013
(21) Application No.415/KOLNP/2013 A
(43) Publication Date : 05/07/2013

(54) Title of the invention : ROTOR FOR ELECTRIC MOTOR

(51) International classification :H02K1/27,H02K1/22,H02K21/14
(31) Priority Document No :2010-168050
(32) Priority Date :27/07/2010
(33) Name of priority country :Japan
(86) International Application No :PCT/JP2011/066373
Filing Date :19/07/2011
(87) International Publication No :WO 2012/014728
(61) Patent of Addition to Application Number :NA
Filing Date :NA
(62) Divisional to Application Number :NA
Filing Date :NA

(71)**Name of Applicant :**
1)NISSAN MOTOR CO., LTD.
Address of Applicant :2,TAKARA-CHO,KANAGAWA-KU YOKOHAMA-SHI, KANAGAWA 221-0023,Japan
(72)**Name of Inventor :**
1)TOHRU NAKADA

(57) Abstract :
A single pole, which is composed of a pair of first permanent magnets positioned in a V-shape that opens toward the outer periphery, and a second permanent magnet positioned parallel in the circumferential direction to the open part of the V-shape, is provided with a plurality of rotor cores that are disposed in a circumferential direction, and the polarity of which alternately change. Among a plurality of pitch lines that connect a rotor shaft center and a plurality of notches that inscribe from the d axis to the q-axis of the outer periphery of a rotor core at electrical degree intervals of 1 cycle of a harmonic component of an induced voltage, using an object that exists between a line, which connects a corner on the outer periphery side of a rotor of the second permanent magnet and the rotor shaft center, and the q-axis, as a base point, a groove, having a groove center within a range sandwiched between a position shifted 1/4 of a cycle of a harmonic component in electrical degrees in the d-axis direction from said base point, and a position shifted 1/8 of a cycle of a harmonic component in electrical degrees in the q-axis direction, is formed.

No. of Pages : 27 No. of Claims : 6

(12) PATENT APPLICATION PUBLICATION
(19) INDIA
(22) Date of filing of Application :27/02/2013
(21) Application No.518/KOLNP/2013 A
(43) Publication Date : 05/07/2013

(54) Title of the invention : SOY ADHESIVES AND COMPOSITES MADE FROM THE ADHESIVES

(51) International classification :C09J189/00,B27N3/00,B27D1/00
(31) Priority Document No :61/384,603
(32) Priority Date :20/09/2010
(33) Name of priority country :U.S.A.
(86) International Application No :PCT/US2011/051819
Filing Date :15/09/2011
(87) International Publication No :WO 2012/040037
(61) Patent of Addition to Application Number :NA
Filing Date :NA
(62) Divisional to Application Number :NA
Filing Date :NA

(71)**Name of Applicant :**
1)STATE OF OREGON ACTING BY AND THROUGH THE STATE BOARD OF HIGHER EDUCATION ON BEHALF OF OREGON STATE UNIVERSITY
Address of Applicant :OFFICE OF TECHNOLOGY TRANSFER, 312 KERR ADMINISTRATION BUILDING, CORVALLIS,OR 97331-2140 U.S.A.
(72)**Name of Inventor :**
1)LI, KAICHANG

(57) Abstract :
A formaldehyde-free aqueous adhesive composition comprising (a) soy protein and (b) magnesium oxide or a mixture of magnesium oxide and magnesium hydroxide,wherein components (a) and (b) together constitute at least 50 weight percent of the composition, excluding the weight of the water.

No. of Pages : 25 No. of Claims : 44

(12) PATENT APPLICATION PUBLICATION
(21) Application No.519/KOLNP/2013 A
(19) INDIA
(22) Date of filing of Application :27/02/2013
(43) Publication Date : 05/07/2013

(54) Title of the invention : AUTOMATIC AND SEMI-AUTOMATIC SELECTION OF SERVICE OR PROCESSING PROVIDERS

(51) International classification :G06F13/00
(31) Priority Document No :12/879,148
(32) Priority Date :10/09/2010
(33) Name of priority country :U.S.A.
(86) International Application No :PCT/JP2011/070675
Filing Date :06/09/2011
(87) International Publication No :WO 2012/033215
(61) Patent of Addition to Application Number :NA
Filing Date :NA
(62) Divisional to Application Number :NA
Filing Date :NA

(71)**Name of Applicant :**
1)RICOH COMPANY ,LTD.
Address of Applicant :3-6,NAKAMAGOME 1-CHOME,OHTA-KU, TOKYO, 1438555 Japan
(72)**Name of Inventor :**
1)PIERSOL, KURT W.

(57) Abstract :
A system and method for automatic or semiautomatic selection of service or processing providers is disclosed. In one embodiment of the present invention allows the user to input a set of preferences and from that input automatically selects a service or processing provider that matches the attributes that are important the user as derived from the input preferences. In another embodiment the process is semi automatic in that the user provides a set of preferences and the present invention filters and the service or processing providers and presents a limited number of them that match the user s preferences and from which the user can select one for processing of the particular task.

No. of Pages : 110 No. of Claims : 15

(12) PATENT APPLICATION PUBLICATION
(19) INDIA
(22) Date of filing of Application :01/03/2013
(21) Application No.565/KOLNP/2013 A
(43) Publication Date : 05/07/2013

(54) Title of the invention : LARYNGEAL MASK WITH ENHANCED INSERTION

(51) International classification :A61M16/06
(31) Priority Document No :2010903758
(32) Priority Date :23/08/2010
(33) Name of priority country :Australia
(86) International Application No :PCT/AU2011/001085
Filing Date :23/08/2011
(87) International Publication No :WO 2012/024728
(61) Patent of Addition to Application Number :NA
Filing Date :NA
(62) Divisional to Application Number :NA
Filing Date :NA

(71)**Name of Applicant :**
1)BASKA Kanag
Address of Applicant :61 Woodside Avenue, Strathfield, New South Wales 2135, Australia
2)BASKA Meenakshi
(72)**Name of Inventor :**
1)BASKA Kanag
2)BASKA Meenakshi

(57) Abstract :
A laryngeal mask (10) for establishing an artificial airway in a patient comprises a mask portion (12) having a resilient conformable peripheral portion (16) shaped such that the mask forms a seal with the larynx when the mask is positioned in the laryngopharynx and an airway tube (14) connected to or formed with the mask for passing gas to the larynx when the mask is properly inserted into the laryngopharynx. The mask portion (12) including at least one region of reduced wall thickness or enhanced flexibility (20), and at least one region of increased wall thickness (22) (relative to the reduced wall thickness) or enhanced stiffness (relative to the region of enhanced flexibility), the at least one region of increased wall thickness or enhanced stiffness having a larger longitudinal extent then a longitudinal extent of the at least one region of reduced wall thickness or enhanced flexibility. The resilient conformable peripheral portion (16) may be an inflatable cuff.

No. of Pages : 97 No. of Claims : 34

(12) PATENT APPLICATION PUBLICATION
(19) INDIA
(22) Date of filing of Application :21/02/2013

(21) Application No.438/KOLNP/2013 A
(43) Publication Date : 05/07/2013

(54) Title of the invention : MULTI-HOP COMMUNICATION SYSTEM

(51) International classification :H04W40/04,H04W40/22
(31) Priority Document No :2010-190008
(32) Priority Date :26/08/2010
(33) Name of priority country :Japan
(86) International Application No :PCT/IB2011/001939
Filing Date :25/08/2011
(87) International Publication No :WO 2012/028918
(61) Patent of Addition to Application Number :NA
Filing Date :NA
(62) Divisional to Application Number :NA
Filing Date :NA

(71)**Name of Applicant :**
1)PANASONIC CORPORATION
Address of Applicant :1006,OAZA KADOMA,KADOMA-SHI,OSAKA 571-8501,Japan
(72)**Name of Inventor :**
1)YUKIO OKADA
2)JUNICHI SUZUKI

(57) Abstract :
Provided is a multi-hop communication system in which a plurality of parent terminals respectively carry out multi-hop communication together with a plurality of child terminals, and in which the child terminals establish a communication route with one parent terminal. The multi-hop communication system is characterised by the child terminals determining the parent terminal with which to establish a communication route on the basis of: the remaining number of communication routes which can be established between the each of the parent terminals and the child terminal; the number of hops in each communication route between the terminal and each of the parent terminals; and the communication quality of each communication route between the terminal and each of the parent terminals.

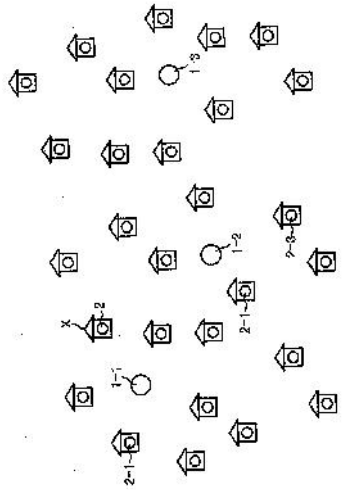

No. of Pages : 168 No. of Claims : 20

(12) PATENT APPLICATION PUBLICATION
(19) INDIA
(22) Date of filing of Application :01/03/2013
(21) Application No.563/KOLNP/2013 A
(43) Publication Date : 05/07/2013

(54) Title of the invention : MEDICAMENT DELIVERY DEVICE

(51) International classification :A61M5/24,A61M5/315
(31) Priority Document No :1050897-6
(32) Priority Date :31/08/2010
(33) Name of priority country :Sweden
(86) International Application No :PCT/SE2011/051012
Filing Date :23/08/2011
(87) International Publication No :WO 2012/030277
(61) Patent of Addition to Application Number :NA
Filing Date :NA
(62) Divisional to Application Number :NA
Filing Date :NA

(71)**Name of Applicant :**
1)SHL Group AB
Address of Applicant :Box 1240, Augustendalsvgen 19, S-131 28 Nacka Strand Sweden
(72)**Name of Inventor :**
1)HOLMQVIST, Anders
2)KARLSSON, Sebastian

(57) Abstract :
The present invention relates to a medicament delivery device comprising a housing, which housing comprises a proximal housing part and a distal housing part arranged and mounted to be movable relative each other, a drive force mechanism accommodated in said distal housing part, a container filled with medicament arranged within said proximal housing part a holding member for holding said drive force mechanism in a loaded state, an actuation member arranged to interact with said holding member for releasing the drive force mechanism from its loaded state, wherein said holding member is arranged to be moved from a disengaged position in which the holding member is disengaged from the actuation member to an engaged position in which the holding member is engaged to the actuation member by moving said housing parts in relation to each other.

No. of Pages : 28 No. of Claims : 12

(12) PATENT APPLICATION PUBLICATION
(19) INDIA
(22) Date of filing of Application :01/03/2013
(21) Application No.564/KOLNP/2013 A
(43) Publication Date : 05/07/2013

(54) Title of the invention : METHOD FOR ASSEMBLING AN ENGINE MODULE

(51) International classification :F01L1/047,B21D53/84,B23P11/02
(31) Priority Document No :10 2010 045 047.2
(32) Priority Date :10/09/2010
(33) Name of priority country :Germany
(86) International Application No :PCT/EP2011/004548
Filing Date :09/09/2011
(87) International Publication No :WO 2012/031770
(61) Patent of Addition to Application Number :NA
Filing Date :NA
(62) Divisional to Application Number :NA
Filing Date :NA

(71)**Name of Applicant :**
1)ThyssenKrupp Presta TecCenter AG
Address of Applicant :Wirtschaftspark 37, FL-9492 Eschen, Liechtenstein
(72)**Name of Inventor :**
1)WALTER, Michael
2)SCHULZE, Marian
3)SITTE, Sven

(57) Abstract :
The invention relates to a method for assembling a module for a motor vehicle engine, which module comprises at least a cylinder head cover (1) with bearing receptacles (2) and a camshaft (3) mounted in the bearing receptacles (2) wherein during the course of the assembly of the module, the camshaft (3) is constructed from a support shaft (4) and components (5) to be connected to the support shaft (4), and wherein the components (5) have through openings (6) for receiving the support shaft (4). To specify such a method in which no specially designed devices are required for holding and arranging the components to be fastened to the support shaft in the respective correct angular position, and which can be used flexibly for different camshafts which have cams with different angular positions, the following method steps are proposed: a) a support shaft (4) is provided which has local widened diameter portions (7) in the regions in which the components (4) are to be fastened and which has bearing portions (8) in the regions in which the fully assembled camshaft (3) is to be mounted in the bearing receptacles (2); b) the components (5) to be fastened to the support shaft (4) are positioned in a predetermined sequence such that the through openings (6) thereof are arranged in alignment with the bearing receptacles (2) of the cylinder head cover (1) and positioned at axial positions which do not correspond to the axial positions assumed by said components (5) on the fully assembled camshaft (3); c) the support shaft (4) is cooled and/or the components (5) are heated such that the support shaft (4) can be passed with its widened diameter portions (7) and bearing portions (8) through the bearing receptacles (2) of the cylinder head cover (1) and through the through openings (6) of the components (5); the support shaft (4) is passed through the bearing receptacles (2) and through the through openings (6) such that a bearing portion (8) of the support shaft (4) is arranged in each bearing receptacle (2) and a widened diameter portion (7) is arranged adjacent to each component (5); e) the support shaft (4) is heated and/or the components (5) are cooled such that the widened diameter portions (7) of the support shaft (4) and the through openings (6) of the components (5) assigned to the widened diameter portions (6) have a predetermined overlap; f) the components (5) are pressed successively onto the widened diameter portions (7) assigned thereto or the widened diameter portions (7) are pressed successively into the through openings (6) assigned thereto, of the components (5), wherein in each case the required angular position of each component (5) relative to the support shaft (4) is set before the pressing on or pressing in operation.

No. of Pages : 24 No. of Claims : 7

(12) PATENT APPLICATION PUBLICATION
(19) INDIA
(22) Date of filing of Application :19/02/2013
(21) Application No.419/KOLNP/2013 A
(43) Publication Date : 05/07/2013

(54) Title of the invention : FILMS CONTAINING ELECTRICALLY CONDUCTIVE POLYMERS

(51) International classification :H01B1/12
(31) Priority Document No :61/401,856
(32) Priority Date :24/08/2010
(33) Name of priority country :U.S.A.
(86) International Application No :PCT/US2011/001493
Filing Date :19/08/2011
(87) International Publication No :WO 2012/023992
(61) Patent of Addition to Application Number :NA
Filing Date :NA
(62) Divisional to Application Number :NA
Filing Date :NA

(71)**Name of Applicant :**
1)RHODIA OPERATIONS
Address of Applicant :40 RUE DE LA HAIE COQ, F-93306 AUBERVILLIERS France
2)CENTRE NATIONAL DE LA RECHERCHE SCIENTIFIQUE
(72)**Name of Inventor :**
1)BADRE , CHANTAL
2)HOUGH, LAWRENCE
3)ALSAYED, AHMED

(57) Abstract :
A polymer film, polymer gel, and polymer foam each contain an electrically conductive polymer and an ionic liquid and are each useful as a component of an electronic device.

No. of Pages : 77 No. of Claims : 35

(12) PATENT APPLICATION PUBLICATION
(19) INDIA
(22) Date of filing of Application :21/02/2013

(21) Application No.442/KOLNP/2013 A
(43) Publication Date : 05/07/2013

(54) Title of the invention : APPARATUS FOR GENERATING A DECORRELATED SIGNAL USING TRANSMITTED PHASE INFORMATION

(51) International classification :G10L19/00
(31) Priority Document No :61/376,980
(32) Priority Date :25/08/2010
(33) Name of priority country :U.S.A.
(86) International Application No :PCT/EP2011/061361
Filing Date :06/07/2011
(87) International Publication No :WO 2012/025283
(61) Patent of Addition to Application Number :NA
Filing Date :NA
(62) Divisional to Application Number :NA
Filing Date :NA

(71)**Name of Applicant :**
1)FRAUNHOFER-GESELLSCHAFT ZUR FÖRDERUNG DER ANGEWANDTEN FORSCHUNG E.V.
Address of Applicant :HANSASTRABE 27C, 80686 MÜNCHEN,Germany
(72)**Name of Inventor :**
1)KUNTZ ,ACHIM
2)DISCH, SASCHA
3)HERRE, JURGEN
4)KUCH, FABIAN
5)HILPERT , JOHANNES

(57) Abstract :
An apparatus for generating a decorrelated signal comprising a receiving unit (650) for receiving phase information, a transient separator (310; 410; 510; 610; 710; 910), a transient decorrelator (320; 420; 520; 620; 720; 920), a second decorrelator (330; 430; 530; 630; 730; 930) and a combining unit (340; 440; 540; 640; 740; 940), wherein the transient separator (310; 410; 510; 610; 710; 910) is adapted to separate an input signal into a first signal component and into a second signal component such that the first signal component comprises transient signal portions of the input signal and such that the second signal component comprises non-transient signal portions of the input signal. The transient decorrelator (320; 420; 520; 620; 720; 920) is adapted to apply the phase information received by the receiving unit (650) to a transient signal component.

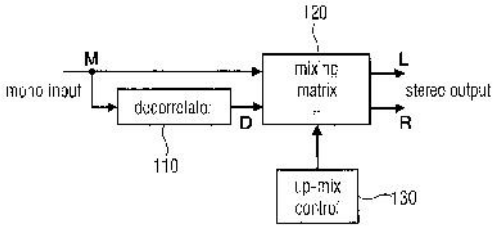

No. of Pages : 46 No. of Claims : 12

(12) PATENT APPLICATION PUBLICATION
(19) INDIA
(22) Date of filing of Application :27/02/2013
(21) Application No.523/KOLNP/2013 A
(43) Publication Date : 05/07/2013

(54) Title of the invention : MODIFIED PHYLLOSILICATE

(51) International classification :C08K3/34
(31) Priority Document No :10382216.9
(32) Priority Date :04/08/2010
(33) Name of priority country :EPO
(86) International Application No :PCT/EP2011/063406
Filing Date :03/08/2011
(87) International Publication No :WO 2012/017026
(61) Patent of Addition to Application Number :NA
Filing Date :NA
(62) Divisional to Application Number :NA
Filing Date :NA

(71)**Name of Applicant :**
1)INSTITUTO TECNOLGICO DEL EMBALAJE,TRANSPORTE Y LOG• STICA ITENE
Address of Applicant :PARQUE TECNOLGICO DE VALENCIA, C. ALBERT EINSTEIN,1, E-46980 PATERNA Spain
(72)**Name of Inventor :**
1)AUCEJO ROMERO, SUSANA
2)JORD BENEYTO, MAR• A
3)ALONSO SORIANO, JOSÉ MAR• A
4)GALLUR BLANCA, MIRIAM
5)BERMšDEZ SALDA‘A, JOSÉ MAR• A
6)HORTAL RAMOS, MERCEDES

(57) Abstract :
Polymer nanocomposite comprising: a) a polylactic polymer; and b) a modified phyllosilicate composition comprising a modifying agent which is hexadecyl trimethyl ammonium cations which are intercalated between the layers of the phyllosilicate its preparation process as well as the modified phyllosilicate composition. The polymer nanocomposite is particularly useful for packaging particularly food and drink packaging.

No. of Pages : 23 No. of Claims : 12

(12) PATENT APPLICATION PUBLICATION
(21) Application No.524/KOLNP/2013 A
(19) INDIA
(22) Date of filing of Application :27/02/2013
(43) Publication Date : 05/07/2013

(54) Title of the invention : LICENSE INSTALL SUPPORT SYSTEM, LICENSE INSTALL SUPPORT METHOD

(51) International classification :G06F21/22
(31) Priority Document No :2010-208582
(32) Priority Date :16/09/2010
(33) Name of priority country :Japan
(86) International Application No :PCT/JP2011/070912
Filing Date :07/09/2011
(87) International Publication No :WO 2012/036175
(61) Patent of Addition to Application Number :NA
Filing Date :NA
(62) Divisional to Application Number :NA
Filing Date :NA

(71)**Name of Applicant :**
1)RICOH COMPANY, LTD.
Address of Applicant :3-6,NAKAMAGOME 1-CHOME,OHTA-KU,TOKYO, 1438555 Japan
(72)**Name of Inventor :**
1)SUGIURA ,YUUKO
2)HIROKAWA, TOMOYA
3)HAN, XIAOFENG
4)IKAWA, TAKU

(57) Abstract :
A license install support method includes receiving input of a first license identifier used for receiving license data the license data being used by an electronic device for determining whether activation of a program is allowable; sending to a license source determining device connected via a network an acquisition request specifying the first license identifier for acquiring issuing source information including issuing source identification information of the license data; receiving the issuing source information returned from the license source determining device; and using a license install processing unit to acquire the license data corresponding to the first license identifier from a license management device relevant to the issuing source information included among plural license management devices connected via the network and to send the license data to the electronic device.

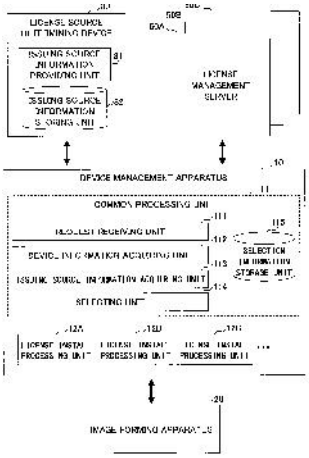

No. of Pages : 76 No. of Claims : 12

(12) PATENT APPLICATION PUBLICATION
(21) Application No.572/KOLNP/2013 A
(19) INDIA
(22) Date of filing of Application :04/03/2013
(43) Publication Date : 05/07/2013

(54) Title of the invention : METHOD OF METALIZING SURFACE OF PLASTIC SUBSTRATE AND PLASTIC ARTICLE MADE THEREFROM

(51) International classification :C23C18/20
(31) Priority Document No :201010260236.0
(32) Priority Date :19/08/2010
(33) Name of priority country :China
(86) International Application No :PCT/CN2011/078487
Filing Date :16/08/2011
(87) International Publication No :WO 2012/022255
(61) Patent of Addition to Application Number :NA
Filing Date :NA
(62) Divisional to Application Number :NA
Filing Date :NA

(71)**Name of Applicant :**
1)SHENZHEN BYD AUTO R&D COMPANY LIMITED
Address of Applicant :Part B, 1/F, Bldg#B2, Yucan Industrial Area, Lanzhu Road, Shenzhen Export Processing Zone, Shenzhen Grand Industrial Zone, Shenzhen, Guangdong 518118 P.R. China
2)BYD COMPANY LIMITED
(72)**Name of Inventor :**
1)GONG, Qing
2)ZHOU, Liang
3)MIAO, Weifeng
4)ZHANG, Xiong

(57) Abstract :
A method of metalizing the surface of a plastic substrate is provided. The plastic substrate contains a plastic material and a promoter dispersed in the plastic material. The method comprises the steps of: removing the plastic material of the plastic substrate in a predetermined area to be metalized to expose the promoter; forming a first metal layer on the exposed promoter by means of a first plating; and forming at least one second metal layer on the first metal layer by means of a second plating, in which the promoter is at least one selected from the group consisting of: $CuFe_2O_4$-δ, $Ca_{0.25}Cu_{0.75}TiO_3$-β, and TiO_2-σ, in which $0.05 \leq \delta \leq 0.8$, $0.05 \leq \beta \leq 0.5$, and $0.05 \leq \sigma \leq 1.0$. Further a plastic article obtainable by the method of metalizing the surface of a plastic substrate is also provided.

No. of Pages : 21 No. of Claims : 20

(12) PATENT APPLICATION PUBLICATION
(19) INDIA
(22) Date of filing of Application :27/02/2013
(21) Application No.528/KOLNP/2013 A
(43) Publication Date : 05/07/2013

(54) Title of the invention : COMPOSITIONS AND USES OF MATERIALS WITH HIGH ANTIMICROBIAL ACTIVITY AND LOW TOXICITY

(51) International classification	:A61K38/16,A61K38/03,A61K9/127
(31) Priority Document No	:61/376,195
(32) Priority Date	:23/08/2010
(33) Name of priority country	:U.S.A.
(86) International Application No	:PCT/US2011/048869
Filing Date	:23/08/2011
(87) International Publication No	:WO 2012/027411
(61) Patent of Addition to Application Number	:NA
Filing Date	:NA
(62) Divisional to Application Number	:NA
Filing Date	:NA

(71)**Name of Applicant :**
1)THE REGENTS OF THE UNIVERSITY OF CALIFORNIA
Address of Applicant :1111 FRANKLIN STREET, OAKLAND,CALIFORNIA 94607-5200 U.S.A.
2)AMICROBE, INC.
(72)**Name of Inventor :**
1)BEVILACQUA, MICHAEL, P.
2)BENTITEZ, DIEGO
3)DEMING,TIMOTHY, J.
4)HANSON,JARROD, A.
5)KOZIOL, LUCAS

(57) Abstract :
Improved synthetic copolypeptide antimicrobials contain cationic amino acid residues and may be based on a blocky sequence. These antimicrobials show low mammalian toxicity and may undergo directed self-assembly. The inventive synthetic copolypeptides are useful in treatment of wounds and other infections.

No. of Pages : 75 No. of Claims : 50

(12) PATENT APPLICATION PUBLICATION
(19) INDIA
(22) Date of filing of Application :27/02/2013

(21) Application No.529/KOLNP/2013 A
(43) Publication Date : 05/07/2013

(54) Title of the invention : TAMPER RESISTANT DOSAGE FORM COMPRISING AN ANIONIC POLYMER

(51) International classification :A61K9/16,A61K9/20
(31) Priority Document No :10 009 125.5
(32) Priority Date :02/09/2010
(33) Name of priority country :EPO
(86) International Application No :PCT/EP2011/004405
Filing Date :01/09/2011
(87) International Publication No :WO 2012/028318
(61) Patent of Addition to Application Number :NA
Filing Date :NA
(62) Divisional to Application Number :NA
Filing Date :NA

(71)**Name of Applicant :**
1)GRÜNENTHAL GMBH
Address of Applicant :ZIEGLERSTRASSE 6, 52078 AACHEN Germany
(72)**Name of Inventor :**
1)BARNSCHEID, LUTZ
2)SCHWIER,SEBASTIAN
3)BARTHOLOMÄUS, JOHANNES

(57) Abstract :
The invention relates to a pharmaceutical dosage form exhibiting a breaking strength of at least 500 N said dosage form containing a pharmacologically active ingredient(A); a physiologically acceptable polymer (B) obtainable by polymerization of a monomer composition comprising an ethylenically unsaturated monomer bearing an anionic functional group in protonated form or a physiologically acceptable salt thereof; a polyalkylene oxide (C) having a weight average molecular weight of at least 200 000 g/mol wherein the content of the polyalkylene oxide (C) is at least 20 wt. % based on the total weight of the dosage form; wherein the pharmacologically active ingredient (A) is present in a controlled release matrix comprising the polymer (B) and the polyalkylene oxide (C).

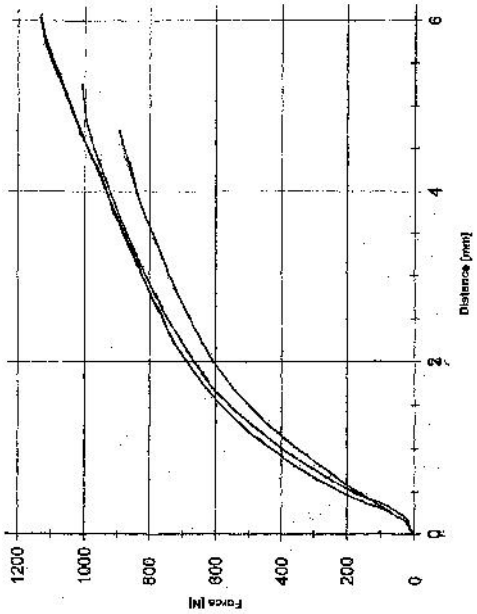

No. of Pages : 75 No. of Claims : 13

(12) PATENT APPLICATION PUBLICATION
(19) INDIA
(22) Date of filing of Application :04/03/2013
(21) Application No.577/KOLNP/2013 A
(43) Publication Date : 05/07/2013

(54) Title of the invention : COMBINATION OF COMPOUNDS FOR TREATING OR PREVENTING SKIN DISEASES

(51) International classification :A61K9/00,A61K31/00,A61K31/20
(31) Priority Document No :61/344,499
(32) Priority Date :06/08/2010
(33) Name of priority country :U.S.A.
(86) International Application No :PCT/EP2011/063528
Filing Date :05/08/2011
(87) International Publication No :WO 2012/017077
(61) Patent of Addition to Application Number :NA
Filing Date :NA
(62) Divisional to Application Number :NA
Filing Date :NA

(71)**Name of Applicant :**
1)GALDERMA RESEARCH & DEVELOPMENT
Address of Applicant :2400 Route Des Colles, Les Templiers, F-06410 Biot France
(72)**Name of Inventor :**
1)CHAPPUIS, Jean-Paul
2)AT, Emmanuelle

(57) Abstract :
The invention relates to a combination of compounds for treating skin diseases and particularly rosacea and ocular rosacea. It is the combination of a compound selected from azelaic acid and salts thereof with a compound of the alpha-1 or alpha-2 adrenergic receptor agonist family. The invention also relates to a product in the form of a kit containing: (a) a first composition comprising a compound selected from azelaic acid and salts thereof, and (b) a second composition different from the first one and comprising a compound of the alpha-1 or alpha-2 adrenergic receptor agonist family, as a combination product for application thereof as a medicament for treating and/or preventing skin diseases and in particular rosacea and ocular rosacea, wherein said first and second compositions can be applied simultaneously, separately or with a time delay.

No. of Pages : 28 No. of Claims : 27

(12) PATENT APPLICATION PUBLICATION
(19) INDIA
(22) Date of filing of Application :04/03/2013
(21) Application No.578/KOLNP/2013 A
(43) Publication Date : 05/07/2013

(54) Title of the invention : COMMUNICATION SYSTEM, MOBILE DEVICE, AND NETWORK APPARATUS

(51) International classification :H04W48/18,H04W48/02,H04W88/06
(31) Priority Document No :2010-181169
(32) Priority Date :12/08/2010
(33) Name of priority country :Japan
(86) International Application No :PCT/JP2011/068311
Filing Date :10/08/2011
(87) International Publication No :WO 2012/020809
(61) Patent of Addition to Application Number :NA
Filing Date :NA
(62) Divisional to Application Number :NA
Filing Date :NA

(71)**Name of Applicant :**
1)NTT DOCOMO, INC.
Address of Applicant :11-1, Nagatacho 2-chome, Chiyoda-ku, Tokyo 1006150 Japan
(72)**Name of Inventor :**
1)AOYAGI, Kenichiro
2)SUGANO, Kiminobu
3)NAKAMURA, Yuichiro

(57) Abstract :
The present invention prevents a mobile device from transitioning back to a first wireless communication system when access restrictions in the first wireless communication system have caused the device to transition to a different wireless communication system. The communication system of the present invention includes a mobile device (300) capable of connecting to a LTE system and 3G system, and an RNC (210) that controls the transitioning of the mobile device (300) between the LTE system and 3G system. When the mobile device (300) sends the RNC (210) a request to connect to the 3G system instead of the LTE system, in response the establishment of restrictions restricting the communication of the mobile device (300) in the LTE system, transition information indicating a transition from the LTE system is included in the request to connect. If the RNC (210) receives transition information from the mobile device, the RNC (210) prevents the mobile device (300) from transitioning to the LTE system.

No. of Pages : 27 No. of Claims : 9

(12) PATENT APPLICATION PUBLICATION
(19) INDIA
(22) Date of filing of Application :22/02/2013
(21) Application No.463/KOLNP/2013 A
(43) Publication Date : 05/07/2013

(54) Title of the invention : QUICKLY RECONFIGURABLE CORE BARREL HEAD ASSEMBLY

(51) International classification :E21B25/00
(31) Priority Document No :NAL
(32) Priority Date :20/01/2011
(33) Name of priority country :Argentina
(86) International Application No :PCT/CA2010/001358
Filing Date :30/08/2010
(87) International Publication No :WO 2012/027817
(61) Patent of Addition to Application Number :NA
Filing Date :NA
(62) Divisional to Application Number :NA
Filing Date :NA

(71)**Name of Applicant :**
1)ATLAS COPCO CANADA INC
Address of Applicant :30 MONTROSE, DOLLARD-DES-ORMEAUX, QUEBEC H9B 3J9 Canada
(72)**Name of Inventor :**
1)SALVADOR, PATRICK
2)GROULX, DENNIS
3)LAMBERT, PAUL

(57) Abstract :
A core barrel head assembly positionable within a drill string of a drilling apparatus. The core barrel head assembly comprises an upper latch body having a latch assembly for engageably latching the drill string, and a reduced diametric portion below the latch assembly for receiving a seal member. The reduced diametric portion has a lower coupling portion on a bottom portion thereof. The head assembly also includes a lower latch body comprising an upper coupling portion on a top portion thereof, as well as a coupler for removably coupling the upper latch body to the lower latch body. The seal member is installable on and removable from the reduced diametric portion upon uncoupling the upper latch body from the lower latch body. The head assembly is quickly reconfigurable between surface and pump in/underground configurations. Core barrel outer tube components also do not require reconfiguring between these two configurations.

No. of Pages : 16 No. of Claims : 12

(12) PATENT APPLICATION PUBLICATION
(19) INDIA
(22) Date of filing of Application :27/02/2013

(21) Application No.533/KOLNP/2013 A
(43) Publication Date : 05/07/2013

(54) Title of the invention : COMPOUND COMPOSITION FOR INHALATION USED FOR TREATING ASTHMA

(51) International classification	:A61K31/137,A61K31/135,A61K31/4704
(31) Priority Document No	:201010502339.3
(32) Priority Date	:28/09/2010
(33) Name of priority country	:China
(86) International Application No	:PCT/CN2011/070883
Filing Date	:01/02/2011
(87) International Publication No	:WO 2012/041031
(61) Patent of Addition to Application Number	:NA
Filing Date	:NA
(62) Divisional to Application Number	:NA
Filing Date	:NA

(71)**Name of Applicant :**
1)INTECH BIOPHARM LTD.
Address of Applicant :11F NO.392,SEC.1,NEIHU ROAD, TAIPEI,TAIWAN China
(72)**Name of Inventor :**
1)WU,WEI-HSIU

(57) Abstract :
An inhaled pharmaceutical composition contains primary active ingredients of beta2- agonist and corticosteroids. The pharmaceutical compositions disclosed in the present invention are to be inhaled by a patient when needed as a reliever, or administrated in an eccentric way as a controller. The eccentric way control therapy could create a low blood concentration period during the day and minimize the acute tolerance phenomenon (or so called tachyphylaxis) for bronchodilator - beta2-agonists in treating asthma or other obstructive respiratory disorders.

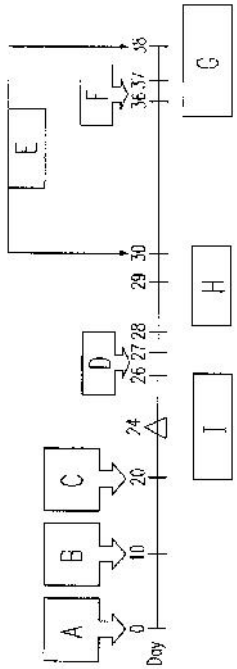

No. of Pages : 31 No. of Claims : 10

(12) PATENT APPLICATION PUBLICATION
(19) INDIA
(22) Date of filing of Application :28/02/2013
(21) Application No.534/KOLNP/2013 A
(43) Publication Date : 05/07/2013

(54) Title of the invention : CARDIAC VALVE SUPPORT STRUCTURE

(51) International classification :A61F2/24,A61M31/00,A61M29/02
(31) Priority Document No :61/379235
(32) Priority Date :01/09/2010
(33) Name of priority country :U.S.A.
(86) International Application No :PCT/US2011/050232
Filing Date :01/09/2011
(87) International Publication No :WO 2012/031141
(61) Patent of Addition to Application Number :NA
Filing Date :NA
(62) Divisional to Application Number :NA
Filing Date :NA

(71)**Name of Applicant :**
1)MVALVE TECHNOLOGIES LTD.
Address of Applicant :91 MEDINAT HAYEHUDIM, HERZLIYA 4676673 Israel
(72)**Name of Inventor :**
1)BUCHBINDER, MAURICE
2)LOGAN,JULIE,A.

(57) Abstract :
Cardiac valu supports and their methods of use.

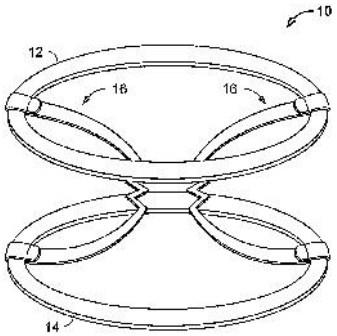

No. of Pages : 44 No. of Claims : 34

(12) PATENT APPLICATION PUBLICATION
(19) INDIA
(22) Date of filing of Application :04/03/2013
(21) Application No.583/KOLNP/2013 A
(43) Publication Date : 05/07/2013

(54) Title of the invention : MOBILE UNIT, COMMUNICATION CONTROL DEVICE, AND COMMUNICATION CONTROL METHOD

(51) International classification :H04M1/00,H04M3/42,H04W48/10
(31) Priority Document No :2010-180643
(32) Priority Date :11/08/2010
(33) Name of priority country :Japan
(86) International Application No :PCT/JP2011/068309
Filing Date :10/08/2011
(87) International Publication No :WO 2012/020807
(61) Patent of Addition to Application Number :NA
Filing Date :NA
(62) Divisional to Application Number :NA
Filing Date :NA

(71)**Name of Applicant :**
1)NTT DOCOMO, INC.
Address of Applicant :11-1, Nagatacho 2-chome, Chiyoda-ku, Tokyo 1006150 Japan
(72)**Name of Inventor :**
1)AOYAGI, Kenichiro
2)IWAMURA, Mikio
3)HAPSARI, Wuri Andarmawanti

(57) Abstract :
Provided are a mobile unit, a communication control device, and a communication control method that make it possible to control incoming calls in response to the conditions of wireless communication systems, even when the methods of prioritizing incoming calls vary thereamong. A mobile unit (300) is able to connect wirelessly to an LTE system, which issues notifications of call priority information indicating incoming call processing priority, and to a 3G system, which reports access class restricting information that establishes incoming call restrictions in response to the access classes of incoming calls. When an incoming call is a priority call, having priority call information indicating processing priority greater than that of other calls, and has restrictions established by access class restricting information, the mobile unit (300) connects to the 3G system (20), regardless of access class regulating information, and processes the incoming call.

No. of Pages : 33 No. of Claims : 8

(12) PATENT APPLICATION PUBLICATION
(21) Application No.584/KOLNP/2013 A
(19) INDIA
(22) Date of filing of Application :04/03/2013
(43) Publication Date : 05/07/2013

(54) Title of the invention : HIGH STRENGTH STEEL SHEET AND METHOD FOR MANUFACTURING THE SAME

(51) International classification :C23C8/14,C21D9/46,C22C38/00
(31) Priority Document No :NA
(32) Priority Date :NA
(33) Name of priority country :NA
(86) International Application No :PCT/JP2010/067611
Filing Date :30/09/2010
(87) International Publication No :WO 2012/042676
(61) Patent of Addition to Application Number :NA
Filing Date :NA
(62) Divisional to Application Number :NA
Filing Date :NA

(71)**Name of Applicant :**
1)JFE STEEL CORPORATION
Address of Applicant :2-3, Uchisaiwai-cho 2-chome, Chiyoda-ku, Tokyo 100-0011, Japan
(72)**Name of Inventor :**
1)Yusuke FUSHIWAKI
2)Yoshitsugu SUZUKI

(57) Abstract :
Provided are: a high-strength steel sheet having superior chemical conversion treatability and post-electrodeposition corrosion resistance even if the amount of contained Si is large; and a method for producing the high-strength steel sheet. A steel sheet containing, by mass%, 0.01- 0.18% C, 0.4-2.0% Si, 1.0-3.0% Mn, 0.001-1.0% Al, 0.005-0.060% P, and S≤0.01%, the remainder comprising Fe and unavoidable impurities, is continuously annealed, during which the temperature region inside the annealing furnace of at least 750°C is caused to have a dew point within the ambient atmosphere of no greater than -40°C.

No. of Pages : 47 No. of Claims : 4

(12) PATENT APPLICATION PUBLICATION
(21) Application No.428/KOLNP/2013 A
(19) INDIA
(22) Date of filing of Application :19/02/2013
(43) Publication Date : 05/07/2013

(54) Title of the invention : CHILD-RESISTANT AND SENIOR-FRIENDLY ECO-FRIENDLY PILL DISPENSER BLISTER PACKAGE

(51) International classification :B65D83/04
(31) Priority Document No :12/804,311
(32) Priority Date :19/07/2010
(33) Name of priority country :U.S.A.
(86) International Application No :PCT/US2011/001265
Filing Date :18/07/2011
(87) International Publication No :WO 2012/011941
(61) Patent of Addition to Application Number :NA
Filing Date :NA
(62) Divisional to Application Number :NA
Filing Date :NA

(71)**Name of Applicant :**
1)KEYSTONE FOLDING BOX CO.
Address of Applicant :367 VERONA AVENUE, NEWARK,NJ 07104 U.S.A.
(72)**Name of Inventor :**
1)WESTON, MICHAEL, H.
2)SMITH, FRANK EDWADR

(57) Abstract :
A blister and package system made of a blister card and an outer package with unique interacting locking mechanisms. The blister card or strip is inserted into the outer package or sleeve and locks immediately without having to further process the outer package or the blister card or strip. The user is able to expose the blisters from the outer package by disengaging the lock. The blister card or strip includes a formable, pliable sheet material, into which one or more individual cavities or blisters are formed . The separated cavities are loaded with product and sealed with one or more layers of puncturable or tearable sheet material such as aluminum foil. The blister card or strip contains a plastic rivet assembly that forms an interference mechanism. The rivet is trapped by an internally formed panel and stopped by a catch flap included in the outer package.

No. of Pages : 58 No. of Claims : 40

(12) PATENT APPLICATION PUBLICATION
(21) Application No.546/KOLNP/2013 A
(19) INDIA
(22) Date of filing of Application :28/02/2013
(43) Publication Date : 05/07/2013

(54) Title of the invention : METHOD AND APPARATUS FOR VARYING ADAPTIVELY PULSE INTERVAL IN NMR-BASED WATER CONTENT MEASUREMENT

(51) International classification :G01R33/46,G01N24/08
(31) Priority Document No :20105916
(32) Priority Date :31/08/2010
(33) Name of priority country :Finland
(86) International Application No :PCT/FI2011/050754
Filing Date :30/08/2011
(87) International Publication No :WO 2012/028786
(61) Patent of Addition to Application Number :NA
Filing Date :NA
(62) Divisional to Application Number :NA
Filing Date :NA

(71)**Name of Applicant :**
1)METSO AUTOMATION OY
Address of Applicant :VANHA PORVOONTIE 229, FI-01380 VANTAA Finland
(72)**Name of Inventor :**
1)VIITANEN, VELI-PEKKA
2)VIRTANEN, SAMI

(57) Abstract :
The invention relates to a NMR method for determining moisture content of a sample (1),in which method a sample (1) is objected to a magnetic DC field the sample (1) under magnetic DC field is objected to a sequence (2) of excitation pulses (3) in RF frequency with pulse interval (T3) for exciting hydrogen nuclei and NMR signal of the excited hydrogen nuclei is measured. In accordance with the invention spin lattice relaxation time (Tl) is estimated for the sample (1), and pulse interval (T3) is adjusted longer than the estimated spin lattice relaxation time (Tl).

No. of Pages : 15 No. of Claims : 19

(12) PATENT APPLICATION PUBLICATION
(19) INDIA
(22) Date of filing of Application :28/02/2013

(21) Application No.547/KOLNP/2013 A
(43) Publication Date : 05/07/2013

(54) Title of the invention : CONTROL METHOD OF WASHING MACHINE

(51) International classification :D06F35/00,D06F39/08
(31) Priority Document No :10-2010-0090798
(32) Priority Date :15/09/2010
(33) Name of priority country :Republic of Korea
(86) International Application No :PCT/KR2011/006815
Filing Date :15/09/2011
(87) International Publication No :WO 2012/036485
(61) Patent of Addition to Application Number :NA
Filing Date :NA
(62) Divisional to Application Number :NA
Filing Date :NA

(71)**Name of Applicant :**
1)LG ELECTRONICS INC.
Address of Applicant :20,YEOUIDO-DONG,YEONGDEUNGPO-GU. SEOUL 150-721 Republic of Korea
(72)**Name of Inventor :**
1)KIM,PYOUNGHWAN
2)KIM, HYUNGYONG
3)PARK, SEOGKYU
4)OH, YOUNGKEE
5)LEE, DEUGHEE
6)PARK, EUNJIN
7)KWON TAEHYOK

(57) Abstract :
Disclosed herein is a control method of a washing machine which minimizes damage to laundry to be washed. The control method includes executing a washing cycle to wash laundry to be washed by supplying wash water, dissolving detergent in wash water and washing the laundry,executing a rinsing cycle to rinse the laundry by draining wash water ,spin -drying the laundry , and rinsing the laundry , and executing a spin drying cycle to spin- dry the laundry by draining wash water and spin- drying the laundry, wherein the dissolving of the detergent is carried out at a water level lower than a predetermined reference water level.

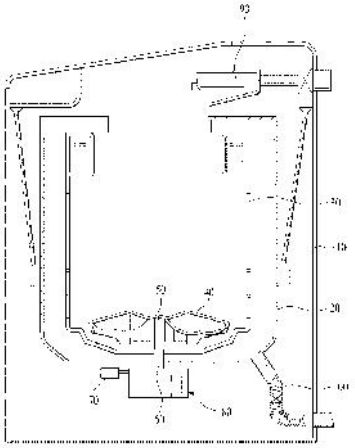

No. of Pages : 35 No. of Claims : 11

(12) PATENT APPLICATION PUBLICATION
(21) Application No.591/KOLNP/2013 A
(19) INDIA
(22) Date of filing of Application :04/03/2013
(43) Publication Date : 05/07/2013

(54) Title of the invention : REAL-TIME DETERMINATION METHOD FOR TEMPERATURE AND GEOMETRY OF A HOT METAL STRIP IN A FINISHING TRAIN

(51) International classification :B21B37/16,B21B37/28,G05B13/02
(31) Priority Document No :10177104.6
(32) Priority Date :16/09/2010
(33) Name of priority country :EPO
(86) International Application No :PCT/EP2011/065285
Filing Date :05/09/2011
(87) International Publication No :WO 2012/034884
(61) Patent of Addition to Application Number :NA
Filing Date :NA
(62) Divisional to Application Number :NA
Filing Date :NA

(71)**Name of Applicant :**
1)SIEMENS AKTIENGESELLSCHAFT
Address of Applicant :Wittelsbacherplatz 2, 80333 München, Germany
(72)**Name of Inventor :**
1)KURZ, Matthias
2)WEINZIERL, Klaus

(57) Abstract :
At the latest when strip points (6) of a hot metal strip (5) enter a finishing train comprising a plurality of roll stands (F1...F6), a starting temperature (T1) and a starting geometry (G1) are captured for each strip point (6) entering and are assigned to the respective strip point (6) as the actual temperature (T2) and actual geometry (G2). The strip points (6) are tracked as they pass through the finishing train. The hot strip (5) is subjected to temperature and geometry influences (δT, δG) in the finishing train. By means of a model (9) and using the actual temperatures (T2), the actual geometry (G2) and the temperature and geometry influences (δT, δG), taking into account the tracking, new actual temperatures (T2) and new actual geometries (G2) of the captured strip points (6) are determined in real time and assigned to the detected strip points (6) such that they are available at any time during the passage of the strip points (6) through the finishing train. After the strip points (6) exit the finishing train, the final geometries (G3) thereof are captured. Using the respective captured final geometry (G3) and the actual geometry (G2), correction factors (Sk) are determined for modelling the roll stands (F1...F6) by means of the model (9). In addition, functional dependencies of the actual geometries (G2) on the correction factors (Sk) are determined by means of the model (9) such that the actual geometries (G2) of the strip points (6) which have already entered the finishing train can be corrected based on the correction factors (Sk) while passing through the finishing train.

No. of Pages : 59 No. of Claims : 16

(12) PATENT APPLICATION PUBLICATION
(19) INDIA
(22) Date of filing of Application :28/02/2013
(21) Application No.548/KOLNP/2013 A
(43) Publication Date : 05/07/2013

(54) Title of the invention : METHOD FOR PRODUCING FERTILIZERS CONTAINING DISPERSED MICRONIZED SULPHUR

(51) International classification :C05D9/00,C01B17/10,C05G5/00
(31) Priority Document No :61/377,509
(32) Priority Date :27/08/2010
(33) Name of priority country :U.S.A.
(86) International Application No :PCT/IB2011/002699
Filing Date :26/08/2011
(87) International Publication No :WO 2012/025832
(61) Patent of Addition to Application Number :NA
Filing Date :NA
(62) Divisional to Application Number :NA
Filing Date :NA

(71)**Name of Applicant :**
1)CCR TECHNOLOGIES, LTD.
Address of Applicant :5, RICHARD WAY, S.E. SUITE 300, CALGARY, ALBERTA T3E 7M8, Canada
(72)**Name of Inventor :**
1)RAYMOND G. F. ABRY
2)TODD BEASLEY
3)RICHARD LYLE JOHNSON
4)JIN KWON TAK

(57) Abstract :
A method of producing a fertilizer composition containing micronized sulphur wherein elemental sulphur is dissolved in anhydrous or hydrous ammonia to form an ammonia/sulphur solution and the ammonia/sulphur solution is reacted with an acidic component having at least one plant growth constituent to simultaneously form a sulphur composition comprising a sulphur compound and micronized sulphur. The thus formed fertilizer composition is dried and can be formed into various shapes such as pellets prills etc.

No. of Pages : 16 No. of Claims : 11

(12) PATENT APPLICATION PUBLICATION
(19) INDIA
(22) Date of filing of Application :28/02/2013
(21) Application No.549/KOLNP/2013 A
(43) Publication Date : 05/07/2013

(54) Title of the invention : CUTTING TOOL AND CUTTING INSERT THEREFOR

(51) International classification :B23B29/04
(31) Priority Document No :208826
(32) Priority Date :20/10/2010
(33) Name of priority country :Israel
(86) International Application No :PCT/IL2011/000772
Filing Date :04/10/2011
(87) International Publication No :WO 2012/052984
(61) Patent of Addition to Application Number :NA
Filing Date :NA
(62) Divisional to Application Number :NA
Filing Date :NA

(71)**Name of Applicant :**
1)ISCAR LTD.,
Address of Applicant :P.O. BOX 11, 24959 TEFEN Israel
(72)**Name of Inventor :**
1)HECHT, GIL

(57) Abstract :
In a cutting tool having an indexable cutting insert (20) with four cutting portions (26a, 26b , 26c, 26d), the cutting insert is securable within a holder portion in four index positions by means of a fastener. The cutting insert has two opposing end surfaces (22) with a peripheral side surface (24) and a central axis (c) extending therebetween, the peripheral side surface having exactly four abutment zones (28a, 28b,28c,28d). The insert holder (42) has a holder portion (46) and a body portion (48), the holder portion having a sidewall surface with a first second and third reaction zone. The cutting insert is divided into four imaginary quadrants about its central axis and the four abutment zones are located entirely in two of the four imaginary quadrants , and for each index position, three of the four abutment zones are in clamping contact with the three reaction zones.

No. of Pages : 20 No. of Claims : 33

(12) PATENT APPLICATION PUBLICATION
(19) INDIA
(22) Date of filing of Application :05/03/2013
(21) Application No.594/KOLNP/2013 A
(43) Publication Date : 05/07/2013

(54) Title of the invention : SCANNING METHOD AND DEVICE, AND REVERSE SCANNING METHOD AND DEVICE

(51) International classification :H04N7/50
(31) Priority Document No :201010505932.3
(32) Priority Date :30/09/2010
(33) Name of priority country :China
(86) International Application No :PCT/CN2011/074558
Filing Date :24/05/2011
(87) International Publication No :WO 2011/137814
(61) Patent of Addition to Application Number :NA
Filing Date :NA
(62) Divisional to Application Number :NA
Filing Date :NA

(71)**Name of Applicant :**
1)HUAWEI TECHNOLOGIES CO., LTD.
Address of Applicant :Huawei Administration Building, Bantian, Longgang District, Shenzhen, Guangdong 518129, P.R. China
(72)**Name of Inventor :**
1)YANG, Haitao
2)ZHOU, Jiantong

(57) Abstract :
A scanning method and device, reverse scanning method and device in coding and decoding technology are provided. Wherein the scanning method includes: receiving quantized transform coefficients of the current block; obtaining the prediction direction of the current block; searching according to the prediction direction the scanning sequence corresponding to the prediction direction of the current block from the mapping relation table of the prediction direction and the scanning sequence, wherein there is at least one scanning sequence which corresponds to at least 2 prediction directions in the mapping relation table of the prediction direction and the scanning sequence and performing scanning processing to the coefficients in the scanning sequence corresponding to the prediction direction of the current block. Use of the solutions of the present invention enables decrease of the number of the scanning sequences used in coding and decoding and reduction of the system complexity of the codec system.

No. of Pages : 31 No. of Claims : 13

(12) PATENT APPLICATION PUBLICATION
(19) INDIA
(22) Date of filing of Application :05/03/2013
(21) Application No.595/KOLNP/2013 A
(43) Publication Date : 05/07/2013

(54) Title of the invention : LIFTING STRUCTURE OF TOWER CRANE, HYDRAULIC SYSTEM OF LIFTING STRUCTURE, AND LIFTING METHOD

(51) International classification :B66C13/20,B66C23/28,B66C23/62
(31) Priority Document No :201110050632.5
(32) Priority Date :02/03/2011
(33) Name of priority country :China
(86) International Application No :PCT/CN2011/078540
Filing Date :17/08/2011
(87) International Publication No :WO 2012/116537
(61) Patent of Addition to Application Number :NA
Filing Date :NA
(62) Divisional to Application Number :NA
Filing Date :NA

(71)**Name of Applicant :**
1)ZOOMLION HEAVY INDUSTRY SCIENCE AND TECHNOLOGY CO. LTD.
Address of Applicant :NO.361 Yinpen South Road, Yuelu District, Changsha, Hunan 410013 China
2)CHINA MAJOR BRIDGE ENGINEERING CO. LTD.
(72)**Name of Inventor :**
1)YU, Lekang
2)ZHANG, Yiliang
3)MAO, Kuai
4)HU, Shenglei
5)LIANG, Sha
6)LI, Bai
7)WU, Mao
8)LI, Yuli
9)CHEN, Longjian
10)ZHOU, Hanlin

(57) Abstract :
Disclosed are a lifting structure of a tower crane, a hydraulic system of the lifting structure, and a lifting method for the tower crane. The hydraulic system of the lifting structure of the tower crane comprises a plurality of oil cylinders (15), wherein each oil cylinder comprises a forward branch working oil-way and a reverse branch working oil way. Arranged on the forward branch working oil way of each oil cylinder is a forward governor valve for adjusting the forward flow rate of the hydraulic oil. Arranged on the reverse branch working oil way of each oil cylinder is a reverse governor valve for adjusting the reverse flow rate of the hydraulic oil. The lifting structure of the tower crane comprises the hydraulic system of the lifting structure. In the lifting method for the tower crane the forward governor valve and the reverse governor valve on each oil cylinder are used to control the forward and reverse flow rate of the hydraulic oil in the branch working oil ways of each oil cylinder and the synchronization accuracy of each cylinder and synchronized lifting of each of the cylinders is allowed by keeping equal the forward and reverse flow rate of the hydraulic oil in the branch working oil ways of each oil cylinder and by the synchronized lifting of each of the cylinders.

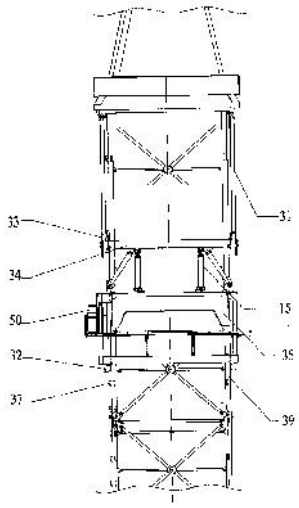

No. of Pages : 26 No. of Claims : 15

(12) PATENT APPLICATION PUBLICATION
(19) INDIA
(22) Date of filing of Application :24/12/2012
(21) Application No.4107/KOLNP/2012 A
(43) Publication Date : 05/07/2013

(54) Title of the invention : METHOD FOR PLANNING AND/OR CONTROLLING AN ENERGY OUTPUT TO A CONSUMER AND/OR AN ENERGY SUPPLY TO AN ENERGY DISTRIBUTION NETWORK

(51) International classification :H02J3/14
(31) Priority Document No :A 1210/2010
(32) Priority Date :16/07/2010
(33) Name of priority country :Austria
(86) International Application No :PCT/AT2011/000296
Filing Date :08/07/2011
(87) International Publication No :WO 2012/006644
(61) Patent of Addition to Application Number :NA
Filing Date :NA
(62) Divisional to Application Number :NA
Filing Date :NA

(71)**Name of Applicant :**
1)ATB AUTOMATISIERUNGSTECHNIK GMBH & CO KG
Address of Applicant :LINZERBERG 20, A-4210 GALLNEUKIRCHEN Austria
(72)**Name of Inventor :**
1)EDTMAIR, JOACHIM
2)BERNHARD,WOLFGANG

(57) Abstract :
The invention relates to a method for planning and/or controlling an energy output to a consumer (2) and/or an energy supply to an energy distribution network (1). According to said method, first messages relating to expected current and/or planned tariffs and/or network loads, and relating to a value for a probability of the input of the related tariffs and/or network loads are created and sent by a first energy supplier.

No. of Pages : 30 No. of Claims : 15

(12) PATENT APPLICATION PUBLICATION
(19) INDIA
(22) Date of filing of Application :24/12/2012
(21) Application No.4108/KOLNP/2012 A
(43) Publication Date : 05/07/2013

(54) Title of the invention : MOBILE COMMUNICATION METHOD

(51) International classification :H04W 24/10
(31) Priority Document No :2010-141111
(32) Priority Date :21/06/2010
(33) Name of priority country :Japan
(86) International Application No :PCT/JP2011/064175
Filing Date :21/06/2011
(87) International Publication No :WO 2011/162263
(61) Patent of Addition to Application Number :NA
Filing Date :NA
(62) Divisional to Application Number :NA
Filing Date :NA

(71)**Name of Applicant :**
1)NTT DOCOMO, INC.
Address of Applicant :11-1, NAGATACHO 2-CHOME, CHIYODA-KU, TOKYO 100-6150 Japan
(72)**Name of Inventor :**
1)TAKAHASHI, HIDEAKI
2)HAPSARI, WURI ANDARMAWANTI
3)UMESH, ANIL
4)IWAMURA, MIKIO

(57) Abstract :
A mobile communication method according to the present invention includes a step of transmitting, by a mobile management node MME, Measurement Configuration #1 for instructing to measure and report a desired radio quality to a radio base station eNB#1 that manages a cell #1 when it is detected that a mobile station UE has moved into the cell #1 in a measurement-target area, and a step of transmitting, by the radio base station eNB#1, RRC Connection Reconfiguration including the Measurement Configuration #1 to the mobile station UE.

No. of Pages : 29 No. of Claims : 5

(12) PATENT APPLICATION PUBLICATION
(19) INDIA
(22) Date of filing of Application :24/12/2012
(21) Application No.4109/KOLNP/2012 A
(43) Publication Date : 05/07/2013

(54) Title of the invention : MOBILE COMMUNICATION METHOD

(51) International classification :H04W 24/10
(31) Priority Document No :2010-141111
(32) Priority Date :21/06/2010
(33) Name of priority country :Japan
(86) International Application No :PCT/JP2011/064174
Filing Date :21/06/2011
(87) International Publication No :WO 2011/162262
(61) Patent of Addition to Application Number :NA
Filing Date :NA
(62) Divisional to Application Number :NA
Filing Date :NA

(71)**Name of Applicant :**
1)NTT DOCOMO, INC.
Address of Applicant :11-1, NAGATACHO 2-CHOME, CHIYODA-KU, TOKYO 1006150 Japan
(72)**Name of Inventor :**
1)TAKAHASHI, HIDEAKI
2)HAPSARI, WURI ANDARMAWANTI
3)UMESH, ANIL
4)IWAMURA, MIKIO

(57) Abstract :
A mobile communication method according to the present invention includes a step of transmitting, by a mobile management node MME, Measurement Configuration #1 for instructing to measure and report a desired radio quality to a radio base station eNB#l that manages a cell #1 when it is detected that a mobile station UE has moved into the cell #1 that lies inside a measurement-target area, and a step of transmitting, by the radio base station eNB#1 RRC Connection Reconfiguration including the Measurement Configuration #1 to the mobile station UE.

No. of Pages : 30 No. of Claims : 4

(12) PATENT APPLICATION PUBLICATION
(19) INDIA
(22) Date of filing of Application :20/02/2013
(21) Application No.431/KOLNP/2013 A
(43) Publication Date : 05/07/2013

(54) Title of the invention : MEDICAL SEPARATING DEVICE

(51) International classification :A61M1/36,B01D15/20,G01N30/56
(31) Priority Document No :10 2010 049 790.8
(32) Priority Date :29/10/2010
(33) Name of priority country :Germany
(86) International Application No :PCT/EP2011/005218
Filing Date :18/10/2011
(87) International Publication No :WO 2012/055500
(61) Patent of Addition to Application Number :NA
Filing Date :NA
(62) Divisional to Application Number :NA
Filing Date :NA

(71)**Name of Applicant :**
1)FRESENIUS MEDICAL CARE DEUTSCHLAND GMBH
Address of Applicant :ELSE-KROENER-STR.1, 61352 BAD HOMBURG Germany
(72)**Name of Inventor :**
1)LEINENBACH, HANS-PETER
2)GERNER, FRANZ-JOSEF
3)KUHN, STEFAN
4)SCHINZEL, EKKEHARD
5)PRIESNITZ, PATRICK

(57) Abstract :
The invention relates to medical separating devices, to methods for producing same and to the use thereof, wherein the housing of the separating devices has a lateral filler neck which is mounted tangentially on the housing and can be used to charge a separating medium.

No. of Pages : 29 No. of Claims : 15

(12) PATENT APPLICATION PUBLICATION
(19) INDIA
(22) Date of filing of Application :01/03/2013
(21) Application No.550/KOLNP/2013 A
(43) Publication Date : 05/07/2013

(54) Title of the invention : METHOD AND APPARATUS FOR CONTROLLING START-UP OF INTERNAL COMBUSTION ENGINE

(51) International classification :F02D45/00,F02D41/06,F02D43/00
(31) Priority Document No :2010-290138
(32) Priority Date :27/12/2010
(33) Name of priority country :Japan
(86) International Application No :PCT/JP2011/080215
Filing Date :27/12/2011
(87) International Publication No :WO 2012/091014
(61) Patent of Addition to Application Number :NA
Filing Date :NA
(62) Divisional to Application Number :NA
Filing Date :NA

(71)**Name of Applicant :**
1)NISSAN MOTOR CO., LTD.
Address of Applicant :2, Takara-cho, Kanagawa-ku Yokohama-shi, Kanagawa 221-0023, Japan
(72)**Name of Inventor :**
1)YASUDA Hajime
2)SATOU Kenichi
3)TAKAHASHI Hideaki
4)MURAKI Hirotada
5)ITOYAMA Hiroyuki
6)SHIBATA Tohru
7)SHIMASAKI Susumu

(57) Abstract :
An internal combustion engine (1) is equipped with a throttle (23) for adjusting the amount of intake air, and is started by cranking. A starter switch (36) detects the start of cranking, and crank angle sensors (33, 34) detect the rotational speed of the engine. A controller (31) initiates cranking and drives the throttle (23) to a closed position. The controller (31) counts the number of strokes or the rotational speed of the internal combustion engine (1) from the start of cranking, and when the count reaches a predetermined number, the controller (31) opens the throttle from the closed position so as to ensure a manifold vacuum for facilitating the vaporization of fuel and to ensure the amount of intake air required to maintain the idle speed.

No. of Pages : 41 No. of Claims : 7

(12) PATENT APPLICATION PUBLICATION
(21) Application No.598/KOLNP/2013 A
(19) INDIA
(22) Date of filing of Application :05/03/2013
(43) Publication Date : 05/07/2013

(54) Title of the invention : HIGH STRENGTH STEEL SHEET AND METHOD FOR MANUFACTURING THE SAME

(51) International classification :C21D9/56,B21B1/22,C21D1/74
(31) Priority Document No :2010-218397
(32) Priority Date :29/09/2010
(33) Name of priority country :Japan
(86) International Application No :PCT/JP2011/072491
Filing Date :22/09/2011
(87) International Publication No :WO 2012/043776
(61) Patent of Addition to Application Number :NA
Filing Date :NA
(62) Divisional to Application Number :NA
Filing Date :NA

(71)**Name of Applicant :**
1)JFE STEEL CORPORATION
Address of Applicant :2-3, Uchisaiwai-cho 2-chome, Chiyoda-ku, Tokyo 100-0011 Japan
(72)**Name of Inventor :**
1)FUSHIWAKI Yusuke
2)SUZUKI Yoshitsugu

(57) Abstract :
Provided are: a high strength steel sheet that exhibits excellent chemical convertibility and post-electrodeposition-coating corrosion resistance, even with a high silicon content; and a manufacturing method therefor. When performing continuous annealing on a steel sheet that contains, by mass, 0.01 0.18% carbon, 0.4- 2.0% silicon, 1.0-3.0% manganese, 0.001 1.0% aluminum, 0.005 0.060% phosphorus, and at most 0.01% sulfur, with the remainder comprising iron and unavoidable impurities, during a soaking process, the atmospheric dew point is brought to -45°C or less for an annealing- furnace temperature range of 820-1000°C, and during a cooling process, the atmospheric dew point is brought to -45°C or less for an annealing-furnace temperature range of 750°C or greater.

No. of Pages : 42 No. of Claims : 4

(12) PATENT APPLICATION PUBLICATION
(19) INDIA
(22) Date of filing of Application :21/02/2013

(21) Application No.439/KOLNP/2013 A
(43) Publication Date : 05/07/2013

(54) Title of the invention : MULTI-HOP COMMUNICATION SYSTEM

(51) International classification :H04W40/16,H04W40/22
(31) Priority Document No :2010-190036
(32) Priority Date :26/08/2010
(33) Name of priority country :Japan
(86) International Application No :PCT/IB2011/001946
Filing Date :25/08/2011
(87) International Publication No :WO 2012/028919
(61) Patent of Addition to Application Number :NA
Filing Date :NA
(62) Divisional to Application Number :NA
Filing Date :NA

(71)**Name of Applicant :**
1)PANASONIC CORPORATION
Address of Applicant :1006,OAZA KADOMA,KADOMA-SHI, OSAKA 571-8501,Japan
(72)**Name of Inventor :**
1)YUKIO OKADA
2)JUNICHI SUZUKI

(57) Abstract :
Communication cells (C1,C2...) in which multi- hop communication is carried out by a parent terminal (1) and a plurality of child terminals (2) are established, and if the magnitude of interference in communication between the communication cell to which a parent terminal (1) belongs and another communication cell having the same intra-cell channel exceeds a predetermined threshold value, the parent terminal (1) selects, from one to a plurality of wireless channels which are not used as the intra-cell channel in the communication cell to which the terminal belongs or adjoining communication cells, the wireless channel with the minimum interference level based on the frequency distance between the intra-cell channel of the communication cell to which the parent terminal (1) belongs and the adjoining communication cells, and sets the selected wireless channel to the intra cell channel of the communication cell to which it itself belongs.

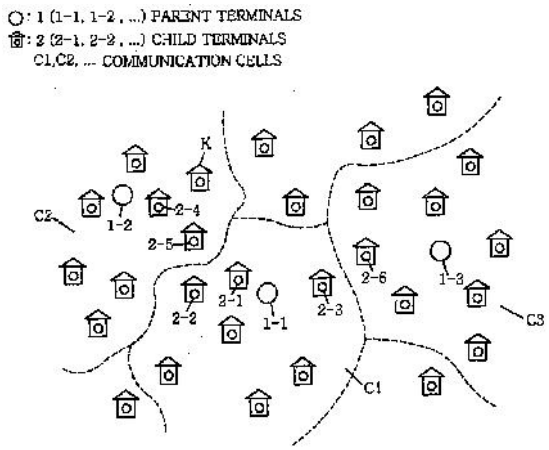

No. of Pages : 104 No. of Claims : 19

(12) PATENT APPLICATION PUBLICATION
(21) Application No.520/KOLNP/2013 A
(19) INDIA
(22) Date of filing of Application :27/02/2013
(43) Publication Date : 05/07/2013

(54) Title of the invention : POLYMER NANOCOMPOSITE COMPRISING POLYLACTIC ACID REINFORCED WITH THE MODIFIED PHYLLOSILICATE

(51) International classification :C08K3/34
(31) Priority Document No :10382216.9
(32) Priority Date :04/08/2010
(33) Name of priority country :EPO
(86) International Application No :PCT/EP2011/063405
Filing Date :03/08/2011
(87) International Publication No :WO 2012/017025
(61) Patent of Addition to Application Number :NA
Filing Date :NA
(62) Divisional to Application Number :NA
Filing Date :NA

(71)**Name of Applicant :**
1)INSTITUTO TECNOLÓGICO DEL EMBALAJE,TRANSPORTE Y LOGÍSTICA ITENE
Address of Applicant :PARQUE TECNOLÓGICO DE VALENCIA, C. ALBERT EINSTEIN,1 E-46980 PATERNA Spain
(72)**Name of Inventor :**
1)AUCEJO ROMERO, SUSANA
2)JORDÁ BENEYTO, MARÍA
3)ALONSO SORIANO,JOSÉ MARÍA
4)GALLUR BLANCA, MIRIAM
5)BERMUDEZ SALDAÑA, JOSÉ MARÍA
6)HORTAL RAMOS, MERCEDES

(57) Abstract :
Polymer nanocomposite comprising: a) a polylactic polymer; and b) a modified phyllosilicate composition comprising a modifying agent which is hexadecyl trimethyl ammonium cations which are intercalated between the layers of the phyllosilicate its preparation process. The polymer nanocomposite is particularly useful for packaging particularly food and drink packaging.

No. of Pages : 22 No. of Claims : 14

(12) PATENT APPLICATION PUBLICATION
(21) Application No.568/KOLNP/2013 A
(19) INDIA
(22) Date of filing of Application :04/03/2013
(43) Publication Date : 05/07/2013

(54) Title of the invention : CHARGING PORT COVER AND CHARGING PORT STRUCTURE

(51) International classification :B60K1/04,B60L11/18,H01R13/52
(31) Priority Document No :2010-223796
(32) Priority Date :01/10/2010
(33) Name of priority country :Japan
(86) International Application No :PCT/JP2011/067089
Filing Date :27/07/2011
(87) International Publication No :WO 2012/043042
(61) Patent of Addition to Application Number :NA
Filing Date :NA
(62) Divisional to Application Number :NA
Filing Date :NA

(71)**Name of Applicant :**
1)NISSAN MOTOR CO., LTD.
Address of Applicant :2, Takara-cho, Kanagawa-ku Yokohama-shi, Kanagawa 221-0023, Japan
(72)**Name of Inventor :**
1)Junichi YAMAMARU
2)Daisuke TAKASHIMA
3)Masaaki TAKAGI
4)Masato INOUE
5)Tooru YAMASHITA

(57) Abstract :
A charging port cover is provided with a covering body (37, 39, 41) that covers an open portion (36) formed between an open/close body (7) of an opening portion (17), which is provided to a vehicle body (1, 3) of a vehicle containing charge inlets (19, 21), and the vehicle body (1, 3) when the open/close body (7), which can be opened and closed, is opened when charging a battery installed in the vehicle by attaching a charging gun (30) to the charge inlets (19, 21). The covering body is provided with a cover side engaging portion (51) and a cover side engagement target portion (85) that are provided between the open/close body (7) and the vehicle body (1, 3) and that, when the covering body covers the open portion (36), respectively engage with an engagement target portion (34) for engaging and locking the closed open/close body (7) to the vehicle body (1, 3), and an engaging portion (29) for engaging to the engagement target portion (34). The cover side engaging portion (51) and the cover side engagement target portion (85) are integrated with each other via a connecting member (48).

No. of Pages : 36 No. of Claims : 3

(12) PATENT APPLICATION PUBLICATION
(21) Application No.612/KOLNP/2013 A
(19) INDIA
(22) Date of filing of Application :06/03/2013
(43) Publication Date : 05/07/2013

(54) Title of the invention : PERIODIC STATIONARY OBJECT DETECTION SYSTEM AND PERIODIC STATIONARY OBJECT DETECTION METHOD

(51) International classification :G08G1/16,B60R1/00,G06T7/00
(31) Priority Document No :2011-034097
(32) Priority Date :21/02/2011
(33) Name of priority country :Japan
(86) International Application No :PCT/JP2012/053834
Filing Date :17/02/2012
(87) International Publication No :WO 2012/115009
(61) Patent of Addition to Application Number :NA
Filing Date :NA
(62) Divisional to Application Number :NA
Filing Date :NA

(71)**Name of Applicant :**
1)NISSAN MOTOR CO., LTD.
Address of Applicant :2, Takara-cho, Kanagawa-ku Yokohama-shi, Kanagawa 221-0023, Japan
(72)**Name of Inventor :**
1)TSUCHIYA Chikao
2)HAYAKAWA Yasuhisa
3)TANAKA Shinya
4)FURUSHOU Hiroyuki
5)FUKATA Osamu

(57) Abstract :
Provided is a periodic stationary object detection device , which: extracts, from image data of a predetermined region of a birds eye view image, a feature point of a three- dimensional object for each of multiple small areas included in the predetermined region; calculates waveform data corresponding to the distribution of the feature points in the predetermined region on the birds eye view image; and determines whether each three dimensional object having the respective extracted feature point is a periodic stationary object candidate, on the basis of whether the pieces of peak information of the waveform data are equal to or greater than a predetermined threshold value.

No. of Pages : 86 No. of Claims : 15

(12) PATENT APPLICATION PUBLICATION
(21) Application No.566/KOLNP/2013 A
(19) INDIA
(22) Date of filing of Application :01/03/2013
(43) Publication Date : 05/07/2013

(54) Title of the invention : HIGH-STRENGTH HOT-ROLLED STEEL SHEET HAVING EXCELLENT FATIGUE RESISTANCE AND METHOD FOR MANUFACTURING THE SAME

(51) International classification :C22C38/00,C21D8/02,C21D9/46
(31) Priority Document No :2010-210188
(32) Priority Date :17/09/2010
(33) Name of priority country :Japan
(86) International Application No :PCT/JP2011/071764
Filing Date :15/09/2011
(87) International Publication No :WO 2012/036312
(61) Patent of Addition to Application Number :NA
Filing Date :NA
(62) Divisional to Application Number :NA
Filing Date :NA

(71)**Name of Applicant :**
1)JFE STEEL CORPORATION
Address of Applicant :2-3, Uchisaiwai-cho 2-chome, Chiyoda-ku, Tokyo 100-0011, Japan
(72)**Name of Inventor :**
1)NAKAJIMA Katsumi
2)SAITO Hayato
3)FUNAKAWA Yoshimasa
4)MORIYASU Noriaki
5)MURATA Takayuki

(57) Abstract :
The present invention provides a high-strength hot-rolled steel sheet having superior fatigue resistance properties and a method for producing same, said steel sheet being characterized by having: a composition containing by mass % 0.05 0.15% C, 0.2 1.2% Si, 1.0 2.0% Mn, 0.005 0.10% Al, and no more than 0.006% N, and further containing one or more of 0.03 0.13% Ti, 0.02 0.10% Nb, and 0.02 0.15% V; a structure such that the surface layer section from the surface to a depth of 500 µm in the sheet thickness direction has a bainite phase at an area ratio of at least 50%, the average particle diameter of this bainite phase being 5 µm or less; a structure such that the central section in the thickness direction in the range from the 1/4 position to the 3/4 position in this thickness direction has a bainite phase at an area ration of at least 90%, the average particle diameter of this bainite phase being 4 µm or less; and a tensile strength (TS) of the steel sheet is at least 780 MPa.

No. of Pages : 42 No. of Claims : 8

(12) PATENT APPLICATION PUBLICATION
(21) Application No.567/KOLNP/2013 A
(19) INDIA
(22) Date of filing of Application :04/03/2013
(43) Publication Date : 05/07/2013

(54) Title of the invention : MULTI-PURPOSE TRUCK FOR RE-ESTABLISHMENT OF SAFE AND PRACTICABLE ROAD CONDITIONS, AFTER CAR ACCIDENTS THROUGH CLEANING OF THE ROAD PLATFORM

(51) International classification :B08B3/02,B08B3/08
(31) Priority Document No :10425291.1
(32) Priority Date :08/09/2010
(33) Name of priority country :EPO
(86) International Application No :PCT/EP2011/065505
Filing Date :07/09/2011
(87) International Publication No :WO 2012/032101
(61) Patent of Addition to Application Number :NA
Filing Date :NA
(62) Divisional to Application Number :NA
Filing Date :NA

(71)**Name of Applicant :**
1)Sicurezza e Ambiente S.p.A.
Address of Applicant :Largo Ferruccio Mengaroni, 25 I-00133 Rome ITALY
(72)**Name of Inventor :**
1)CACCIOTTI, Angelo

(57) Abstract :
Multi-purpose truck (100) for re-establishment of safe and practicable road conditions, after car accidents, through cleaning of the road platform, said truck being equipped by: - tanks containing: clean water; water mixed to a special washing liquid (ecological surfactant) and a special treatment liquid for the road platform (so called molecular chain destroyer, to be sprayed on oil and related oil products) (803); emulsion obtained by collection of the washing/treatment liquids and the polluting oil materials; - a high-pressure water gun, including a rain jet adjustment, (802), providing a jet of the above said solution on the road platform, where polluting functional liquids (lubricating oils, fuels, cooling substances, etc.) have been eventually lost by vehicles as a consequence of car accidents or breakdown; - a suction system (804) suitable to remove, from the road platform, the above resulting emulsion (806), obtained from polluting materials mixed to the washing/treatment solution (803); furthermore, solid and not biodegradable debris are removed/aspirated, these debris being related to typical car equipments (broken glasses, parts made of plastic, metals, remaining parts of structures, etc.) (805); - tanks containing the resulting emulsion (806) and the removed solid remaining parts, to be temporary stocked at the site of the company that made the intervention, before to be definitely delivered to special and authorized plants, where they are processed and finished according to specific operative procedures in respect to the existing environmental laws, characterized in that: - the power supply, necessary to make the multi- purpose truck (100) working properly, can be directly provided by the engine and/or any other point of energy transmission in the kinematic chain, otherwise it can be directly provided by a pneumatic circuit previously installed on the same truck (100); the extracted energy can be therefore used as a power supply for mechanical, electrical or hydraulic devices.

No. of Pages : 27 No. of Claims : 14

(12) PATENT APPLICATION PUBLICATION
(19) INDIA
(22) Date of filing of Application :06/03/2013
(21) Application No.614/KOLNP/2013 A
(43) Publication Date : 05/07/2013

(54) Title of the invention : VEHICLE BAMPER

(51) International classification :B60R19/18,B60R19/48
(31) Priority Document No :2010-228568
(32) Priority Date :08/10/2010
(33) Name of priority country :Japan
(86) International Application No :PCT/JP2011/072536
Filing Date :30/09/2011
(87) International Publication No :WO 2012/046647
(61) Patent of Addition to Application Number :NA
Filing Date :NA
(62) Divisional to Application Number :NA
Filing Date :NA

(71)**Name of Applicant :**
1)NISSAN MOTOR CO., LTD.
Address of Applicant :2 Takara-cho, Kanagawa-ku Yokohama-shi, Kanagawa 221-0023, Japan
(72)**Name of Inventor :**
1)ASHIYA Hotaka
2)HISAJIMA Kazumi
3)AOKI Teruaki
4)KUGAYA Takuji
5)ISHIDA Takahide
6)NAGAE Kunji
7)OIKI Daisuke
8)IKEDA Tarou
9)TSURUTA Masaru
10)YOTSUNAGA Yasuo
11)EHARA Shunsuke
12)MIZUTANI Norimasa
13)DAVID Sylvan
14)IWAI Nobuhiro

(57) Abstract :
A bumper absorber (9) has a squared C- shaped cross-section consisting of: a vertical surface (11) which extends in the vertical direction and along the vehicle width direction; and an upper surface (12) and a lower surface (13) which extend rearward from the upper and lower ends of the vertical surface (11). The bumper absorber (9) is configured in such a manner that the upper surface (12) and the lower surface (13) are supported by a bumper reinforcement (10) through mounting members (23-27). The pitch of the mounting members adjacent to each other in the vehicle width direction is set so as to decrease from each end (9b) of the bumper absorber (9) in the vehicle width direction toward the center (9a) thereof in the vehicle width direction.

No. of Pages : 24 No. of Claims : 4

(12) PATENT APPLICATION PUBLICATION
(19) INDIA
(22) Date of filing of Application :14/12/2012

(21) Application No.3982/KOLNP/2012 A
(43) Publication Date : 05/07/2013

(54) Title of the invention : MULTI-PHASE CONVERTER

(51) International classification :H02M7/12,H02M3/155
(31) Priority Document No :2010-141160
(32) Priority Date :22/06/2010
(33) Name of priority country :Japan
(86) International Application No :PCT/JP2011/064860
Filing Date :22/06/2011
(87) International Publication No :WO 2011/162410
(61) Patent of Addition to Application Number :NA
Filing Date :NA
(62) Divisional to Application Number :NA
Filing Date :NA

(71)**Name of Applicant :**
1)RICOH COMPANY, LIMITED
Address of Applicant :3-6, Nakamagome 1-chome, Ohta-ku, Tokyo, 1438555 Japan
(72)**Name of Inventor :**
1)IWATA, Takeshi

(57) Abstract :
A multi-phase converter of one of the embodiments includes: a plurality of AC/DC converters which are connected in parallel to each other, wherein each of the plurality of AC/DC converters includes a power factor correction circuit and a DC/DC converter that is connected in series to the power factor correction circuit and that receives an output from the power factor correction circuit and the power factor correction circuit includes an output voltage adjusting circuit that adjusts an output voltage from the power factor correction circuit.

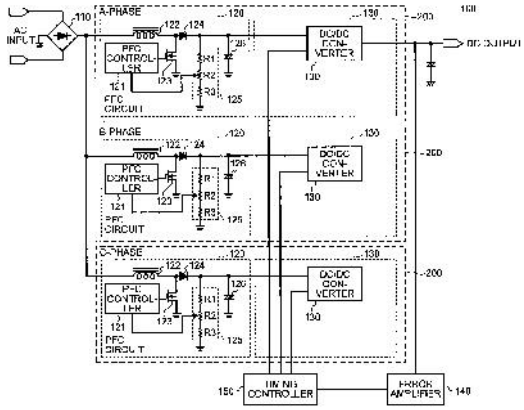

No. of Pages : 29 No. of Claims : 4

(12) PATENT APPLICATION PUBLICATION
(19) INDIA
(22) Date of filing of Application :21/02/2013
(21) Application No.443/KOLNP/2013 A
(43) Publication Date : 05/07/2013

(54) Title of the invention : OIL SUPPLY SYSTEM FOR A STATIONARY TURBOMACHINE

(51) International classification :F02C7/06,F02B39/14,F16N7/38
(31) Priority Document No :10178310.8
(32) Priority Date :22/09/2010
(33) Name of priority country :EPO
(86) International Application No :PCT/EP2011/066282
Filing Date :20/09/2011
(87) International Publication No :WO 2012/038402
(61) Patent of Addition to Application Number :NA
Filing Date :NA
(62) Divisional to Application Number :NA
Filing Date :NA

(71)**Name of Applicant :**
1)SIEMENS AKTIENGESELLSCHAFT
Address of Applicant :WITTELSBACHERPLATZ 2, 80333 MÜNCHEN,Germany
(72)**Name of Inventor :**
1)EICKELKAMP,JAN
2)JÜTTNER , CHRISTOPH
3)MALANGONE, BARBARA
4)RAUH, HORST UWE
5)HAHN , JÜRGEN
6)SIMON, GERHARD

(57) Abstract :
The invention relates to an oil supply system (10) for a stationary turbomachine, wherein safe operation of the turbomachine is enabled even at ambient temperatures of up to 60°C for a plurality of hours in a novel connection arrangement of the components of the oil supply system, such as the oil tank (12), pump (14,18, 20,22), and heat exchanger (40), as well as the pipeline system, without one of said components having to be designed for a further increased operating temperature. According to the invention, to this end, the oil tank (12) comprises two regions (36,38) stacked horizontally one above the other for storing the oil said two regions (36,38) being largely or completely separated from each other by a separating element (34).

No. of Pages : 19 No. of Claims : 6

(12) PATENT APPLICATION PUBLICATION
(19) INDIA
(22) Date of filing of Application :04/03/2013
(21) Application No.575/KOLNP/2013 A
(43) Publication Date : 05/07/2013

(54) Title of the invention : BENZODIOXOLE DERIVATIVES AS WATERY ODORANTS

(51) International classification :A61K8/49,A61Q13/00
(31) Priority Document No :10186421.3
(32) Priority Date :04/10/2010
(33) Name of priority country :EPO
(86) International Application No :PCT/EP2011/066951
Filing Date :29/09/2011
(87) International Publication No :WO 2012/045646
(61) Patent of Addition to Application Number :NA
Filing Date :NA
(62) Divisional to Application Number :NA
Filing Date :NA

(71)**Name of Applicant :**
1)FIRMENICH SA
Address of Applicant :1, Route Des Jeunes, P.O. Box 239, CH-1211 Geneva 8 Switzerland
(72)**Name of Inventor :**
1)HUBOUX, Alexandre
2)GAUDIN, Jean-Marc
3)MILLET, Pascal
4)ROBVIEUX, Fabrice

(57) Abstract :
The present invention relates to compounds of formula (I) in the form of any one of its stereoisomers or a mixture thereof, and wherein R1 represents a substituent of the benzene ring and is a bromine atom or a linear, branched or cyclic C1-8 alkyl, alkenyl, alkoxy or alkenyloxy group; R2 represents a C1-3 alkyl group; and R3 represents a hydrogen atom or a methyl or ethyl group; and their use as perfuming ingredients, for instance to impart odor notes of the watery/ozone type.

No. of Pages : 32 No. of Claims : 15

(12) PATENT APPLICATION PUBLICATION
(21) Application No.576/KOLNP/2013 A
(19) INDIA
(22) Date of filing of Application :04/03/2013
(43) Publication Date : 05/07/2013

(54) Title of the invention : STACKABLE PLASTIC CONTAINER

(51) International classification :B62D21/00
(31) Priority Document No :12/855,902
(32) Priority Date :13/08/2010
(33) Name of priority country :U.S.A.
(86) International Application No :PCT/US2011/047401
Filing Date :11/08/2011
(87) International Publication No :WO 2012/021691
(61) Patent of Addition to Application Number :NA
Filing Date :NA
(62) Divisional to Application Number :NA
Filing Date :NA

(71)**Name of Applicant :**
1)PLASTIPAK PACKAGING, INC.
Address of Applicant :41605 Ann Arbor Road, Plymouth, MI 48170 U.S.A.
(72)**Name of Inventor :**
1)DORN, James, Christopher

(57) Abstract :
A stackable plastic container includes a base portion, a sidewall portion, and an upper portion. The base portion is configured to support the container, and includes an upwardly-extending central base portion and a base reinforcement formation. The sidewall portion extends upwardly from the base portion, and may include a sidewall reinforcement formation. The upper portion extends upwardly from the sidewall portion, and includes a shoulder portion, an angled portion, a neck portion, and a dispensing opening. The base portion may be configured to withstand hydrostatic pressure. A portion of the shoulder portion may be configured to flex downwardly in response to a top load force applied to the neck of the container. The upwardly extending central base portion may be configured to receive an upper portion of another container. With embodiments, in a stacked configuration, the upper portion of another container contacts the central base portion of the container.

No. of Pages : 34 No. of Claims : 21

(12) PATENT APPLICATION PUBLICATION
(19) INDIA
(22) Date of filing of Application :06/03/2013
(21) Application No.620/KOLNP/2013 A
(43) Publication Date : 05/07/2013

(54) Title of the invention : TEMPERATURE ESTIMATION METHOD AND DEVICE FOR FLUID SYSTEM

(51) International classification :G01K13/02,F24H1/18,G01K7/00
(31) Priority Document No :2010-222844
(32) Priority Date :30/09/2010
(33) Name of priority country :Japan
(86) International Application No :PCT/JP2011/072176
Filing Date :28/09/2011
(87) International Publication No :WO 2012/043624
(61) Patent of Addition to Application Number :NA
Filing Date :NA
(62) Divisional to Application Number :NA
Filing Date :NA

(71)**Name of Applicant :**
1)JFE STEEL CORPORATION
Address of Applicant :2-3, Uchisaiwai-cho 2-chome, Chiyoda-ku, Tokyo 1000011 Japan
(72)**Name of Inventor :**
1)TAKAHASHI, Koichi
2)ASANO, Kazuya
3)KAJI, Takayuki
4)MASUDA, Hiroaki
5)KUNIMORI, Hiromi

(57) Abstract :
A temperature estimation device acquires the flow field of a fluid system. Next,the temperature estimation device sets regions (E31-E34,E,F,G) which individually include temperature actual measurement parts (A-D),a heat absorption/generation part (E), and inflow/outflow parts (F,G),respectively, within the fluid system and do not overlap each other. Then,the temperature estimation device acquires,as downstream-side force of each of the parts (A-G),the proportion of a fluid which has reached to a temperature estimation point without passing through the other regions among fluids passing through each of the regions (E31-E34,E,F,G) in accordance with an advection diffusion phenomenon produced by the flow field or generated in each of the regions (E31-E34,E,F,G) in all fluids at the temperature estimation point. On the basis of the known temperature of each of the parts (A-G),the temperature estimation device estimates the temperature at the temperature estimation point using the downstream side force of each of the parts at the temperature estimation point.

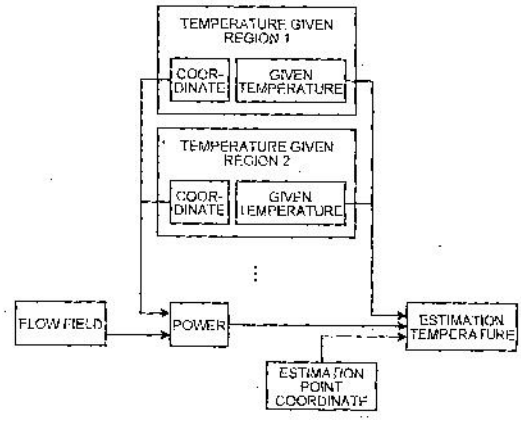

No. of Pages : 148 No. of Claims : 14

(12) PATENT APPLICATION PUBLICATION
(21) Application No.310/KOLNP/2013 A
(19) INDIA
(22) Date of filing of Application :05/02/2013
(43) Publication Date : 05/07/2013

(54) Title of the invention : LAYERED COMPOSITE MATERIAL FOR SLIDING ELEMENTS, METHOD FOR PRODUCING SAME AND USE THEREOF

(51) International classification	:C23C28/02,C25D3/30,C25D3/32	(71)**Name of Applicant :**
(31) Priority Document No	:10 2010 040 469.1	**1)FEDERAL-MOGUL WIESBADEN GMBH**
(32) Priority Date	:09/09/2010	Address of Applicant :StielstraBe 11, 65201 Wiesbaden, Germany
(33) Name of priority country	:Germany	(72)**Name of Inventor :**
(86) International Application No	:PCT/EP2011/058762	**1)STASCHKO, Klaus**
Filing Date	:27/05/2011	**2)MAGOMAJEW, Juri**
(87) International Publication No	:WO 2012/031792	
(61) Patent of Addition to Application Number	:NA	
Filing Date	:NA	
(62) Divisional to Application Number	:NA	
Filing Date	:NA	

(57) Abstract :
The invention relates to a layered composite material for sliding elements, comprising a base layer, applied to the surface of a sliding element, made of an alloy comprising copper or aluminum and a sliding layer situated over said layer, wherein the sliding layer comprises 90 99.6 wt % of tin or tin alloy having a tin ratio of greater than 60 wt % and 0.2 6 wt % solid lubricant particles having a Mohs hardness of ≤ 3 and a particle size of ≤ 10 μm. The invention further relates to the production of said layered composite material and to use thereof for sliding bearings.

No. of Pages : 16 No. of Claims : 8

(12) PATENT APPLICATION PUBLICATION
(21) Application No.370/KOLNP/2013 A
(19) INDIA
(22) Date of filing of Application :12/02/2013
(43) Publication Date : 05/07/2013

(54) Title of the invention : SELF- CROSSLINKING POLYSILOXANE- MODIFIED POLYHYDROXY POLYURETHANE RESIN , RESIN MATERIAL CONTAINING SAME, METHOD FOR PRODUCING SAME, ARTIFICIAL LEATHER COMPRISING SAME, AND THERMOPLASTIC POLYOLEFIN SKIN MATERIAL COMPRISING SAME

(51) International classification :C08G18/80,C08G71/04,C08L75/12
(31) Priority Document No :2010-189774
(32) Priority Date :26/08/2010
(33) Name of priority country :Japan
(86) International Application No :PCT/JP2011/068342
Filing Date :11/08/2011
(87) International Publication No :WO 2012/026338
(61) Patent of Addition to Application Number :NA
Filing Date :NA
(62) Divisional to Application Number :NA
Filing Date :NA

(71)**Name of Applicant :**
1)DAINICHISEIKA COLOR & CHEMICALS MFG. CO., LTD.,
Address of Applicant :7-6, NIHONBASHI BAKURO-CHO 1-CHOME,CHUO-KU, TOKYO 103-8383 Japan
2)UKIMA CHEMICALS & COLOR MFG. CO., LTD.
(72)**Name of Inventor :**
1)HANADA , KAZUYUKI
2)KIMURA , KAZUYA
3)TAKAHASHI ,KENICHI
4)KAWAKAMI, OSAMU
5)URUNO, MANABU`

(57) Abstract :
The invention is a self-crosslinking polysiloxane-modified polyhydroxy polyurethane resin which has a polysiloxane segment and a masked isocyanate group in the structure thereof and is derived from a reaction between a five-membered cyclic carbonate polysiloxane compound represented by general formula (1) and an amine compound. The invention also is a method for producing the same. According to the invention, with respect to a polyhydroxy polyurethane resin, the application of which has not progressed in the prior art, a novel self-crosslinking polyhydroxy polyurethane resin which is capable of providing a product or the like having excellent smoothness, abrasion resistance, chemical resistance, non-adhesiveness, heat resistance, etc., and is useful in terms of reduction of greenhouse gas and therefore is environmentally responsive can be provided.

No. of Pages : 94 No. of Claims : 14

(12) PATENT APPLICATION PUBLICATION
(19) INDIA
(22) Date of filing of Application :14/02/2013
(21) Application No.389/KOLNP/2013 A
(43) Publication Date : 05/07/2013

(54) Title of the invention : SUPPLY PACKS AND METHODS AND SYSTEMS FOR MANUFACTURING SUPPLY PACKS

(51) International classification :B65D85/84
(31) Priority Document No :61/375,423
(32) Priority Date :20/08/2010
(33) Name of priority country :U.S.A.
(86) International Application No :PCT/US2011/048666
Filing Date :22/08/2011
(87) International Publication No :WO 2012/024685
(61) Patent of Addition to Application Number :NA
Filing Date :NA
(62) Divisional to Application Number :NA
Filing Date :NA

(71)**Name of Applicant :**
1)SKYLIFE TECHNOLOGY HOLDINGS, LLC
Address of Applicant :405 MADISON AVE.,8TH FLOOR TOLEDO,OH 43604 U.S.A.
(72)**Name of Inventor :**
1)POTTER , JEFFREY, J
2)MCNEIL, LAIN, A
3)POTTER , TERRY, C.
4)POTTER, ANDREW, E.

(57) Abstract :
A cost-effective pack adapted to be distributed from an aircraft in the event of a natural, military, political, or other disaster includes an outer package, at least one item in the outer package for aerial delivery, and at least one aerodynamic component formed on the outer package and methods and systems for making the pack.

No. of Pages : 44 No. of Claims : 47

(12) PATENT APPLICATION PUBLICATION
(19) INDIA
(22) Date of filing of Application :27/02/2013

(21) Application No.530/KOLNP/2013 A
(43) Publication Date : 05/07/2013

(54) Title of the invention : METHOD, APPARATUS, AND SYSTEM FOR RESOURCE IMMEDIATE ASSIGNMENT

(51) International classification :H04W72/04
(31) Priority Document No :201010268981.X
(32) Priority Date :24/08/2010
(33) Name of priority country :China
(86) International Application No :PCT/CN2011/074974
Filing Date :31/05/2011
(87) International Publication No :WO 2011/150825
(61) Patent of Addition to Application Number :NA
Filing Date :NA
(62) Divisional to Application Number :NA
Filing Date :NA

(71)**Name of Applicant :**
1)HUAWEI TECHNOLOGIES CO., LTD.
Address of Applicant :HUAWEI ADMINISTRATION BUILDING BANTIAN,LONGGANG DISTRICT, SHENZHEN,GUANGDONG 518129 China
(72)**Name of Inventor :**
1)FANG, MING
2)WANG,JIYONG
3)SHU, BING

(57) Abstract :
Embodiments of the present invention disclose a method, an apparatus, and a system for resource immediate assignment, which includes: constructing an immediate assignment message according to channel request messages of at least two terminals, where the immediate assignment message assigns a channel resource for the at least two terminals according to the channel request messages of the at least two terminals; and sending the immediate assignment message out. By implementing the embodiments of the present invention, in a case that a valid byte of an immediate assignment message is unchanged, one immediate assignment message can assign a packet resource for at least two terminals, thereby satisfying an access requirement of more terminals.

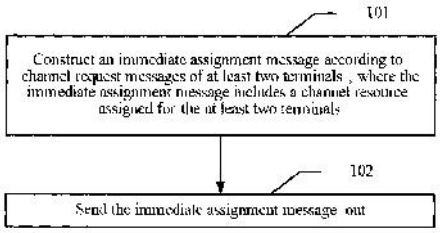

No. of Pages : 30 No. of Claims : 17

(12) PATENT APPLICATION PUBLICATION
(21) Application No.624/KOLNP/2013 A
(19) INDIA
(22) Date of filing of Application :06/03/2013
(43) Publication Date : 05/07/2013

(54) Title of the invention : CIRCUIT HOUSING HAVING A PRINTED CIRCUIT BOARD WHICH IS POSITIONED IN SAID CIRCUIT HOUSING BY MEANS OF POSITIONING ELEMENTS

(51) International classification :H05K7/14,H05K5/00
(31) Priority Document No :10 2010 044 909.1
(32) Priority Date :09/09/2010
(33) Name of priority country :Germany
(86) International Application No :PCT/EP2011/065363
Filing Date :06/09/2011
(87) International Publication No :WO 2012/032027
(61) Patent of Addition to Application Number :NA
Filing Date :NA
(62) Divisional to Application Number :NA
Filing Date :NA

(71)**Name of Applicant :**
1)KNORR-BREMSE SYSTEME FÜR NUTZFAHRZEUGE GMBH
Address of Applicant :Moosacher Str. 80, 80809 München, Germany
(72)**Name of Inventor :**
1)STÖHR Rainer
2)REGN Stefan
3)KAPTUR Fabian

(57) Abstract :
The invention relates to a circuit housing (1) having at least one printed circuit board (8) which is arranged in said circuit housing and has an electrical circuit and at least two holes (14,16) in which peg-like positioning elements (18,20) which project away from the circuit housing (1) engage at least for the purpose of positioning the printed circuit board (8) relative to the circuit housing (1),wherein at least one positioning element (18,20) from amongst the positioning elements (18,20) projects without play into one circular hole from amongst the holes. The invention makes provision for a further positioning element (20),which is accommodated in a further hole (16) from amongst the holes (14,16), to have spreading fingers (40) which are separated from one another by at least one recess (36),project into or through the further hole (16),are designed to be elastic transverse to the direction of an imaginary connecting line (38) of the holes (14,16) and have a cross section such that a),as viewed in the direction of the imaginary connecting line (38),there is play between said spreading fingers and a radially inner circumferential surface of the further hole (16) on both sides,but b) said spreading fingers make contact by means of their diametrically opposite side faces (42) with the radially inner circumferential surface of the further hole (16) perpendicular to the imaginary connecting line (38) without play only along a contact line (44) or a contact point in each case.

No. of Pages : 23 No. of Claims : 11

(12) PATENT APPLICATION PUBLICATION
(19) INDIA
(22) Date of filing of Application :04/03/2013
(21) Application No.580/KOLNP/2013 A
(43) Publication Date : 05/07/2013

(54) Title of the invention : VIAL PREPARATION METHOD AND SYSTEM

(51) International classification :B65B31/02,B65D47/32
(31) Priority Document No :61/371,318
(32) Priority Date :06/08/2010
(33) Name of priority country :U.S.A.
(86) International Application No :PCT/AU2011/001013
Filing Date :05/08/2011
(87) International Publication No :WO 2012/016301
(61) Patent of Addition to Application Number :NA
Filing Date :NA
(62) Divisional to Application Number :NA
Filing Date :NA

(71)**Name of Applicant :**
1)HOSPIRA AUSTRALIA PTY LTD
Address of Applicant :Level 3, 500 Collins Street, Melbourne, Victoria 3000 Australia
(72)**Name of Inventor :**
1)WENSLEY, Emma J
2)KNILL, Andrew Malcolm
3)SUENDERMANN, John Fredric

(57) Abstract :
Embodiments generally relate to vial preparation methods and to vials prepared by such methods. Some embodiments relate to use of an apparatus, such as a lyophilisation apparatus, to perform the methods. An illustrative vial preparation method comprises: housing a plurality of vials in a temperature-controlled environment, wherein the plurality of vials each have a volume of a substance therein and each defines an unfilled volume therein, each vial having a stopper partially inserted into an opening of the vial so that gas can transfer between the unfilled volume and an external volume; applying a vacuum to the environment to reduce pressure in the environment and in the unfilled volume of each vial to a first pressure level; venting an inert gas into the environment to raise the pressure in the environment and in the unfilled volume of each vial to a second pressure level; allowing the vials to rest in the environment at the second pressure level for a predetermined period; repeating the applying, venting and allowing at least once; and fully inserting the stopper into each opening to seal each vial after the repeating.

No. of Pages : 48 No. of Claims : 122

(12) PATENT APPLICATION PUBLICATION
(19) INDIA
(22) Date of filing of Application :04/03/2013
(21) Application No.581/KOLNP/2013 A
(43) Publication Date : 05/07/2013

(54) Title of the invention : HAND HELD FLARING TOOL

(51) International classification :B21D19/00
(31) Priority Document No :61/371,317
(32) Priority Date :06/08/2010
(33) Name of priority country :U.S.A.
(86) International Application No :PCT/US2011/046354
Filing Date :03/08/2011
(87) International Publication No :WO 2012/018875
(61) Patent of Addition to Application Number :NA
Filing Date :NA
(62) Divisional to Application Number :NA
Filing Date :NA

(71)**Name of Applicant :**
1)AMERICAN GREASE STICK COMPANY
Address of Applicant :2651 Hoyt Street, Muskegon, Michigan 49443 U.S.A.
(72)**Name of Inventor :**
1)HASENBERG, Mark J.
2)PITTS, Logan D.
3)PEIRCE, John M.

(57) Abstract :
A hand held flaring tool (10) includes a receiving portion (10a) for receiving an end of a tube (22), a stop element (36), a locking mechanism (18) and a flaring mechanism (20). The stop element is movably disposed at the receiving portion and is movable between a stopping position, where the stop element limits insertion of the tube at the receiving portion to set the tube at an appropriate location for flaring the end of the tube, and a flaring position, where the stop element is moved to a position remote from the end of the tube. The locking mechanism is operable to lock the tube at the receiving portion when the tube is inserted into engagement with the stop element. The flaring mechanism is operable to move a flaring mandrel (42) towards and into engagement with the end of the tube to flare the end of the tube.

No. of Pages : 51 No. of Claims : 30

(12) PATENT APPLICATION PUBLICATION
(21) Application No.626/KOLNP/2013 A
(19) INDIA
(22) Date of filing of Application :06/03/2013
(43) Publication Date : 05/07/2013

(54) Title of the invention : MET HOD FOR THE GENERATION OF SYNTHESIS GAS

(51) International classification :C10J3/52,C10J3/84
(31) Priority Document No :10 2010 045 537.7
(32) Priority Date :15/09/2010
(33) Name of priority country :Germany
(86) International Application No :PCT/EP2011/004435
Filing Date :02/09/2011
(87) International Publication No :WO 2012/034654
(61) Patent of Addition to Application Number :NA
Filing Date :NA
(62) Divisional to Application Number :NA
Filing Date :NA

(71)**Name of Applicant :**
1)THYSSENKRUPP UHDE GMBH
Address of Applicant :Friedrich-Uhde-StraBe 15, 44141 Dortmund, Germany
(72)**Name of Inventor :**
1)DOSTAL, Johannes
2)PAVONE, Domenico

(57) Abstract :
A method for generating synthesis gas by gasification of solid or liquid carbonaceous fuels with an oxygen containing oxidizing agent in a reactor, wherein the synthesis gas is removed from the reactor overhead and the mineral ash/slag droplets produced during the reaction are removed from the reactor downwards in the direction of gravity,is intended to make it possible to use a markedly less expensive fire tube boiler for heat removal instead of a radiant boiler. This is achieved in that the synthesis gas is passed uncooled over a hot gas filter (2) and subsequently for cooling through a fire tube boiler (3),wherein the ash/slag particles separated off at the hot gas filter (2) are recirculated in the direction of gravity back to the gasification reactor (2).

No. of Pages : 27 No. of Claims : 13

(12) PATENT APPLICATION PUBLICATION
(19) INDIA
(22) Date of filing of Application :06/03/2013

(21) Application No.627/KOLNP/2013 A
(43) Publication Date : 05/07/2013

(54) Title of the invention : APPARATUS AND METHOD FOR GROWING ONE OR MORE PLANTS

(51) International classification :A01G9/16,A01G31/02
(31) Priority Document No :20 2010 012 739.4
(32) Priority Date :17/09/2010
(33) Name of priority country :Germany
(86) International Application No :PCT/EP2010/006626
Filing Date :29/10/2010
(87) International Publication No :WO 2012/034575
(61) Patent of Addition to Application Number :NA
Filing Date :NA
(62) Divisional to Application Number :NA
Filing Date :NA

(71)**Name of Applicant :**
1)HORTICOOP B.V.
Address of Applicant :Postbus 130, NL-2665 ZJ Bleiswijk, The Netherlands
2)DAAS, Kamal
3)DAAS, Talal
(72)**Name of Inventor :**
1)DAAS, Kamal
2)DAAS, TaIaI
3)VAN DER DRIFT, Peter

(57) Abstract :
The invention relates to a device (1) for cultivating one or more plants (5),said device (1) having at least one first and one second chamber (10,20) that are separated from each other by a first dividing wall (15). The interiors of the first and the second chamber (10,20) are connected by one or more connecting openings (16) in the first dividing wall (15), and the second chamber (20) has one or more outlet openings (26) that lie on a second dividing wall (25).

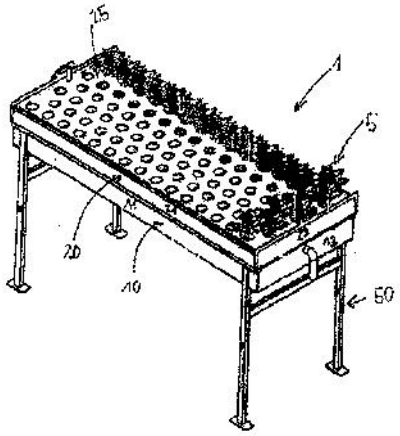

No. of Pages : 46 No. of Claims : 17

(12) PATENT APPLICATION PUBLICATION
(19) INDIA
(22) Date of filing of Application :05/03/2013
(21) Application No.600/KOLNP/2013 A
(43) Publication Date : 05/07/2013

(54) Title of the invention : MOBILE COMMUNICATION METHOD, RELAY NODE AND WIRELESS BASE STATION

(51) International classification :H04W76/02,H04W12/10
(31) Priority Document No :2010-181873
(32) Priority Date :16/08/2010
(33) Name of priority country :Japan
(86) International Application No :PCT/JP2011/068448
Filing Date :12/08/2011
(87) International Publication No :WO 2012/023514
(61) Patent of Addition to Application Number :NA
Filing Date :NA
(62) Divisional to Application Number :NA
Filing Date :NA

(71)**Name of Applicant :**
1)NTT DOCOMO, INC.
Address of Applicant :11-1, Nagatacho 2-chome, Chiyoda-ku, Tokyo 1006150 Japan
(72)**Name of Inventor :**
1)TAKAHASHI, Hideaki
2)HAPSARI, Wuri Andarmawanti
3)UMESH, Anil
4)IWAMURA, Mikio

(57) Abstract :
The disclosed mobile communication method sends and receives signaling of an S1SP/X2AP layer on a DRB established between a wireless base station (DeNB) and a relay node (RN) and involves a step for setting up the aforementioned DRB in the attachment processing of the relay node (RN) and a step for notifying the relay node (RN) and the wireless base station (DeNB) of the aforementioned DRB in the attachment processing of the relay node (RN).

No. of Pages : 32 No. of Claims : 2

(12) PATENT APPLICATION PUBLICATION
(21) Application No.601/KOLNP/2013 A
(19) INDIA
(22) Date of filing of Application :05/03/2013
(43) Publication Date : 05/07/2013

(54) Title of the invention : METHOD, RELAY NODE AND BASE STATION FOR MOBILE COMMUNICATION SYSTEM

(51) International classification :H04W16/26,H04W72/04
(31) Priority Document No :2010-181912
(32) Priority Date :16/08/2010
(33) Name of priority country :Japan
(86) International Application No :PCT/JP2011/068322
Filing Date :10/08/2011
(87) International Publication No :WO 2012/023478
(61) Patent of Addition to Application Number :NA
Filing Date :NA
(62) Divisional to Application Number :NA
Filing Date :NA

(71)**Name of Applicant :**
1)NTT DOCOMO, INC.
Address of Applicant :11-1, Nagatacho 2-chome, Chiyoda-ku, Tokyo 100-6150 Japan
(72)**Name of Inventor :**
1)MORIOKA, Yasufumi
2)YAMADA, Akira
3)HAGIWARA, Junichiro
4)TAKAHASHI, Hideaki
5)IWAMURA, Mikio

(57) Abstract :
A base station generates first setting information which is used both in the setting of a logical path for communication with a user device and in the setting of a logical path for communication with a relay node and second setting information which is only used in the setting of a logical path for communication with the relay node; and transmits a first RRC message containing the first setting information to the relay node and then subsequently transmits a second RRC message containing the second setting information to the relay node. The first setting information includes information showing the order of priority of wireless bearers according to the logical path information showing the use method for resources in an SPS information showing SRS resources configuration information for an MAC sub layer and information relating to changes to a security encryption key due to handover; the second setting information includes at least notification information and MBSFN information.

No. of Pages : 47 No. of Claims : 5

(12) PATENT APPLICATION PUBLICATION
(21) Application No.647/KOLNP/2013 A
(19) INDIA
(22) Date of filing of Application :08/03/2013
(43) Publication Date : 05/07/2013

(54) Title of the invention : SPINNING PROCESSING METHOD AND ROTOR SHAFT

(51) International classification :B21H1/04,H02K15/02
(31) Priority Document No :2011-142586
(32) Priority Date :28/06/2011
(33) Name of priority country :Japan
(86) International Application No :PCT/JP2012/065325
Filing Date :15/06/2012
(87) International Publication No :WO 2013/002041
(61) Patent of Addition to Application Number :NA
Filing Date :NA
(62) Divisional to Application Number :NA
Filing Date :NA

(71)**Name of Applicant :**
1)NISSAN MOTOR CO., LTD.
Address of Applicant :2, Takara-cho, Kanagawa-ku Yokohama-shi, Kanagawa 221-0023, Japan
(72)**Name of Inventor :**
1)MIYAOKA Hiroshi
2)TAGUCHI Naoto

(57) Abstract :
In the present invention processing is made easy even for cylindrical parts that have unbalanced sheet thickness and volume. In a spinning processing method for processing a rotor shaft (4), a material joining process material separation and deformation process and a cylinder forming process are provided. The material joining process aligns the sheet surfaces and joins at least two pieces of metal sheet material (40a, 40b, 40c) (FIG. 3). The material separation and deformation process rotates the metal sheet material (40a, 40b, 40c) by a rotating shaft (CL) that is perpendicular to the sheet material surface, and separation and deformation are carried out by applying force at the joining position on the periphery of the at least two pieces of metal sheet material (40a, 40b, 40c) that have been joined (FIG. 4). The cylinder forming process applies force to at least one piece of the metal sheet material (40a, 40b) and forms a cylinder along the rotating shaft (CL) (FIG. 5).

No. of Pages : 28 No. of Claims : 6

(12) PATENT APPLICATION PUBLICATION
(19) INDIA
(22) Date of filing of Application :08/03/2013

(21) Application No.648/KOLNP/2013 A
(43) Publication Date : 05/07/2013

(54) Title of the invention : TIRE PNEUMATIC PRESSURE MONITORING APPARATUS

(51) International classification :B60C23/02,B60C23/04,G01L17/00
(31) Priority Document No :2011-107744
(32) Priority Date :13/05/2011
(33) Name of priority country :Japan
(86) International Application No :PCT/JP2012/053974
Filing Date :20/02/2012
(87) International Publication No :WO 2012/157306
(61) Patent of Addition to Application Number :NA
Filing Date :NA
(62) Divisional to Application Number :NA
Filing Date :NA

(71)**Name of Applicant :**
1)NISSAN MOTOR CO., LTD.
Address of Applicant :2, Takara-cho, Kanagawa-ku Yokohama-shi, Kanagawa 221-0023, Japan
(72)**Name of Inventor :**
1)SHIMA Takashi
2)SAKAGUCHI Kazuo
3)TERADA Syoji

(57) Abstract :
When the deviation between a first rotation cycle (Tp) estimated on the basis of detection by a G sensor (2b) and a second rotation cycle (Ta) estimated on the basis of a detection value from a wheel speed sensor (8) is no more than a prescribed value (a), the rotation position of each wheel corresponding to a wireless signal sent at a prescribed rotation position is used in wheel position determination; and when the deviation exceeds the prescribed value (a), the rotation position of each wheel corresponding to a wireless signal sent at a rotation position outside the prescribed rotation position is not used in wheel position determination.

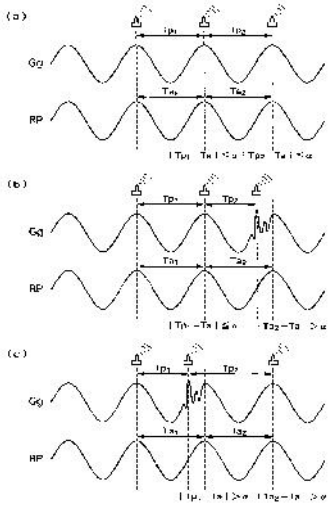

No. of Pages : 40 No. of Claims : 3

(12) PATENT APPLICATION PUBLICATION
(19) INDIA
(22) Date of filing of Application :28/02/2013
(21) Application No.536/KOLNP/2013 A
(43) Publication Date : 05/07/2013

(54) Title of the invention : TRANSVERSE MAGNETIC MODE DIELECTRIC RESONATOR, TRANSVERSE MAGNETIC MODE DIELECTRIC FILTER, AND BASE STATION

(51) International classification	:H01P7/10,H01P1/201,H04W88/08
(31) Priority Document No	:201010276357.4
(32) Priority Date	:03/09/2010
(33) Name of priority country	:China
(86) International Application No	:PCT/CN2011/075294
Filing Date	:03/06/2011
(87) International Publication No	:WO 2011/147354
(61) Patent of Addition to Application Number	:NA
Filing Date	:NA
(62) Divisional to Application Number	:NA
Filing Date	:NA

(71)**Name of Applicant :**
1)HUAWEI TECHNOLOGIES CO., LTD.
Address of Applicant :HUAWEI ADMINISTRATION BUILDING,BANTIAN,LONGGANG DISTRICT, SHENZHEN,GUANGDONG 518129 China
(72)**Name of Inventor :**
1)MAO, YAN
2)CAI,LEI
3)ZHU,YUNTAO
4)OU,SHENGJUN

(57) Abstract :
The present invention discloses a transverse magnetic mode dielectric resonator, transverse magnetic mode dielectric filter and base station. Said transverse magnetic mode dielectric resonator comprises a resonant cavity (201) with an opening at one end, a thin cover board (203) covering said opening and a thick cover board (204) covering said thin cover board (203) and the surfaces of said thin cover board (203) and thick cover board (204) are both covered with conductive material. A slot is provided on the surface of said thick cover board (204) contacting with said thin cover board (203) and said slot is filled with a filler (205) for when said thick cover board (204) covers said thin cover board (203) causing said thin cover board (203) to generate elastic deformation. The present invention has advantages of a good contact between contact surfaces , convenient assembly , good structure stability and strong realizability , thereby being suitable for mass production and having good mass production consistency.

No. of Pages : 26 No. of Claims : 10

(12) PATENT APPLICATION PUBLICATION
(19) INDIA
(22) Date of filing of Application :05/03/2013

(21) Application No.602/KOLNP/2013 A
(43) Publication Date : 05/07/2013

(54) Title of the invention : BORON-CONTAINING SMALL MOLECULES

(51) International classification :A61K31/69,C07F5/02,A61P31/04
(31) Priority Document No :61/380,596
(32) Priority Date :07/09/2010
(33) Name of priority country :U.S.A.
(86) International Application No :PCT/US2011/050728
Filing Date :07/09/2011
(87) International Publication No :WO 2012/033858
(61) Patent of Addition to Application Number :NA
Filing Date :NA
(62) Divisional to Application Number :NA
Filing Date :NA

(71)**Name of Applicant :**
1)ANACOR PHARMACEUTICALS, INC.
Address of Applicant :1020 East Meadow Circle, Palo Alto, CA 94303 U.S.A.
(72)**Name of Inventor :**
1)HERNANDEZ, Vincent, S.
2)DING, Charles
3)PLATTNER, Jacob, J.
4)ALLEY, Michael Richard, Kevin
5)ROCK, Fernando
6)ZHANG, Suoming
7)EASOM, Eric
8)LI, Xianfeng
9)ZHOU, Ding

(57) Abstract :
This invention relates to, among other items, benzoxaborole compounds and their use for treating bacterial infection.

Compound	[illegible]	[illegible]	[illegible]	[illegible]	[illegible]	[illegible]	[illegible]	[illegible]
A	16	8	8	8	20	0.77	>64	0.97
B	>64	>64		>64	>64	0.025	>64	[illegible]
C	8		1	1	[illegible]	0.25	0.22	0.79
D	>64	>64	[illegible]	>64	>64	[illegible]	[illegible]	[illegible]
E	>64	>64	1	>64	>64	0.53	0.70	0.25
F	[illegible]	>64	[illegible]	>64	[illegible]	[illegible]	[illegible]	[illegible]
G	8	16	[illegible]	8	>64	[illegible]	[illegible]	[illegible]
H	[illegible]	>64	[illegible]	>64	[illegible]	[illegible]	[illegible]	[illegible]
I	>64	>64	[illegible]	>64	>64	2.00	[illegible]	[illegible]
J	[illegible]	>64	NT	>64	>64	0.59	0.59	0.73
K	[illegible]	>64	>64	>64	[illegible]	>64	[illegible]	NT
L	[illegible]	64	0.125	32	[illegible]	[illegible]	[illegible]	0.03
M	[illegible]	>64	[illegible]	>64	[illegible]	NT	[illegible]	[illegible]
N	[illegible]	0.5	NT	1	2	NT	NT	0.07
O	[illegible]	[illegible]	[illegible]	[illegible]	[illegible]	[illegible]	>64	[illegible]
P	32	[illegible]	[illegible]	8	32	[illegible]	>64	[illegible]
Q	[illegible]	[illegible]	[illegible]	[illegible]	[illegible]	[illegible]	>64	[illegible]
R	>64	[illegible]	[illegible]	[illegible]	[illegible]	[illegible]	>64	[illegible]
S	[illegible]	[illegible]	[illegible]	[illegible]	[illegible]	[illegible]	[illegible]	[illegible]
T	[illegible]	[illegible]	[illegible]	[illegible]	[illegible]	NT	[illegible]	[illegible]
U	[illegible]	[illegible]	[illegible]	[illegible]	[illegible]	[illegible]	2.00	NT
V	>64	>64	[illegible]	>64	>64	NT	[illegible]	[illegible]

No. of Pages : 128 No. of Claims : 20

(12) PATENT APPLICATION PUBLICATION
(21) Application No.603/KOLNP/2013 A
(19) INDIA
(22) Date of filing of Application :05/03/2013
(43) Publication Date : 05/07/2013

(54) Title of the invention : GRAPHENE-SULFUR NANOCOMPOSITES FOR RECHARGEABLE LITHIUM-SULFUR BATTERY ELECTRODES

(51) International classification :H01M4/583,H01M4/58,H01M4/60
(31) Priority Document No :61/390,945
(32) Priority Date :07/10/2010
(33) Name of priority country :U.S.A.
(86) International Application No :PCT/US2011/041186
Filing Date :21/06/2011
(87) International Publication No :WO 2012/047329
(61) Patent of Addition to Application Number :NA
Filing Date :NA
(62) Divisional to Application Number :NA
Filing Date :NA

(71)**Name of Applicant :**
1)BATTELLE MEMORIAL INSTITUTE
Address of Applicant :Intellectual Property Legal Services, P.O. Box 999, M/S K1-53, Richland, Washington 99352 U.S.A.
(72)**Name of Inventor :**
1)LIU, Jun
2)LEMMON, John P.
3)YANG, Zhenguo
4)CAO, Yuliang
5)LI, Xiaolin

(57) Abstract :
Rechargeable lithium-sulfur batteries having a cathode that includes a graphene-sulfur nanocomposite can exhibit improved characteristics. The graphene-sulfur nanocomposite can be characterized by graphene sheets with particles of sulfur adsorbed to the graphene sheets. The sulfur particles have an average diameter less than 50 nm.

No. of Pages : 20 No. of Claims : 23

(12) PATENT APPLICATION PUBLICATION
(21) Application No.650/KOLNP/2013 A
(19) INDIA
(22) Date of filing of Application :08/03/2013
(43) Publication Date : 05/07/2013

(54) Title of the invention : APPARATUS FOR ROTATING THE NACELLE OF A WIND TURBINE

(51) International classification :F03D7/02
(31) Priority Document No :10 2010 054 153.2
(32) Priority Date :10/12/2010
(33) Name of priority country :Germany
(86) International Application No :PCT/EP2011/005764
Filing Date :16/11/2011
(87) International Publication No :WO 2012/076113
(61) Patent of Addition to Application Number :NA
Filing Date :NA
(62) Divisional to Application Number :NA
Filing Date :NA

(71)**Name of Applicant :**
1)REPOWER SYSTEMS SE
Address of Applicant :Überseering 10, 22297 Hamburg, Germany
(72)**Name of Inventor :**
1)TREDE Alf
2)BRÜCKNER Matthias

(57) Abstract :
The invention relates to an apparatus for the controlled rotation of a machine pod (102) of a wind power plant having a control device (400) and having a plurality of azimuth motors (128) wherein the apparatus furthermore has a plurality, amounting to n in number, of yaw brakes (130, B, B1-B8), wherein the control device (400) is designed for standstill operation and for tracking operation, wherein in standstill operation, the n yaw brakes (130, B, B1- B8) are actuated so as to impart a standstill holding moment, for holding the machine pod (102) wherein here, the yaw brakes (130, B, B1- B8) impart in each case a substantially equal first holding moment and wherein in tracking operation, the n yaw brakes (130, B, B1- B8) are actuated so as to impart a tracking holding moment, wherein the tracking holding moment, is lower than the standstill holding moment M1 (M1 > M2) and is also lower than the overall moment generated by the azimuth motors (128) in tracking operation and is characterized in that the control device (400) in tracking operation, actuates a number m of the n yaw brakes (130, B, B1- B8) in each case so as to generate substantially the same constant holding moment M3 wherein M1/n >M3 >M2/n, and wherein the other (n-m) yaw brakes (130, B, B1- B8) are actuated in each case so as to generate substantially the same constant holding moment M4, wherein mM3+ (n-m)M4=M2, and M1/n >M2/n >M4 .

No. of Pages : 40 No. of Claims : 12

(12) PATENT APPLICATION PUBLICATION
(19) INDIA
(22) Date of filing of Application :01/03/2013
(21) Application No.559/KOLNP/2013 A
(43) Publication Date : 05/07/2013

(54) Title of the invention : METHODS FOR INHIBITING CELL PROLIFERATION IN EGFR-DRIVEN CANCERS

(51) International classification :A01N43/54,A61K31/505
(31) Priority Document No :61/393,291
(32) Priority Date :14/10/2010
(33) Name of priority country :U.S.A.
(86) International Application No :PCT/US2011/056457
Filing Date :14/10/2011
(87) International Publication No :WO 2012/051587
(61) Patent of Addition to Application Number :NA
Filing Date :NA
(62) Divisional to Application Number :NA
Filing Date :NA

(71)**Name of Applicant :**
1)ARIAD PHARMACEUTICALS, INC.
Address of Applicant :26 Landsdowne Street, Cambridge, MA 02139 U.S.A.
(72)**Name of Inventor :**
1)DALGARNO, David, C.
2)SHAKEPEARE, William, C.
3)ZHU, Xiaotian
4)RIVERA, Victor, M.
5)MIRET, Juan, J.

(57) Abstract :
The invention features a method for treating patients who have an EGFR-driven cancer, which is or has become, refractory to a tyrosine kinase inhibitor, such as eriotinib and gefitinib, by administering a compound of formula (I) to the patient. The invention also features treating EGFR driven cancers having an EGFR mutation identified herein.

No. of Pages : 57 No. of Claims : 24

(12) PATENT APPLICATION PUBLICATION
(19) INDIA
(22) Date of filing of Application :05/03/2013
(21) Application No.604/KOLNP/2013 A
(43) Publication Date : 05/07/2013

(54) Title of the invention : MOBILE TERMINAL DEVICE, AND WIRELESS COMMUNICATION METHOD

(51) International classification :H04J99/00,H04B7/04,H04W16/28
(31) Priority Document No :2010-181789
(32) Priority Date :16/08/2010
(33) Name of priority country :Japan
(86) International Application No :PCT/JP2011/068398
Filing Date :11/08/2011
(87) International Publication No :WO 2012/023500
(61) Patent of Addition to Application Number :NA
Filing Date :NA
(62) Divisional to Application Number :NA
Filing Date :NA

(71)**Name of Applicant :**
1)NTT DOCOMO, INC.
Address of Applicant :11-1, Nagatacho 2-chome, Chiyoda-ku, Tokyo 1006150 Japan
(72)**Name of Inventor :**
1)KAKISHIMA, Yuichi
2)TAOKA, Hidekazu
3)KUSUME, Katsutoshi

(57) Abstract :
To provide a wireless communication method and a mobile terminal device capable of feeding back a precoder needed in generating a precoding weight in a downlink MIMO transmission. The present invention is characterized in that in a first mode in which a subband second PMI selected by each Bandwidth part is fed back via a physical uplink control channel, the subband second PMI and a wideband second PMI are selected from a second code book the subband second PMI and the wideband second PMI are multiplexed into a sub frame and the multiplexed signal is sent to a wireless base station device via the aforementioned physical uplink control channel.

No. of Pages : 43 No. of Claims : 11

(12) PATENT APPLICATION PUBLICATION
(21) Application No.605/KOLNP/2013 A
(19) INDIA
(22) Date of filing of Application :05/03/2013
(43) Publication Date : 05/07/2013

(54) Title of the invention : SAMPLING DEVICE AND METHOD FOR PREPARING THE SAME

(51) International classification :A61B10/02
(31) Priority Document No :2003379
(32) Priority Date :21/08/2009
(33) Name of priority country :Netherlands
(86) International Application No :PCT/NL2010/050515
Filing Date :17/08/2010
(87) International Publication No :WO 2011/021931
(61) Patent of Addition to Application Number :NA
Filing Date :NA
(62) Divisional to Application Number :NA
Filing Date :NA

(71)**Name of Applicant :**
1)ROVERS HOLDING B.V.
Address of Applicant :10, Lekstraat, NL-5347 KV Oss The Netherlands
(72)**Name of Inventor :**
1)ZWART, Meindert, Durk

(57) Abstract :
The present invention relates to a sampling device for sampling a body cavity, in particular for sampling the vagina and/or cervix. The sampling device comprises a tube having two open ends, a sample collecting member and a plunger. The plunger is inserted in the tube, with the distal plunger end protruding from the distal tube end and carries the sample collecting member at the proximal tube end. The plunger is displaceable in the proximal direction in the tube from a retracted introduction position into an extended sampling position. In the introduction position, the sampling member is situated inside the tube and protrudes from the tube in the sampling position.

No. of Pages : 40 No. of Claims : 22

(12) PATENT APPLICATION PUBLICATION
(21) Application No.652/KOLNP/2013 A
(19) INDIA
(22) Date of filing of Application :08/03/2013
(43) Publication Date : 05/07/2013

(54) Title of the invention : VEHICLE HAVING A COMPONENT COOLED BY MEANS OF A COOLING AIR MASS FLOW

(51) International classification :B60H1/00,B61D27/00
(31) Priority Document No :10 2010 041 440.9
(32) Priority Date :27/09/2010
(33) Name of priority country :Germany
(86) International Application No :PCT/EP2011/066487
Filing Date :22/09/2011
(87) International Publication No :WO 2012/041758
(61) Patent of Addition to Application Number :NA
Filing Date :NA
(62) Divisional to Application Number :NA
Filing Date :NA

(71)**Name of Applicant :**
1)SIEMENS AKTIENGESELLSCHAFT
Address of Applicant :Wittelsbacherplatz 2, 80333 München, Germany
(72)**Name of Inventor :**
1)ELSENHEIMER, Frank
2)BRENDEL, Thomas
3)RÜTER, Arnd

(57) Abstract :
The invention relates to a vehicle having at least one component (K) which, for cooling purposes, is impinged on by a cooling air mass flow delivered by means of at least one delivery device such as a fan (L) or spoiler, for which cooling air mass flow a setpoint value is predetermined which, for an assumed maximum thermal loading of the at least one component (K), provides a cooling action adequate for the operation of said component, wherein a control device (S) is provided for controlling an intensity of the cooling air mass flow and is designed such that the cooling air mass flow is dimensioned, taking into consideration thermal demands of the component (K) at least in an upper driving speed range, such that a sum of a power consumption of the at least one component (K), of the at least one delivery device and of a fraction, allotted to the delivery of the cooling air mass flow, of a traction power of the vehicle is smaller than a sum of the power consumption of the at least one component (K) of the at least one delivery device and of a fraction, allotted to the delivery of the cooling air mass flow at the predetermined setpoint value thereof, of a traction power of the vehicle.

No. of Pages : 27 No. of Claims : 28

(12) PATENT APPLICATION PUBLICATION
(19) INDIA
(22) Date of filing of Application :08/03/2013
(21) Application No.653/KOLNP/2013 A
(43) Publication Date : 05/07/2013

(54) Title of the invention : REINFORCING AND LOCKING DEVICE FOR VEHICLE FRAME

(51) International classification :B62K15/00
(31) Priority Document No :201010280472.9
(32) Priority Date :08/09/2010
(33) Name of priority country :China
(86) International Application No :PCT/CN2011/071373
Filing Date :28/02/2011
(87) International Publication No :WO 2012/031472
(61) Patent of Addition to Application Number :NA
Filing Date :NA
(62) Divisional to Application Number :NA
Filing Date :NA

(71)**Name of Applicant :**
1)DAHON TECHNOLOGIES, LTD.
Address of Applicant :Bldg. 1-5, Xinyang Section, Furong Industrial Zone, Shajing Town, Bao An, Shenzhen City, Guangdong 518125 China
(72)**Name of Inventor :**
1)HON, David, Tak-Wei
2)LI, Zheng
3)MO, Yiping

(57) Abstract :
A vehicle frame reinforcing and locking device comprises a vehicle beam (1) and a seat tube (3). Said vehicle beam (1) can be folded into at least two segments (11, 12). A hinge axle (81) through which various segments of the vehicle beam (1) are hinged with each other, is provided along the perpendicular direction. A reinforcement arm (2) is connected to the vehicle beam (1) and the seat tube (3), which is provided with a connecting device (32). The front end of said reinforcement arm (2) is hinged with the front segment (11) of the vehicle beam (1), and the tail end of the reinforcement arm (2) is connected with the seat tube (3) through the connecting device (32). The reinforcement arm (2) is locked by a locking device so that the position of the tail end of the reinforcement arm (2) after connected is deviated horizontally to the side of the hinge axle (81) of said vehicle beam (1) compared with an original position in natural connection. The vehicle frame reinforcing and locking device can rapidly fold or open the vehicle body, enhance the beam intensity and enable the foldable joining surface of the vehicle beam (1) with pre tightening force, thereby achieving a reinforcing and locking device with good stability, simple structure and low cost.

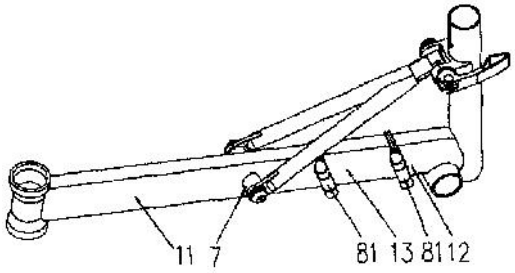

No. of Pages : 31 No. of Claims : 13

(12) PATENT APPLICATION PUBLICATION
(21) Application No.521/KOLNP/2013 A
(19) INDIA
(22) Date of filing of Application :27/02/2013
(43) Publication Date : 05/07/2013

(54) Title of the invention : DEGRADING AGENT COMPOSITIONS FOR TEMPORARY WET STRENGTH SYSTEMS IN TISSUE PRODUCTS

(51) International classification :D21H21/20
(31) Priority Document No :12/894,603
(32) Priority Date :30/09/2010
(33) Name of priority country :U.S.A.
(86) International Application No :PCT/US2011/048943
Filing Date :24/08/2011
(87) International Publication No :WO 2012/044416
(61) Patent of Addition to Application Number :NA
Filing Date :NA
(62) Divisional to Application Number :NA
Filing Date :NA

(71)**Name of Applicant :**
1)KEMIRA OYJ
Address of Applicant :LUOTEISRINNE 2, FI-02271 ESPOO Finland
(72)**Name of Inventor :**
1)ROSENCRANCE, SCOTT
2)LUO, YUPING
3)GRIGORIEV, VLADIMIR

(57) Abstract :
A degrading agent composition for use in manufacturing a tissue product generally includes a degrading agent a degradation inhibiting carrier, and a non-ionic surfactant. The non-ionic surfactant stabilizes the viscosity of the composition as a function of time. The degrading agent composition can be used in combination with a temporary wet strength agent to produce a tissue product exhibiting high initial wet tensile strength and desirable decay properties. Processes for forming the tissue product and pumpable fluids containing the degrading agent composition are also disclosed.

No. of Pages : 17 No. of Claims : 25

(12) PATENT APPLICATION PUBLICATION
(19) INDIA
(22) Date of filing of Application :27/02/2013
(21) Application No.522/KOLNP/2013 A
(43) Publication Date : 05/07/2013

(54) Title of the invention : APPARATUS FOR INTRODUCING AIR AND/OR SEALANT INTO A TIRE

(51) International classification :B29C73/16,B29L30/00,B60S5/04
(31) Priority Document No :102011018927.0
(32) Priority Date :28/04/2011
(33) Name of priority country :Germany
(86) International Application No :PCT/EP2012/053328
Filing Date :28/02/2012
(87) International Publication No :WO 2012/146413
(61) Patent of Addition to Application Number :NA
Filing Date :NA
(62) Divisional to Application Number :NA
Filing Date :NA

(71)**Name of Applicant :**
1)SUMITOMO RUBBER INDUSTRIES, LTD.
Address of Applicant :6-9,WAKINOHAMA-CHO 3-CHOME, CHUO-KU, KOBE-SHI, HYOGO 651-0072 Japan
(72)**Name of Inventor :**
1)ECKHARDT, ARNOLD

(57) Abstract :
An apparatus for introducing air and/or sealant into a tire includes a container for the sealant which has an inlet and an outlet and a pressure generating means,wherein the inlet of the container is connectable to the pressure generating means and the outlet of the container (14) is connected or connectable to the inlet end (24) of a hose (20) whose outlet end is connectable to the tire to be filled. A latchable coupling is provided for connecting the pressure generation means to the inlet of the container with two latching levers (50) provided at the container (14) being designed to release the locking connection of the coupling on a movement of the respective free lever ends toward one another.

No. of Pages : 24 No. of Claims : 21

(12) PATENT APPLICATION PUBLICATION
(19) INDIA
(22) Date of filing of Application :06/03/2013
(21) Application No.610/KOLNP/2013 A
(43) Publication Date : 05/07/2013

(54) Title of the invention : UNLOCKING CONTROLLER OF IRREVERSIBLE ROTARY TRANSMISSION SYSTEM

(51) International classification :F16D41/08,B60K17/344
(31) Priority Document No :2011-099076
(32) Priority Date :27/04/2011
(33) Name of priority country :Japan
(86) International Application No :PCT/JP2012/054195
Filing Date :22/02/2012
(87) International Publication No :WO 2012/147399
(61) Patent of Addition to Application Number :NA
Filing Date :NA
(62) Divisional to Application Number :NA
Filing Date :NA

(71)**Name of Applicant :**
1)NISSAN MOTOR CO., LTD.
Address of Applicant :2, Takara-cho, Kanagawa-ku Yokohama-shi, Kanagawa 221-0023, Japan
(72)**Name of Inventor :**
1)MORI Kenichi
2)KANEKO Yutaka

(57) Abstract :
When unlocking a crankshaft to reversely rotate the crankshaft in a direction in which load torque is applied , large unlocking torque is necessary. Thus, for example, when the crankshaft is reversely rotated until the rotation angle (θ) thereof reaches a command value (tθ) as shown in the drawing rotation position control torque (Tm) is not set and only unlocking torque (TLoff) is set as motor torque for a period from an unlocking start time (t1) to an unlocking end time (t2) , and at the unlocking end time (t2), because TLoff=0 , only rotation position control torque (Tm) is set as motor torque. Otherwise due to interference between Tm and TLoff unlocking is delayed as shown by a bold dashed line. However since motor torque is set to Tm during the time period from t1 to t2 problems related to unlocking delay can be solved.

No. of Pages : 59 No. of Claims : 6

(12) PATENT APPLICATION PUBLICATION
(19) INDIA
(22) Date of filing of Application :06/03/2013
(21) Application No.611/KOLNP/2013 A
(43) Publication Date : 05/07/2013

(54) Title of the invention : ROTARY ELECTRIC MACHINE ROTOR

(51) International classification :H02K1/27
(31) Priority Document No :NA
(32) Priority Date :NA
(33) Name of priority country :NA
(86) International Application No :PCT/IB2010/002250
Filing Date :10/09/2010
(87) International Publication No :WO 2012/032369
(61) Patent of Addition to Application Number :NA
Filing Date :NA
(62) Divisional to Application Number :NA
Filing Date :NA

(71)**Name of Applicant :**
1)NISSAN MOTOR CO., LTD.
Address of Applicant :2, Takara-cho, Kanagawa-ku Yokohama-shi, Kanagawa 221-0023, Japan
2)WISCONSIN ALUMNI RESEARCH FOUNDATION
(72)**Name of Inventor :**
1)SHIBUKAWA Yuichi
2)LORENZ Robert Donald
3)LIMSUWAN Natee

(57) Abstract :
A rotary electric machine rotor is provided with a rotor shaft (10), a rotor core (20), and a group (30) of permanent magnets (31). The rotor core (20) includes a group (21) of flux barriers (211) arranged at intervals. At least one of the flux barriers (211) includes at least one bridge (212) joining an inner edge (21 Ia) and an outer edge (21 Ib) of that flux barriers (211). The permanent magnets (31) are arranged at the rotor core (20) between the flux barriers (211) as viewed in the cross sectional plane.

No. of Pages : 29 No. of Claims : 20

(12) PATENT APPLICATION PUBLICATION
(21) Application No.659/KOLNP/2013 A
(19) INDIA
(22) Date of filing of Application :08/03/2013
(43) Publication Date : 05/07/2013

(54) Title of the invention : A LOW-FIELD NMR DEVICE FOR MEASURING THE WATER CONTENT OF SOLIDS AND SLURRIES

(51) International classification :G01N24/08,G01N33/44
(31) Priority Document No :20105917
(32) Priority Date :31/08/2010
(33) Name of priority country :Finland
(86) International Application No :PCT/FI2011/050753
Filing Date :30/08/2011
(87) International Publication No :WO 2012/028785
(61) Patent of Addition to Application Number :NA
Filing Date :NA
(62) Divisional to Application Number :NA
Filing Date :NA

(71)**Name of Applicant :**
1)METSO AUTOMATION OY
Address of Applicant :Vanha Porvoontie 229, FI-01380 Vantaa Finland
(72)**Name of Inventor :**
1)VIRTANEN, Sami
2)VIITANEN, Veli-Pekka

(57) Abstract :
The invention relates to a Nuclear Magnetic Resonance (NMR) apparatus and method for measuring the water content of samples. The apparatus comprises means for producing a main magnetic field; a sample receiving space within said main magnetic field; means for exciting a measurable RF magnetization to a sample placed into said sample receiving space at an operating frequency defined by said main magnetic field; means for measuring the RF signal produced by the excited sample; and means for determining the water content in the sample based on the RF signal. According to the invention, the sample receiving space is capable of accommodating a sample having a volume of at least 0.5 dm3, and the means for producing a main magnetic field comprise a resistive electromagnet which is adapted to produce a main magnetic field corresponding to an operating frequency of 400 2000 kHz. By means of the invention more cost efficient and lightweight NMR apparatuses for humidity measurement purposes can be built.

No. of Pages : 21 No. of Claims : 15

(12) PATENT APPLICATION PUBLICATION
(19) INDIA
(22) Date of filing of Application :01/03/2013

(21) Application No.562/KOLNP/2013 A
(43) Publication Date : 05/07/2013

(54) Title of the invention : PEGYLATED LIPOSOMES FOR DELIVERY OF IMMUNOGEN-ENCODING RNA

(51) International classification :A61K39/39,A61K9/127
(31) Priority Document No :61/378,826
(32) Priority Date :31/08/2010
(33) Name of priority country :U.S.A.
(86) International Application No :PCT/US2011/050095
Filing Date :31/08/2011
(87) International Publication No :WO 2012/031043
(61) Patent of Addition to Application Number :NA
Filing Date :NA
(62) Divisional to Application Number :NA
Filing Date :NA

(71)**Name of Applicant :**
1)NOVARTIS AG
Address of Applicant :Lichtstrasse 35, CH-4056 Basel Switzerland
(72)**Name of Inventor :**
1)GEALL, Andrew
2)VERMA, Ayush

(57) Abstract :
Nucleic acid immunisation is achieved by delivering RNA encapsulated within a PEGylated liposome. The RNA encodes an immunogen of interest. The PEG has an average molecular mass of between lkDa and 3kDa. Thus the invention provides a liposome having a lipid bilayer encapsulating an aqueous core, wherein: (i) the lipid bilayer comprises at least one lipid which includes a polyethylene glycol moiety, such that polyethylene glycol is present on the liposome s exterior, wherein the average molecular mass of the polyethylene glycol is between lkDa and 3kDa; and (ii) the aqueous core includes a RNA which encodes an immunogen. These liposomes are suitable for in vivo delivery of the RNA to a vertebrate cell and so they are useful as components in pharmaceutical compositions for immunising subjects against various diseases.

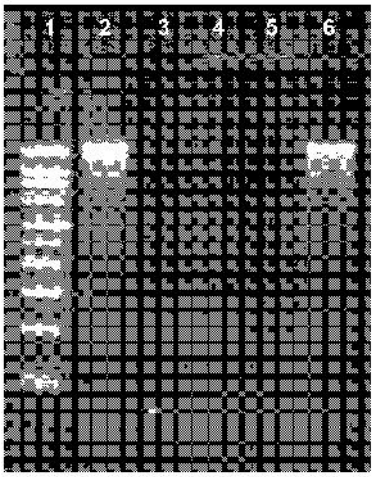

No. of Pages : 72 No. of Claims : 12

(12) PATENT APPLICATION PUBLICATION
(21) Application No.608/KOLNP/2013 A
(19) INDIA
(22) Date of filing of Application :06/03/2013
(43) Publication Date : 05/07/2013

(54) Title of the invention : AEROSOL TRIGGER SPRAYER AND METHODS FOR MAKING THE SAME

(51) International classification :B05B11/00,B65D83/20
(31) Priority Document No :61/376,007
(32) Priority Date :23/08/2010
(33) Name of priority country :U.S.A.
(86) International Application No :PCT/US2011/048774
Filing Date :23/08/2011
(87) International Publication No :WO 2012/027344
(61) Patent of Addition to Application Number :NA
Filing Date :NA
(62) Divisional to Application Number :NA
Filing Date :NA

(71)**Name of Applicant :**
1)MEADWESTVACO CALMAR, INC.
Address of Applicant :501 South 5th Street, Richmond, Virginia 23219-0501, U.S.A
(72)**Name of Inventor :**
1)SELL, Steven, A.

(57) Abstract :
An aerosol trigger actuator having two or three parts includes one or more living hinges allowing the two or three parts to act together to release a product from a container.

No. of Pages : 19 No. of Claims : 14

(12) PATENT APPLICATION PUBLICATION
(19) INDIA
(22) Date of filing of Application :06/03/2013

(21) Application No.609/KOLNP/2013 A
(43) Publication Date : 05/07/2013

(54) Title of the invention : BATTERY CONTROL DEVICE

(51) International classification :H02J7/02,H01M10/04,H01M10/44
(31) Priority Document No :2010-190797
(32) Priority Date :27/08/2010
(33) Name of priority country :Japan
(86) International Application No :PCT/JP2011/067756
Filing Date :03/08/2011
(87) International Publication No :WO 2012/026295
(61) Patent of Addition to Application Number :NA
Filing Date :NA
(62) Divisional to Application Number :NA
Filing Date :NA

(71)**Name of Applicant :**
1)NISSAN MOTOR CO., LTD.
Address of Applicant :2, Takara-cho, Kanagawa-ku Yokohama-shi, Kanagawa 221-0023, Japan
(72)**Name of Inventor :**
1)KATO Yukinari
2)ABE Takaaki
3)MIYAZAKI Yasuhito
4)SHIMOIDA Yoshio

(57) Abstract :
Provided is a battery control device characterised by: using a discharge to adjust the capacitance of cells that form a bipolar battery and calculating the voltage increase value of the remaining cells that do not discharge to adjust capacitance if one or more cells among all of the cells that form the bipolar battery are discharged to adjust capacitance in a battery control device that controls voltage dispersion or volume dispersion between cells that form the bipolar battery; and setting the general discharge value when there is a discharge to adjust capacitance on the basis of the voltage increase value calculation results.

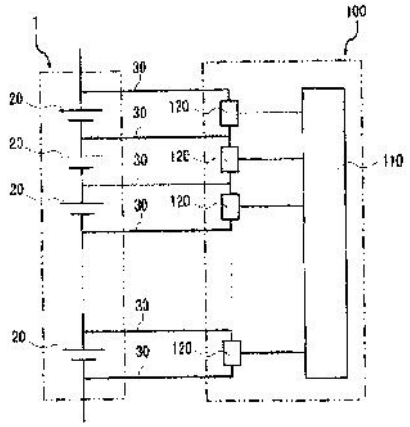

No. of Pages : 28 No. of Claims : 3

(12) PATENT APPLICATION PUBLICATION
(19) INDIA
(22) Date of filing of Application :08/03/2013
(21) Application No.656/KOLNP/2013 A
(43) Publication Date : 05/07/2013

(54) Title of the invention : MULTIPHASE SYSTEMS AND USES THEREOF

(51) International classification :B01D21/26,B03B5/28,B03B5/44
(31) Priority Document No :61/375,532
(32) Priority Date :20/08/2010
(33) Name of priority country :U.S.A.
(86) International Application No :PCT/US2011/048673
Filing Date :22/08/2011
(87) International Publication No :WO 2012/024688
(61) Patent of Addition to Application Number :NA
Filing Date :NA
(62) Divisional to Application Number :NA
Filing Date :NA

(71)**Name of Applicant :**
1)PRESIDENT AND FELLOWS OF HARVARD COLLEGE
Address of Applicant :17 Quincy Street, Cambridge, MA 02138 U.S.A.
(72)**Name of Inventor :**
1)MACE, Charles, R.
2)HALATCI, Ozge, Akbulut
3)KUMAR, Ashok, A.
4)SHAPIRO, Nathan, D.
5)WHITESIDES, George, M.

(57) Abstract :
A multi-phase system includes a phase-separated solution comprising at least two phases, each phase having a phase component selected from the group consisting of a polymer, a surfactant and combinations thereof, wherein at least one phase comprises a polymer, wherein the phases, taken together, represent a density gradient. Novel two-phase, three-phase, four-phase, five-phase or six-phase systems are disclosed. Using the disclosed multi phase polymer systems,particles, or other analyte of interest can be separated based on their different densities or affinities.

No. of Pages : 170 No. of Claims : 83

(12) PATENT APPLICATION PUBLICATION
(21) Application No.657/KOLNP/2013 A
(19) INDIA
(22) Date of filing of Application :08/03/2013
(43) Publication Date : 05/07/2013

(54) Title of the invention : METHOD OF INCREASING FILM TEAR STRENGTH

(51) International classification :A61B17/04,B29D7/01
(31) Priority Document No :61/381,286
(32) Priority Date :09/09/2010
(33) Name of priority country :U.S.A.
(86) International Application No :PCT/US2011/050931
Filing Date :09/09/2011
(87) International Publication No :WO 2012/033977
(61) Patent of Addition to Application Number :NA
Filing Date :NA
(62) Divisional to Application Number :NA
Filing Date :NA

(71)**Name of Applicant :**
1)W. L. GORE & ASSOCIATES, INC.
Address of Applicant :555 Paper Mill Road Newark, DE 19711 U.S.A.
(72)**Name of Inventor :**
1)TOWLER, Jeffrey

(57) Abstract :
A method of increasing the tensile strength of polymer films is provided. The creation of the load distribution elements (50) in polymer films (10) necessary to achieve this result is described. Application of the present invention to increase suture retention in a surgical polymer film is also provided.

No. of Pages : 32 No. of Claims : 14

(12) PATENT APPLICATION PUBLICATION
(19) INDIA
(22) Date of filing of Application :08/03/2013
(21) Application No.658/KOLNP/2013 A
(43) Publication Date : 05/07/2013

(54) Title of the invention : POROUS ARTICLE WITH FUSED THERMOPLASTIC PARTICLES

(51) International classification	:B01D69/12,B01D39/16,B32B5/22
(31) Priority Document No	:12/879,333
(32) Priority Date	:10/09/2010
(33) Name of priority country	:U.S.A.
(86) International Application No	:PCT/US2011/050636
Filing Date	:07/09/2011
(87) International Publication No	:WO 2012/033804
(61) Patent of Addition to Application Number	:NA
Filing Date	:NA
(62) Divisional to Application Number	:NA
Filing Date	:NA

(71)**Name of Applicant :**
1)W. L. GORE & ASSOCIATES, INC.
Address of Applicant :555 Paper Mill Road Newark, DE 19711 U.S.A.
(72)**Name of Inventor :**
1)BACINO, John, E.

(57) Abstract :
Porous articles having an expanded fluoropolymer and a coherent irregular network are described. In one embodiment, the coherent irregular network is attached to the expanded fluoropolymer at only a portion of the adjacent region. In another aspect of the invention the coherent irregular network is a free standing film. The coherent irregular network in one embodiment has a surface roughness defined by an Sp value of greater than 35um.

No. of Pages : 58 No. of Claims : 38

(12) PATENT APPLICATION PUBLICATION
(19) INDIA
(22) Date of filing of Application :06/03/2013
(21) Application No.622/KOLNP/2013 A
(43) Publication Date : 05/07/2013

(54) Title of the invention : FIELD DEPLOYABLE CONCUSSION ASSESSMENT DEVICE

(51) International classification :A61B5/0476,A61B5/0484
(31) Priority Document No :12/857,504
(32) Priority Date :16/08/2010
(33) Name of priority country :U.S.A.
(86) International Application No :PCT/US2011/047533
Filing Date :12/08/2011
(87) International Publication No :WO 2012/024175
(61) Patent of Addition to Application Number :NA
Filing Date :NA
(62) Divisional to Application Number :NA
Filing Date :NA

(71)**Name of Applicant :**
1)BRAINSCOPE COMPANY, INC.
Address of Applicant :8120 Woodmont Avenue, Suite 250, Bethesda, MD 20814 U.S.A.
2)NEW YORK UNIVERSITY
(72)**Name of Inventor :**
1)PRICHEP, Leslie, S.
2)ROTHMAN, Neil, S.
3)OBERLY, Douglas, C.
4)SINGER, Michael, E.

(57) Abstract :
A device and method for assessment of traumatic brain injury (TBI) is described. The device is configured to acquire brain electrical signals from a patients forehead using one or more neurological electrodes. The acquired brain electrical activity data is subjected to artifact rejection and feature extraction,and a subset of features are then combined in at least one classifier function. The classifier functions statistically place a patient in one of four categories related to the extent of brain dysfunction: 1) normal brain electrical activity; 2) abnormal brain electrical activity consistent with non structural injury with less severe manifestations of functional brain injury; 3) abnormal brain electrical activity consistent with non structural injury with more severe manifestations of functional brain injury; and 4) abnormal brain electrical activity consistent with structural brain injury.

No. of Pages : 43 No. of Claims : 43

(12) PATENT APPLICATION PUBLICATION
(19) INDIA
(22) Date of filing of Application :06/03/2013

(21) Application No.623/KOLNP/2013 A
(43) Publication Date : 05/07/2013

(54) Title of the invention : SUSTAINABLE PROCESS FOR RECLAIMING PRECIOUS METALS AND BASE METALS FROM E-WASTE

(51) International classification :C22B11/00,C22B7/00
(31) Priority Document No :61/375,273
(32) Priority Date :20/08/2010
(33) Name of priority country :U.S.A.
(86) International Application No :PCT/US2011/048449
Filing Date :19/08/2011
(87) International Publication No :WO 2012/024603
(61) Patent of Addition to Application Number :NA
Filing Date :NA
(62) Divisional to Application Number :NA
Filing Date :NA

(71)**Name of Applicant :**
1)ADVANCED TECHNOLOGY MATERIALS, INC.
Address of Applicant :7 Commerce Drive, Danbury, Connecticut 06810 U.S.A.
(72)**Name of Inventor :**
1)KORZENSKI, Michael B.
2)JIANG, Ping
3)NORMAN, James
4)WARNER, John
5)INGALLS, Laura
6)GNANAMGARI, Dinakar
7)STRICKLER, Fred
8)MENDUM, Ted

(57) Abstract :
Processes for recycling electronic components removed from printed wire boards,whereby precious metals and base metals are extracted from the electronic components using environmentally friendly compositions. At least gold,silver and copper ions can be extracted from the electronic components and reduced to their respective metals using the processes and compositions described herein.

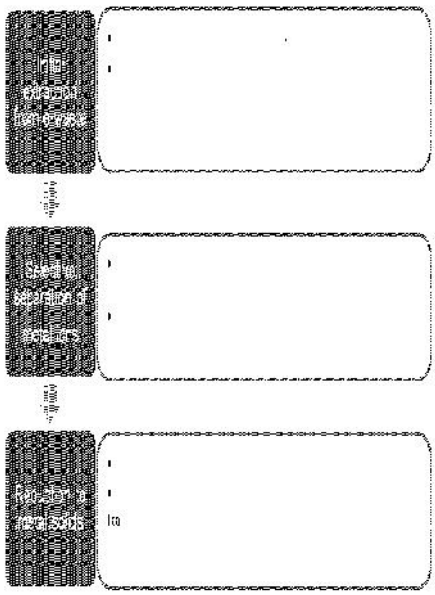

No. of Pages : 35 No. of Claims : 30

(12) PATENT APPLICATION PUBLICATION
(21) Application No.670/KOLNP/2013 A
(19) INDIA
(22) Date of filing of Application :11/03/2013
(43) Publication Date : 05/07/2013

(54) Title of the invention : SUPPORTED METALLOCENE CATALYSTS

(51) International classification :C08F4/44
(31) Priority Document No :12/882,268
(32) Priority Date :15/09/2010
(33) Name of priority country :U.S.A.
(86) International Application No :PCT/US2011/048631
Filing Date :22/08/2011
(87) International Publication No :WO 2012/036848
(61) Patent of Addition to Application Number :NA
Filing Date :NA
(62) Divisional to Application Number :NA
Filing Date :NA

(71)**Name of Applicant :**
1)FINA TECHNOLOGY, INC.
Address of Applicant :P.O. Box 674412, Houston, Texas 77267-3312, U.S.A
(72)**Name of Inventor :**
1)GAUTHIER, William
2)RAUSCHER, David
3)TIAN, Jun
4)WILLIAMS, Nathan

(57) Abstract :
Method employing a supported metallocene catalyst composition in the production of an isotactic ethylene propylene co-polymer. The composition comprises a metallocene component supported on a particulate silica support having average particle size of 10-40microns, a pore volume of 1.3-1.6 ml/g, a surface area of 200-400 m2/g. An alkylalumoxane co catalyst component is incorporated on the support. The isospecific metallocene is characterized by the formula (1): B (CpRaRb)(FlR2)MQn or by the formula (2): B(CpRaRb)(F1)MQn In the formulas Cp and Cp are substituted cyclopentadienyl groups F1 and F1 are fluorenyl groups, and B and B are structural bridges. R are substituents at the 2 and 7 positions, Ra and Ra are substituents distal to the bridge, and Rb and Rb are proximal to the bridge. M and M are transition metals, Q is a halogen or a C1-C4 alkyl group; and n is an integer of from 0-4.

No. of Pages : 36 No. of Claims : 41

(12) PATENT APPLICATION PUBLICATION
(19) INDIA
(22) Date of filing of Application :11/03/2013
(21) Application No.671/KOLNP/2013 A
(43) Publication Date : 05/07/2013

(54) Title of the invention : HANDLING DIFFERENT MULTIPLEXING CAPABILITY BETWEEN SHORTENED FORMAT AND NORMAL FORMAT FOR DFTS-OFDM PUCCH

(51) International classification :H04L5/00
(31) Priority Document No :61/375,658
(32) Priority Date :20/08/2010
(33) Name of priority country :U.S.A.
(86) International Application No :PCT/SE2011/050303
Filing Date :18/03/2011
(87) International Publication No :WO 2012/023892
(61) Patent of Addition to Application Number :NA
Filing Date :NA
(62) Divisional to Application Number :NA
Filing Date :NA

(71)**Name of Applicant :**
1)TELEFONAKTIEBOLAGET L M ERICSSON (PUBL)
Address of Applicant :S-164 83 Stockholm, Sweden
(72)**Name of Inventor :**
1)BALDEMAIR, Robert
2)CHENG, Jung-Fu
3)GERSTENBERGER, Dirk
4)LARSSON, Daniel
5)PARKVALL, Stefan

(57) Abstract :
The disclosure relates to a user equipment for a wireless communications system, and to a related method for identifying a resource to use for a transmission of control information on a physical uplink control channel, PUCCH, format 3. The method comprises receiving (610) a resource index from a serving radio base station, and identifying (620) the resource to use for the transmission of the control information in a subframe based on the received resource index, wherein the identified resource is within a same confined set of physical resource blocks regardless of if a normal or a shortened PUCCH format 3 is used in the subframe.

No. of Pages : 44 No. of Claims : 16

(12) PATENT APPLICATION PUBLICATION
(21) Application No.625/KOLNP/2013 A
(19) INDIA
(22) Date of filing of Application :06/03/2013
(43) Publication Date : 05/07/2013

(54) Title of the invention : MELT METALLURGICAL INSTALLATION COMPRISING A CHARGING ELEMENT

(51) International classification :C21C5/52,F27B3/18
(31) Priority Document No :10 2010 040 879.4
(32) Priority Date :16/09/2010
(33) Name of priority country :Germany
(86) International Application No :PCT/EP2011/062972
Filing Date :28/07/2011
(87) International Publication No :WO 2012/034766
(61) Patent of Addition to Application Number :NA
Filing Date :NA
(62) Divisional to Application Number :NA
Filing Date :NA

(71)**Name of Applicant :**
1)SIEMENS AKTIENGESELLSCHAFT
Address of Applicant :Wittelsbacherplatz 2, 80333 München, Germany
(72)**Name of Inventor :**
1)DORNDORF Markus
2)HUBER Hansjörg

(57) Abstract :
The invention relates to a melt metallurgical installation comprising a melting furnace (1) for melting scrap metal (2) and a charging region (3) for the melting furnace (1) which is located above the melting furnace (1). Said installation further comprises a charging element (4),which has been filled with scrap metal (2) intended for the melting furnace (1) and can be moved in a movement direction (x) into the charging region (3) where it can be emptied and then moved again in the empty state against the movement direction (x) out of the charging region (3). The charging region (3) is enclosed by a hood (5) such that the charging region (3) including the charging element (4) which has been placed in the charging region (3),is closed at the top and on the sides. The hood (5) comprises a plurality of upper extraction openings (7) through which the waste gases and dust developing in the hood (5) can be extracted out of the hood (5).

No. of Pages : 22 No. of Claims : 15

(12) PATENT APPLICATION PUBLICATION
(19) INDIA
(22) Date of filing of Application :11/03/2013
(21) Application No.672/KOLNP/2013 A
(43) Publication Date : 05/07/2013

(54) Title of the invention : AIR CONNECTOR FOR AN INTERNAL COMBUSTION ENGINE

(51) International classification :F02B21/00,F02M35/10
(31) Priority Document No :1018653.5
(32) Priority Date :03/11/2010
(33) Name of priority country :U.K.
(86) International Application No :PCT/IB2011/054853
Filing Date :02/11/2011
(87) International Publication No :WO 2012/059865
(61) Patent of Addition to Application Number :NA
Filing Date :NA
(62) Divisional to Application Number :NA
Filing Date :NA

(71)**Name of Applicant :**
1)BRUNEL UNIVERSITY
Address of Applicant :Kingston Lane, Uxbridge, Middlesex UB8 3PH, U.K.
(72)**Name of Inventor :**
1)MA, Thomas
2)ZHAO, Hua

(57) Abstract :
An air connector is described mountable opposite an intake or exhaust port in an associated intake or exhaust pipe of an internal combustion engine to allow the port to communicate selectively with the associated pipe and with a compressed air storage tank. The connector comprises a stopper mounted on a rod movable by an actuator between an open position in which the port communicates with the associated pipe and a closed position in which the stopper seals around the entrance of the port to isolate the port from the associated pipe. An air passage is provided in the stopper and the rod to allow communication between the port and the compressed air storage tank when the stopper is in the closed position, and a check valve is arranged in the air passage and biased in a direction to prevent escape of air from the compressed air storage tank in all positions of the stopper.

No. of Pages : 24 No. of Claims : 7

(12) PATENT APPLICATION PUBLICATION
(19) INDIA
(22) Date of filing of Application :11/03/2013

(21) Application No.673/KOLNP/2013 A
(43) Publication Date : 05/07/2013

(54) Title of the invention : METHOD FOR PRODUCING DISPERSION OF RUTILE-TYPE TITANIUM OXIDE PARTICLES

(51) International classification	:C01G23/053,C08K3/20,C08L101/00
(31) Priority Document No	:2010-182147
(32) Priority Date	:17/08/2010
(33) Name of priority country	:Japan
(86) International Application No	:PCT/JP2011/068813
Filing Date	:15/08/2011
(87) International Publication No	:WO 2012/023621
(61) Patent of Addition to Application Number	:NA
Filing Date	:NA
(62) Divisional to Application Number	:NA
Filing Date	:NA

(71)**Name of Applicant :**
1)Sakai Chemical Industry Co., Ltd.
Address of Applicant :5-2, Ebisujimacho, Sakai-ku, Sakai-shi, Osaka 590-8502 Japan
(72)**Name of Inventor :**
1)MORITA Takanori
2)NAKAGAWA Kenichi
3)NOMURA Atsushi

(57) Abstract :
Provided according to the present invention is a production method comprising: a first step for obtaining a slurry containing precipitated rutile-type titanium oxide particles by adjusting the chlorine ion concentration in an aqueous solution of titanium tetrachloride to 0.5 mol/L or greater and less than 4.4 mol/L and then raising the temperature in a range of 25- 75°C and hydrolyzing titanium tetrachloride; a second step for obtaining a slurry with the dissolved water soluble salts eliminated by filtering and washing in water the slurry obtained in the first step; a third step for hydrothermally reacting the slurry obtained in the second step in the presence of an organic acid; a fourth step for obtaining a slurry with the dissolved water soluble salts eliminated by filtering and washing the slurry obtained in the third step; a fifth step for obtaining a dispersion by adding an acid to the slurry obtained in the fourth step and, after deflocculation, carrying out a wet dispersion treatment; and a sixth step for eliminating surplus acid and water soluble salts from the dispersion obtained in the fifth step. According to this method of the present invention, a dispersion of high crystallinity rutile-type titanium oxide particles can be obtained with fine particles.

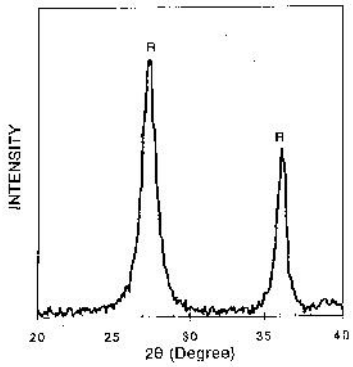

No. of Pages : 40 No. of Claims : 9

(12) PATENT APPLICATION PUBLICATION
(19) INDIA
(22) Date of filing of Application :11/03/2013
(21) Application No.674/KOLNP/2013 A
(43) Publication Date : 05/07/2013

(54) Title of the invention : REPLACEABLE HEAD PART FOR AN ELECTRIC TOOTHBRUSH

(51) International classification :A61C17/34,A61C17/22
(31) Priority Document No :1016209.7
(32) Priority Date :24/09/2010
(33) Name of priority country :U.K.
(86) International Application No :PCT/EP2011/066493
Filing Date :22/09/2011
(87) International Publication No :WO 2012/038501
(61) Patent of Addition to Application Number :NA
Filing Date :NA
(62) Divisional to Application Number :NA
Filing Date :NA

(71)**Name of Applicant :**
1)GLAXOSMITHKLINE CONSUMER HEALTHCARE GMBH & CO. KG
Address of Applicant :Bussmatten 1, Buehl, 77815 Baden Germany
(72)**Name of Inventor :**
1)REINBOLD, Klaus

(57) Abstract :
A replaceable head part (10) for an electric powered toothbrush comprising an elongate sleeve (11) including a flexible portion (19), and containing a longitudinal drive shaft (18) rotatable in oscillatory rotary motion. The drive shaft has a spherical bearing part (21) received in a cavity (22) in the sleeve. The head part incorporates a transmission system to convert the rotation of the head drive shaft into rotation of the bristle carrier (15) comprising an eccentric pin (23) extending from the head drive shaft to move the bristle carrier in oscillatory rotary motion, and having a spherical pin bearing part (24) received in a receiving cavity (25) in the bristle carrier.

No. of Pages : 18 No. of Claims : 16

(12) PATENT APPLICATION PUBLICATION
(19) INDIA
(22) Date of filing of Application :01/01/2013
(21) Application No.8/KOLNP/2013 A
(43) Publication Date : 05/07/2013

(54) Title of the invention : SHOCK WAVE RAPID DYEING MACHINE OF IMPULSE TYPE.

(51) International classification :D06B1/02,D06B1/08,D06B3/28
(31) Priority Document No :NA
(32) Priority Date :NA
(33) Name of priority country :NA
(86) International Application No:PCT/CN2010/001049
Filing Date :13/07/2010
(87) International Publication No :WO 2012/006759
(61) Patent of Addition to Application Number :NA
Filing Date :NA
(62) Divisional to Application Number :NA
Filing Date :NA

(71)**Name of Applicant :**
1)JIANG, Zhao-Cheng
Address of Applicant :No. 48, Qiaoxin Rd., Xindian City, Taipei County 231, Taiwan, P.R. China
(72)**Name of Inventor :**
1)JIANG, Zhao-Cheng

(57) Abstract :
A shock wave rapid dyeing machine of impulse type is provided. The dyeing machine comprises one or more side by side assembled treatment tanks (1). A fabric storage tank (2) used for folding the fabric and a fabric guide tube (11) used for accelerated moving the fabric are provided in the treatment tanks (1). The fabric storage tank (2) and the fabric guide tube (11) are communicated with each other end-to-end to define a wide circulating path, and in the path the fabric can be dyed or treated in other ways rapidly in a wide spread mode. Wherein, an air floating nozzle (122) composed of numbers of small holes is set on the lower pipe wall of the upstream and midstream segments along the path of the fabric guide tube (11). The air floating nozzle (122) is connected with a blower (16) by a floated distributing pipe (168) and an air delivery pipe system (71,160).A co-constructed nozzle (121) composed of a gas injecting pipe (12121) and a hydraulic atomizing nozzle (1216) is set on the cross section of the downstream segment of the fabric guide tube (11) and near the inlet of which. A row of co-constructed nozzles combined side by side can be connected with the blower (16) and a pressured cycling pumping (72) by a co-constructed distributing pipe (167), the air delivery pipe system (71,160) and a liquid delivery pipe system (120, 170). Under the action of the expansionary acceleration of the co-constructed nozzle (121), treatment mediums such as dyeing liquor are dispersed in a high speed airflow and thus dyeing or treatment in other ways can be done rapidly.

No. of Pages : 57 No. of Claims : 28

(12) PATENT APPLICATION PUBLICATION
(21) Application No.80/KOLNP/2013 A
(19) INDIA
(22) Date of filing of Application :10/01/2013
(43) Publication Date : 05/07/2013

(54) Title of the invention : DEVICE FOR FILLING GRANULAR, PULVERULENT AND FREE-FLOWING MATERIALS INTO A CONTAINER MADE OF GEOTEXTILE MATERIAL

(51) International classification :E02B3/10,B65B9/20
(31) Priority Document No :20 2010 008 093.2
(32) Priority Date :16/07/2010
(33) Name of priority country :Germany
(86) International Application No :PCT/EP2011/061961
Filing Date :13/07/2011
(87) International Publication No :WO 2012/007507
(61) Patent of Addition to Application Number :NA
Filing Date :NA
(62) Divisional to Application Number :NA
Filing Date :NA

(71)**Name of Applicant :**
1)DRAIER, Roland
Address of Applicant :Strangmühlenstraße 13, 33335 Gütersloh, Germany
(72)**Name of Inventor :**
1)DRAIER, Roland

(57) Abstract :
The invention relates to a device (1) for filling granular, pulverulent and free-flowing materials into a container (5), preferably a hose- and sack-shaped container, made of geotextile material, comprising a housing (6) that allows the advancement of the material and in which a conveying device is arranged, characterized in that on the entry side of said conveying device the material can be filled in and on the exit side thereof a hose (9) made of geotextile material receives the material. The hose (9) can be shaped on the jacket of the housing (6), which can be unwound as a web from a feeding device (12) that is designed like a roll (11), wherein the longitudinal sides of the web can be connected to each other by means of a device in the region of the jacket. According to the invention, the housing (6) consists of a tubular body (15) that extends perpendicular to the direction of advance and is arranged vertically, said tubular body interacting with a feeding device (12) for the geotextile material, which rotates about the jacket (10) of the tubular body (15) and is designed as an unrolling device (16).

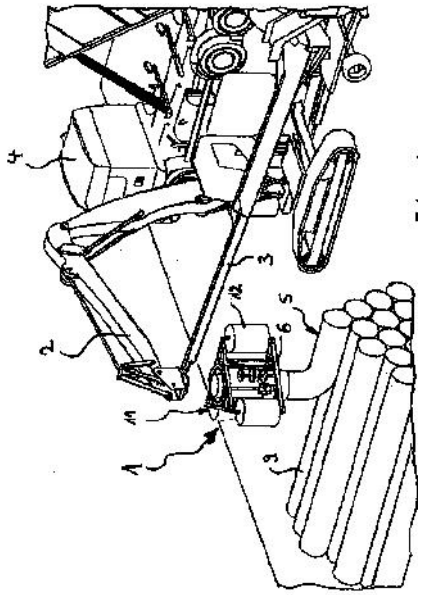

No. of Pages : 16 No. of Claims : 8

(12) PATENT APPLICATION PUBLICATION
(19) INDIA
(22) Date of filing of Application :10/01/2013
(21) Application No.93/KOLNP/2013 A
(43) Publication Date : 05/07/2013

(54) Title of the invention : CENTRIFUGAL LIQUID SEPARATION MACHINE TO EFFICIENTLY FLOW MULTI-PHASE SOLIDS FROM A HEAVY PHASE DISCHARGE STREAM

(51) International classification :F41H5/02
(31) Priority Document No :61/360,723
(32) Priority Date :01/07/2010
(33) Name of priority country :U.S.A.
(86) International Application No :PCT/US2011/042718
Filing Date :30/06/2011
(87) International Publication No :WO 2012/003407
(61) Patent of Addition to Application Number :NA
Filing Date :NA
(62) Divisional to Application Number :NA
Filing Date :NA

(71)**Name of Applicant :**
1)KOPPER, Michael
Address of Applicant :40609 Cornell Street, Beach Park, IL 60099 (US) U.S.A.
2)HAVRIN, Robert
(72)**Name of Inventor :**
1)KOPPER, Michael
2)HAVRIN, Robert

(57) Abstract :
The present invention relates to a centrifugal liquid separation machine and in particular to a screw type centrifugal liquid separation machine that lifts grit and other solids from the bowl wall in a radially inward manner and resuspends the grit and other solids into the heavy phase discharge flow. According to one embodiment of the present invention, the machine has an outer bowl and a conveyor. The bowl and conveyor are coaxial, and a back drive assembly causes these components to rotate at different speeds to allow the conveyor to mechanically sweep heavy phase materials within a separation region of the machine. Grit is conveyed radially inward along a plow and tumbled into the heavy phase discharge flow, wherein it is resuspended and exits the machine with that flow. Wipers can also be provided for preventing blockage of heavy phase flow under the solids baffle.

No. of Pages : 24 No. of Claims : 20

(12) PATENT APPLICATION PUBLICATION
(19) INDIA
(22) Date of filing of Application :06/03/2013
(21) Application No.621/KOLNP/2013 A
(43) Publication Date : 05/07/2013

(54) Title of the invention : DECANTER CENTRIFUGE PROVIDED WITH CONTINUOUS GREASING DEVICE

(51) International classification :B04B1/20,F16C33/66,F16N7/16
(31) Priority Document No :NA
(32) Priority Date :NA
(33) Name of priority country :NA
(86) International Application No :PCT/JP2010/063882
Filing Date :17/08/2010
(87) International Publication No:WO 2012/023181
(61) Patent of Addition to Application Number :NA
Filing Date :NA
(62) Divisional to Application Number :NA
Filing Date :NA

(71)**Name of Applicant :**
1)TOMOE ENGINEERING CO., LTD.
Address of Applicant :Art Village Osaki Central Tower, 2-2, Osaki 1-chome, Shinagawa-ku, Tokyo 1410032 Japan
(72)**Name of Inventor :**
1)YUMOTO Takeo
2)TAGAMI Toshio

(57) Abstract :
Provided is a decanter centrifuge provided with a continuous greasing device capable of suitably preventing leakage of lubricating oil along the supply pathways and of stably supplying and discharging lubricating oil. The centrifuge is provided with a continuous greasing device having a lubricating oil supply channel (17) formed inside a bowl hub (6),an annular introduction channel (25) that introduces the lubricating oil into the lubricating oil supply channel (17),a lubricating oil infusion channel (30) formed inside a holder (14),and an oil collector (34) installed on the outer surface (13a) of an outer shaft (13). The annular introduction channel (25) is configured of a first annular groove (15) formed inside the holder (14) and the outer surface (13a) of the outer shaft (13),which occludes the groove from the inside. The oil collector (34)is configured to revolve in a prescribed direction on an orbit inside the annular introduction channel (25) and when so doing,to move lubricating oil in the annular introduction channel (25) inward in the radial direction so as to flow into the lubricating oil supply channel (17).

No. of Pages : 27 No. of Claims : 12

(12) PATENT APPLICATION PUBLICATION
(19) INDIA
(22) Date of filing of Application :11/03/2013
(21) Application No.667/KOLNP/2013 A
(43) Publication Date : 05/07/2013

(54) Title of the invention : METHOD FOR CAPTURING CARBON DIOXIDE AND GAS TURBINE PLANT WITH CARBON DIOXIDE CAPTURE

(51) International classification :B01D53/14,B01D53/34,C10L3/10
(31) Priority Document No :10 2010 041 536.7
(32) Priority Date :28/09/2010
(33) Name of priority country :Germany
(86) International Application No :PCT/EP2011/066759
Filing Date :27/09/2011
(87) International Publication No :WO 2012/052262
(61) Patent of Addition to Application Number :NA
Filing Date :NA
(62) Divisional to Application Number :NA
Filing Date :NA

(71)**Name of Applicant :**
1)SIEMENS AKTIENGESELLSCHAFT
Address of Applicant :Wittelsbacherplatz 2, 80333 München, Germany
(72)**Name of Inventor :**
1)BIRLEY, Roland
2)BRUNHUBER, Christian
3)KREMER, Hermann
4)ZIMMERMANN, Gerhard

(57) Abstract :
Firstly, in a first absorption process (2), carbon dioxide is absorbed by contacting a supplied carbon dioxide-containing natural gas (6) with a first substream (7) of a solvent (9). In this process a carbon dioxide-depleted natural gas (10) and carbon dioxide-enriched solvent (11) are formed. Then in a combustion process (3), the carbon dioxide-depleted natural gas (10) is burnt, with a carbon dioxide-containing exhaust gas (12) being formed. Then, in a second absorption process (4), carbon dioxide is absorbed by contacting the carbon dioxide-containing exhaust gas (12) with a second substream (8) of the solvent (9). In this process an exhaust gas (13) freed from carbon dioxide and carbon dioxide-enriched solvent (11) are formed. Then, in a desorption process (5), the first substream (7) and the second substream (8) of the carbon dioxide-enriched solvent (11) are combined and carbon dioxide (14) is desorbed by supplying heating energy (15), with carbon dioxide-depleted solvent (9) being formed.

No. of Pages : 13 No. of Claims : 7

(12) PATENT APPLICATION PUBLICATION
(21) Application No.784/KOL/2012 A
(19) INDIA
(22) Date of filing of Application :16/07/2012
(43) Publication Date : 05/07/2013

(54) Title of the invention : POWER CONVERSION APPARATUS

(51) International classification	:C23C	(71)**Name of Applicant :**
(31) Priority Document No	:2011-288787	**1)KABUSHIKI KAISHA YASKAWA DENKI**
(32) Priority Date	:28/12/2011	Address of Applicant :2-1, KUROSAKI-SHIROISHI YAHATANISHI-KU KITAKYUSHU-SHI FUKUOKA 806-0004 Japan
(33) Name of priority country	:Japan	
(86) International Application No	:NA	(72)**Name of Inventor :**
Filing Date	:NA	**1)YAMANAKA YASUNORI**
(87) International Publication No	: NA	
(61) Patent of Addition to Application Number	:NA	
Filing Date	:NA	
(62) Divisional to Application Number	:NA	
Filing Date	:NA	

(57) Abstract :
A power conversion apparatus according to an embodiment includes a case that can be provided on a mounting wall surface and places therein an electric reactor and a power conversion board for performing power conversion between a predetermined power generator and a commercial electric power system. The case is sectioned into a central area and first and second side areas that sandwich the central area therebetween. The electric reactor is arranged in the central area.

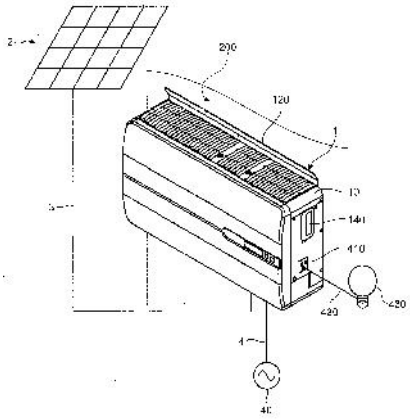

No. of Pages : 43 No. of Claims : 9

(12) PATENT APPLICATION PUBLICATION
(21) Application No.98/KOLNP/2013 A
(19) INDIA
(22) Date of filing of Application :11/01/2013
(43) Publication Date : 05/07/2013

(54) Title of the invention : METHOD FOR PRODUCING N-SUBSTITUTED-2-AMINO-4-(HYDROXYMETHYLPHOSPHINYL)-2-BUTENOIC ACID

(51) International classification :C07F9/30,C07B61/00
(31) Priority Document No :2010-136373
(32) Priority Date :15/06/2010
(33) Name of priority country :Japan
(86) International Application No :PCT/JP2011/063546
Filing Date :14/06/2011
(87) International Publication No :WO 2011/158813
(61) Patent of Addition to Application Number :NA
Filing Date :NA
(62) Divisional to Application Number :NA
Filing Date :NA

(71)**Name of Applicant :**
1)MEIJI SEIKA PHARMA CO., LTD.
Address of Applicant :4-16, Kyobashi 2-Chome, Chuo-ku, Tokyo 104-8002 Japan
(72)**Name of Inventor :**
1)ANDO, Takashi
2)MINOWA, Nobuto
3)MITOMI, Masaaki

(57) Abstract :
Disclosed is a method for efficiently producing a (Z)-N-substituted-2-amino-4-(hydroxymethylphosphinyl)-2-butenoic acid derivative. More specifically disclosed is a method for producing a (Z)-N-substituted-2-amino-4-(hydroxymethylphosphinyl)-2-butenoic acid derivative, comprising subjecting a compound represented by formula (1) (wherein R1 represents a hydrogen atom or a C1-4 alkyl group) and a compound represented by formula (2) (wherein R2 represents a C1-4 alkyl group, a C1-4 alkoxy group, an aryl group, an aryloxy group, or a benzyloxy group) to dehydration condensation in the presence or absence of an acid catalyst, wherein an organic solvent to be used in the reaction is a mixed solvent of acetic acid with a solvent selected from the group consisting of toluene, xylene, and chlorobenzene at a mixing ratio by volume of 1 : 3 to 5 (acetic acid : the other solvent), and the dehydration condensation is carried out by heating under reflux.

No. of Pages : 25 No. of Claims : 5

(12) PATENT APPLICATION PUBLICATION
(19) INDIA
(22) Date of filing of Application :08/03/2013

(21) Application No.661/KOLNP/2013 A
(43) Publication Date : 05/07/2013

(54) Title of the invention : DEVICE AND METHOD FOR FILTERING IN ELECTRICAL POWER NETWORKS

(51) International classification :H02J3/01,H02M1/12
(31) Priority Document No :NA
(32) Priority Date :NA
(33) Name of priority country :NA
(86) International Application No :PCT/FI2010/050662
Filing Date :24/08/2010
(87) International Publication No :WO 2012/025660
(61) Patent of Addition to Application Number :NA
Filing Date :NA
(62) Divisional to Application Number :NA
Filing Date :NA

(71)**Name of Applicant :**
1)MERUS POWER DYNAMICS OY
Address of Applicant :Pirkkalaistie 1, FI-37100 Nokia Finland
(72)**Name of Inventor :**
1)ÖÖRNI, Jyri
2)LEINONEN, Aki

(57) Abstract :
A device (600) for compensating a distorted current waveform of a three- phase network (900) comprises:- a control unit (400) configured to determine a compensating current (I10) based on a measured load current (I1l),- a capacitor unit (300) for storing energy and, a combination of a switch bridge (200) and inductors (L1, L2, L3) arranged to transfer energy from the three phase network (900) to the capacitor unit (300) and to return energy from the capacitor unit (300) to the three phase network (900) so as to generate the compensating current (I10), wherein the switch bridge (200) is arranged to alternately increase and decrease an inductor current (I1E) of a first inductor (L1) of said inductors (L1 L2, L3) by connecting the first inductor (L1) to a node (RAIL2) of the capacitor unit (300) at a switching frequency (fMOO) such that an averaged value of the inductor current (I1 E) is substantially equal to the compensating current (I1D), wherein the inductors (L1, L2, L3) comprise amorphous ferromagnetic material and wherein the switching frequency (fMoo) is in the range from 5 kHz to 50 kHz preferably in the range from 7 kHz to 18 kHz.

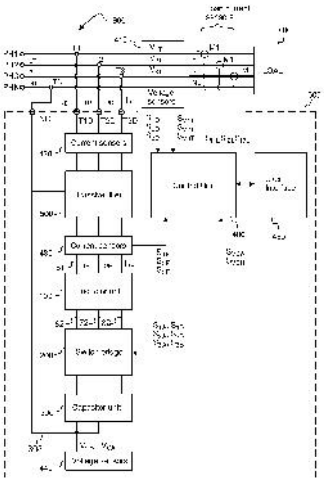

No. of Pages : 40 No. of Claims : 12

(12) PATENT APPLICATION PUBLICATION
(21) Application No.84/KOLNP/2013 A
(19) INDIA
(22) Date of filing of Application :10/01/2013
(43) Publication Date : 05/07/2013

(54) Title of the invention : SERPENTINE HEAT EXCHANGER FOR AN AIR CONDITIONER

(51) International classification :F28F1/32,F28F1/40,F28F13/02
(31) Priority Document No :2010-168118
(32) Priority Date :27/07/2010
(33) Name of priority country :Japan
(86) International Application No :PCT/JP2011/067087
Filing Date :27/07/2011
(87) International Publication No :WO 2012/014934
(61) Patent of Addition to Application Number :NA
Filing Date :NA
(62) Divisional to Application Number :NA
Filing Date :NA

(71)**Name of Applicant :**
1)SUMITOMO LIGHT METAL INDUSTRIES, LTD.
Address of Applicant :11-3, Shinbashi 5-chome, Minato-ku, Tokyo 105-0004 Japan
(72)**Name of Inventor :**
1)SASAKI, Naoe
2)ISOMURA, Norihisa
3)KATAHIRA, Shiro

(57) Abstract :
The disclosed serpentine heat exchanger for an air conditioner effectively minimizes losses in heat-exchange performance due to condensation and is capable of adequately accommodating efforts to reduce the size of air conditioners. Said serpentine heat exchanger (10) comprises a plurality of fin groups (14) and a heat-exchanger pipe (16). Each fin group (14) is formed by arranging a large number of fins (12), each comprising a metal plate with a prescribed coating layer formed on at least one surface, parallel to each other at intervals of 0.6-5.0 mm in a direction (y direction) perpendicular to the direction (x direction) in which a heat- exchange fluid, namely air, flows. The plurality of fin groups (14) are arranged in a row at a constant distance from each other in a direction (z direction) perpendicular to the x direction and the y direction. The heat-exchanger pipe (16) is laid out in a serpentine configuration so as to penetrate each fin group (14) in turn.

No. of Pages : 42 No. of Claims : 21

(12) PATENT APPLICATION PUBLICATION
(19) INDIA
(22) Date of filing of Application :10/01/2013
(21) Application No.91/KOLNP/2013 A
(43) Publication Date : 05/07/2013

(54) Title of the invention : DEGRADABLE SUPERABSORBENT POLYMERS

(51) International classification :C08F216/38,C08F8/14
(31) Priority Document No :61/361,448
(32) Priority Date :05/07/2010
(33) Name of priority country :U.S.A.
(86) International Application No :PCT/US2011/042945
Filing Date :05/07/2011
(87) International Publication No :WO 2012/006278
(61) Patent of Addition to Application Number :NA
Filing Date :NA
(62) Divisional to Application Number :NA
Filing Date :NA

(71)**Name of Applicant :**
1)RELUCEO, INC.
Address of Applicant :3700 Annapolis Lane North, Suite 105, Plymouth, MN 55447, U.S.A.
2)SCHOLTEN, Marc
3)ZHOU, Ning
(72)**Name of Inventor :**
1)SELIFONOV, Sergey
2)SCHOLTEN, Marc
3)ZHOU, Ning

(57) Abstract :
The present disclosure relates to degradable superabsorbent materials based on acetals of glyoxylic acid and derivatives thereof with polyvinyl alcohol, and methods of making the polymers. The polymers are used to make superabsorbent particles, coatings, sheets, and fibers. Formulations and articles including the superabsorbent polymers, particles, coatings, sheets, and fibers are also disclosed.

No. of Pages : 85 No. of Claims : 55

(12) PATENT APPLICATION PUBLICATION
(21) Application No.613/KOLNP/2013 A
(19) INDIA
(22) Date of filing of Application :06/03/2013
(43) Publication Date : 05/07/2013

(54) Title of the invention : IN-VEHICLE BATTERY

(51) International classification :H01M10/50,H05B3/20
(31) Priority Document No :2011-054090
(32) Priority Date :11/03/2011
(33) Name of priority country :Japan
(86) International Application No :PCT/JP2012/055744
Filing Date :07/03/2012
(87) International Publication No :WO 2012/124555
(61) Patent of Addition to Application Number :NA
Filing Date :NA
(62) Divisional to Application Number :NA
Filing Date :NA

(71)**Name of Applicant :**
1)NISSAN MOTOR CO., LTD.
Address of Applicant :2, Takara-cho, Kanagawa-ku Yokohama-shi, Kanagawa 221-0023, Japan
(72)**Name of Inventor :**
1)KINOSHITA Yukiko
2)TODOROKI Naoto

(57) Abstract :
In this vehicle battery ,a second battery module (13C) and a third battery module (13R) higher than the second battery module (13C) are arranged below the floor panel of a vehicle. The third battery module (13R) is disposed adjacent to the second battery module (13C) on the rear side thereof in the vehicle front/rear direction. The vehicle battery comprises slim heater modules (24) that heat the third battery module (13R) and are located at both end areas in the vehicle width direction excluding the center area, above the third battery module (13R) in the vehicle vertical direction.

No. of Pages : 26 No. of Claims : 6

(12) PATENT APPLICATION PUBLICATION
(21) Application No.663/KOLNP/2013 A
(19) INDIA
(22) Date of filing of Application :11/03/2013
(43) Publication Date : 05/07/2013

(54) Title of the invention : CARBURIZING STEEL HAVING EXCELLENT COLD FORGEABILITY AND METHOD OF MAMUFACTURING THE SAME

(51) International classification :C22C38/00,C21D8/00,C22C38/18
(31) Priority Document No :jp2010-267779
(32) Priority Date :30/11/2010
(33) Name of priority country :Japan
(86) International Application No :PCT/JP2011/006655
Filing Date :29/11/2011
(87) International Publication No :WO 2012/073485
(61) Patent of Addition to Application Number :NA
Filing Date :NA
(62) Divisional to Application Number :NA
Filing Date :NA

(71)**Name of Applicant :**
1)JFE STEEL CORPORATION
Address of Applicant :2-3, Uchisaiwai-cho 2-chome, Chiyoda-ku, Tokyo 100-0011 Japan
(72)**Name of Inventor :**
1)ICHIMIYA Katsuyuki
2)MITAO, Shinji

(57) Abstract :
The present invention provides a carburizing steel which has a composition that contains, in terms of mass percentages, 0.1 to 0.35% of C, 0.01 to 0.22% of Si, 0.3 to 1.5% of Mn, 1.35 to 3.0% of Cr, 0.018% or less of P, 0.02% or less of S, 0.015 to 0.05% of Al, 0.008 to 0.015% of N and 0.0015% or less of O within ranges that satisfy formulae (1), (2) and (3), with the remainder comprising Fe and unavoidable impurities, and in which the total structural fraction of ferrite and pearlite in the steel structure is 85% or higher and the average ferrite particle diameter is 25 μm or lower. 3.1≥ {([%Si]/2) + [%Mn] + [%Cr]} ≥ 2.2--- (1) [%C] ([%Si]/2) + ([%Mn]/5) + 2[%Cr] ≥ 3.0--- (2) 2.5 ≥ [%Al] / [%N] ≥ 1.7--- (3) Here, [%M] denotes the content (mass %) of an element M.

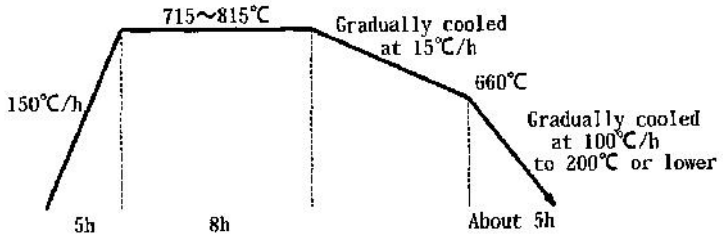

No. of Pages : 29 No. of Claims : 4

(12) PATENT APPLICATION PUBLICATION
(19) INDIA
(22) Date of filing of Application :11/03/2013
(21) Application No.664/KOLNP/2013 A
(43) Publication Date : 05/07/2013

(54) Title of the invention : METHOD AND APPARATUS FOR FILLING A MULTI-ROW PACKAGING TRAY WITH PIECE-FORM PRODUCTS

(51) International classification :B65B5/06,B65B23/14,B65B23/16
(31) Priority Document No :10 2010 041 346.1
(32) Priority Date :24/09/2010
(33) Name of priority country :Germany
(86) International Application No :PCT/EP2011/066447
Filing Date :21/09/2011
(87) International Publication No :WO 2012/038475
(61) Patent of Addition to Application Number :NA
Filing Date :NA
(62) Divisional to Application Number :NA
Filing Date :NA

(71)**Name of Applicant :**
1)LOESCH VERPACKUNGSTECHNIK GMBH
Address of Applicant :Industriestr. 1, 96146 Altendorf, Germany
(72)**Name of Inventor :**
1)HAMMACHER, Heinz-Peter

(57) Abstract :
The invention relates to a tray loading packaging machine that carries out a method for filling a multi-row packaging tray (Tray T) with fragmented products (P) at a high performance level, having the following steps: dividing (100) a single row flow (S1) of fragmented products (P) into a plurality of tracks (SM; SM1, SM2, SM3) disposed substantially parallel to each other for further transporting the products (P); synchronizing (200) the individual flows of the products (P) on the plurality of tracks (SM; SM1, SM2, SM3) to each other so that a product (P) can be transferred from each track (SM1, SM2, SM3) substantially simultaneously as a product (P) from each of the other tracks (SM1, SM2, SM3); and transferring the products (P) to the packaging tray (T), wherein a product is transferred from each track (SM1, SM2, SM3) to a row of the packaging tray (T).

No. of Pages : 37 No. of Claims : 20

(12) PATENT APPLICATION PUBLICATION
(19) INDIA
(22) Date of filing of Application :16/08/2010
(21) Application No.915/KOL/2010 A
(43) Publication Date : 05/07/2013

(54) Title of the invention : SMOKELESS TOBACCO PRODUCTS

(51) International classification :A24B13/00
(31) Priority Document No :NA
(32) Priority Date :NA
(33) Name of priority country :NA
(86) International Application No :NA
Filing Date :NA
(87) International Publication No : NA
(61) Patent of Addition to Application Number :NA
Filing Date :NA
(62) Divisional to Application Number :NA
Filing Date :NA

(71)**Name of Applicant :**
1)ITC LIMITED
Address of Applicant :37, J.L.NEHRU ROAD, KOLKATA-700 071 STATE OF WEST BENGAL, INDIA
(72)**Name of Inventor :**
1)TYAGI, KAMAL KUMAR
2)SHUKLA ADITYA
3)DHALEWADIKAR, S. V.

(57) Abstract :
The present invention relates to a composition for dissolvable smokeless tobacco product, comprising tobacco in amount of 10 wt% to 40 wt% and a binder adhesive in amount of 5 wt% to 50 wt%. The present invention further relates to a process for manufacturing a dissolvable smokeless tobacco product comprising the steps of grinding the tobacco followed by sieving and blending and compressing the blend into solid product forms of appropriate size and shape, preferably tablets etc.

No. of Pages : 15 No. of Claims : 14

(12) PATENT APPLICATION PUBLICATION
(19) INDIA
(22) Date of filing of Application :06/03/2013
(21) Application No.617/KOLNP/2013 A
(43) Publication Date : 05/07/2013

(54) Title of the invention : A METHOD FOR DETERMINING PRE CODING WEIGHTS

(51) International classification :H04B7/06,H04B7/04
(31) Priority Document No :NA
(32) Priority Date :NA
(33) Name of priority country :NA
(86) International Application No :PCT/EP2010/061905
Filing Date :16/08/2010
(87) International Publication No :WO 2012/022372
(61) Patent of Addition to Application Number :NA
Filing Date :NA
(62) Divisional to Application Number :NA
Filing Date :NA

(71)**Name of Applicant :**
1)Telefonaktiebolaget LM Ericsson (publ)
Address of Applicant :S-164 83 Stockholm, Sweden
(72)**Name of Inventor :**
1)NILSSON, Andreas
2)ATHLEY, Fredrik

(57) Abstract :
The present invention relates to a method for determining precoding weights between a base station and one user equipment in a communication network. The base station is provided with an antenna structure having multiple antennas,and the antenna structure provides coverage in a coverage area. The precoding weights are stored in a codebook available to the base station and the user equipment. The method comprises: selecting to use a part of the coverage area; determining,at the base station,a subset of precoding weights stored in the codebook generating at least one precoding beam within the selected part of the coverage area; and informing the one user equipment of the determined subset of precoding weights generating the at least one precoding beam within the selected part of the coverage area.

No. of Pages : 21 No. of Claims : 9

(12) PATENT APPLICATION PUBLICATION
(21) Application No.665/KOLNP/2013 A
(19) INDIA
(22) Date of filing of Application :11/03/2013
(43) Publication Date : 05/07/2013

(54) Title of the invention : ELECTRICALLY INSULATING NANOCOMPOSITE HAVING SEMICONDUCTING OR NONCONDUCTIVE NANOPARTICLES, USE OF THIS NANOCOMPOSITE AND PROCESS FOR PRODUCING IT

(51) International classification :C08K3/04,H01B1/18,H01B3/18
(31) Priority Document No :10 2010 041 630.4
(32) Priority Date :29/09/2010
(33) Name of priority country :Germany
(86) International Application No:PCT/EP2011/066013
Filing Date :15/09/2011
(87) International Publication No :WO 2012/041715
(61) Patent of Addition to Application Number :NA
Filing Date :NA
(62) Divisional to Application Number :NA
Filing Date :NA

(71)**Name of Applicant :**
1)SIEMENS AKTIENGESELLSCHAFT
Address of Applicant :Wittelsbacherplatz 2, 80333 München, Germany
(72)**Name of Inventor :**
1)LÜTHEN Volkmar
2)WINKLER Gabriele

(57) Abstract :
The invention relates to a cellulose material comprising cellulose fibers (12) having an impregnation. According to the invention, said impregnation is made of nanoparticles, in particular BNNT (11), comprising a shell of polymers (13), in particular PEDOT:PSS. The impregnation forms a type of network (14) that can reduce the specific resistance of the cellulose material due to the electrical conductivity of said network. The cellulose material can thereby be advantageously adapted to corresponding applications with respect to the electrical properties thereof. The cellulose material can thus also be used to electrically insulate transformers, wherein the cellulose material is thereby saturated with transformer oil and an adaptation of the specific resistance of the cellulose material to the specific resistance of the oil leads to improved dielectric strength of the transformer insulation. The invention further relates to a method for producing the cellulose material described above, comprising a suitable impregnation step for the cellulose material.

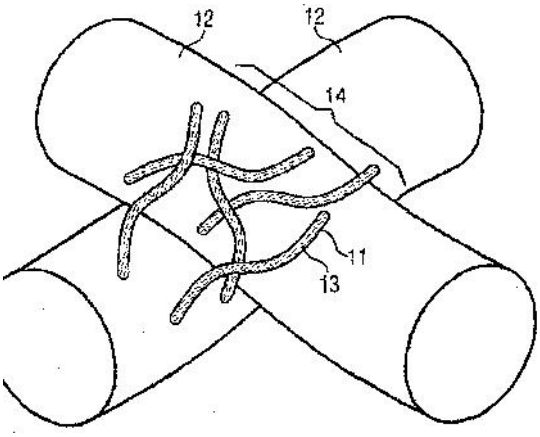

No. of Pages : 31 No. of Claims : 12

(12) PATENT APPLICATION PUBLICATION
(19) INDIA
(22) Date of filing of Application :11/03/2013
(21) Application No.666/KOLNP/2013 A
(43) Publication Date : 05/07/2013

(54) Title of the invention : ANTHRA[2,3-B:7,6-B']DITHIOPHENE DERIVATIVES AND THEIR USE AS ORGANIC SEMICONDUCTORS

(51) International classification :C07D333/52,C07F7/08
(31) Priority Document No :10008449.0
(32) Priority Date :13/08/2010
(33) Name of priority country :EPO
(86) International Application No :PCT/EP2011/003512
Filing Date :14/07/2011
(87) International Publication No :WO 2012/019683
(61) Patent of Addition to Application Number :NA
Filing Date :NA
(62) Divisional to Application Number :NA
Filing Date :NA

(71)**Name of Applicant :**
1)MERCK PATENT GMBH
Address of Applicant :Frankfurter Strasse 250, 64293 Darmstadt, Germany
(72)**Name of Inventor :**
1)WANG, Changsheng
2)TIERNEY, Steven
3)MITCHELL, William
4)BLOUIN, Nicolas
5)D'LAVARI, Mansoor

(57) Abstract :
The invention relates to novel anthra[2,3 b:7,6 b]dithiophene derivatives, methods of their preparation, their use as semiconductors in organic electronic (OE) devices, and to OE devices comprising these derivatives.

No. of Pages : 64 No. of Claims : 12

(12) PATENT APPLICATION PUBLICATION
(19) INDIA
(22) Date of filing of Application :10/01/2013
(21) Application No.92/KOLNP/2013 A
(43) Publication Date : 05/07/2013

(54) Title of the invention : CENTRIFUGAL LIQUID SEPARATION MACHINE USING PRESSURIZED AIR TO PROMOTE SOLIDS TRANSPORT

(51) International classification :B04B1/20,B04B11/02
(31) Priority Document No :61/355,023
(32) Priority Date :15/06/2010
(33) Name of priority country :U.S.A.
(86) International Application No :PCT/US2011/040405
Filing Date :14/06/2011
(87) International Publication No :WO 2011/159738
(61) Patent of Addition to Application Number :NA
Filing Date :NA
(62) Divisional to Application Number :NA
Filing Date :NA

(71)**Name of Applicant :**
1)KOPPER, Michael
Address of Applicant :40609 Cornell Street, Beach Park, IL 60099 (US) U.S.A.
2)HAVRIN, Robert
(72)**Name of Inventor :**
1)KOPPER, Michael
2)HAVRIN, Robert

(57) Abstract :
A screw type centrifugal liquid separation machine having a continuous decanter and using pressurized air to promote solids transport is provided. The machine has an outer bowl and a conveyor, which are coaxial. A back drive assembly is provided to maintain a difference in speed between the bowl and conveyor so that the conveyor has a mechanical sweeping action within a separation region of the machine. Air is introduced into the machine through the back drive assembly, and is injected into the heavy phase discharge path. In one location, the air acts as a turbulence inducer that at least partially re-suspends grits within the heavy phase material. The air is also injected through lift injectors radially spaced about the solids baffle to provide a uniform solid phase driving force. A flow control is also provided for controlling the discharge rate of the heavy phase material through a discharge port.

No. of Pages : 22 No. of Claims : 20

(12) PATENT APPLICATION PUBLICATION
(19) INDIA
(22) Date of filing of Application :09/01/2013
(21) Application No.73/KOLNP/2013 A
(43) Publication Date : 05/07/2013

(54) Title of the invention : OXYGEN-BARRIER FILM AND ADHESIVE

(51) International classification :B32B27/00,B32B27/36,C09J175/06
(31) Priority Document No :2010-140445
(32) Priority Date :21/06/2010
(33) Name of priority country :Japan
(86) International Application No :PCT/JP2011/063816
Filing Date :16/06/2011
(87) International Publication No :WO 2011/162160
(61) Patent of Addition to Application Number :NA
Filing Date :NA
(62) Divisional to Application Number :NA
Filing Date :NA

(71)**Name of Applicant :**
1)DIC Corporation
Address of Applicant :35-58, Sakashita 3-chome, Itabashi-ku, Tokyo 174-8520 Japan
(72)**Name of Inventor :**
1)TAKEDA Hiroyuki
2)OZONO Keiichi
3)NAKASHIMA Michiya
4)KANAGAWA Yoshinori

(57) Abstract :
Disclosed are an oxygen-barrier film and an adhesive used therefor. Provided are an adhesive that can be used for the packaging of food and that consists principally of polyester having excellent oxygen-barrier characteristics, and an oxygen-barrier film that is made by using said adhesive. The disclosed oxygen-barrier film is made by using an adhesive that contains: an amorphous polyester polyol produced by the polycondensation of a polyvalent carboxylic acid component including at least one type of an ortho-oriented aromatic dicarboxylic acid or an anhydride thereof, and a polyol including at least one type of compound selected from the group consisting of ethylene glycol, propylene glycol, butylene glycol, neopentyl glycol, and cyclohexane dimethanol; and a curing agent that can react with the amorphous polyester polyol.

No. of Pages : 66 No. of Claims : 16

(12) PATENT APPLICATION PUBLICATION
(19) INDIA
(22) Date of filing of Application :11/03/2013
(21) Application No.678/KOLNP/2013 A
(43) Publication Date : 05/07/2013

(54) Title of the invention : ELECTRIC WIRE, COIL, DEVICE FOR DESIGNING ELECTRIC WIRE, AND ELECTRIC MOTOR

(51) International classification :H01B7/30,H01B7/00,H01F5/00
(31) Priority Document No :2010-185635
(32) Priority Date :20/08/2010
(33) Name of priority country :Japan
(86) International Application No :PCT/JP2011/066563
Filing Date :21/07/2011
(87) International Publication No :WO 2012/023378
(61) Patent of Addition to Application Number :NA
Filing Date :NA
(62) Divisional to Application Number :NA
Filing Date :NA

(71)**Name of Applicant :**
1)FUJIKURA LTD.
Address of Applicant :5-1, Kiba 1-Chome, Koto-ku, Tokyo 1358512 Japan
(72)**Name of Inventor :**
1)SHINMOTO, Takashi
2)YOSHIDA, Shotaro
3)GUAN, Ning

(57) Abstract :
An electric wire which comprises a conductive body (11) comprising a material having a higher volume resistivity than that of copper, wherein the volume resistivity of the conductive body (11) is defined in such a manner that the ratio of the alternating-current resistance of the conductive body to that of a cupper wire that serves as a reference becomes less than 1 in a frequency band in which the electric wire is to be used.

No. of Pages : 114 No. of Claims : 16

(12) PATENT APPLICATION PUBLICATION
(21) Application No.924/KOL/2010 A
(19) INDIA
(22) Date of filing of Application :17/08/2010
(43) Publication Date : 05/07/2013

(54) Title of the invention : CONTROLLED RELEASE FORMULATIONS OF DRONEDARONE

(51) International classification :A61K31/343
(31) Priority Document No :NA
(32) Priority Date :NA
(33) Name of priority country :NA
(86) International Application No :NA
Filing Date :NA
(87) International Publication No : NA
(61) Patent of Addition to Application Number :NA
Filing Date :NA
(62) Divisional to Application Number :NA
Filing Date :NA

(71)**Name of Applicant :**
1)LUPIN LIMITED
Address of Applicant :159 CST ROAD, KALINA, SANTACRUZ (EAST), MUMBAI- 400 098, STATE OF MAHARASHTRA, INDIA AND ALSO HAVING A PLACE OF BUSINESS AT 1/1, SASHI SHEKHAR BOSE ROAD, KOLKATA - 700 025, STATE OF WEST BENGAL, INDIA
(72)**Name of Inventor :**
1)DESHMUKH, ASHISH, ASHOKRAO
2)BHUTADA, PRAVIN, MEGHRAJJI
3)CHANDRAN SAJEEV
4)KULKARNI SHIRISHKUMAR

(57) Abstract :
The present invention relates to controlled release formulation of dronedarone of pharmaceutically acceptable salts, esters, metabolites, prodrugs or enantiomers thereof and controlled release polymers. The use of controlled release formulations of Dronedarone would improve the bioavailability and the patient compliance with reduction in number of dosages to be taken per day.

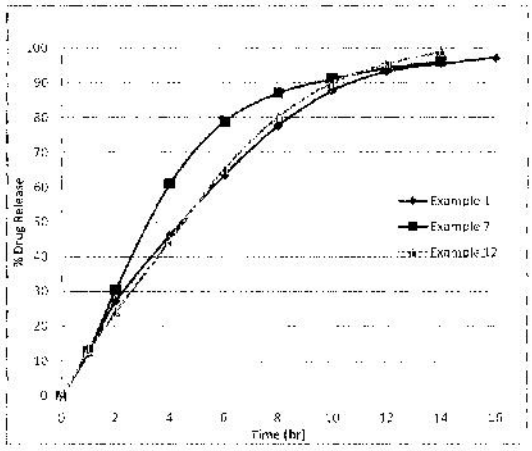

No. of Pages : 36 No. of Claims : 12

(12) PATENT APPLICATION PUBLICATION
(19) INDIA
(22) Date of filing of Application :11/03/2013
(21) Application No.675/KOLNP/2013 A
(43) Publication Date : 05/07/2013

(54) Title of the invention : SYNERGISTIC PARAFFINIC OIL AND BOSCALID FUNGICIDES

(51) International classification	:A01N61/02,A01N25/30,A01N43/40
(31) Priority Document No	:61/381,179
(32) Priority Date	:09/09/2010
(33) Name of priority country	:U.S.A.
(86) International Application No	:PCT/CA2011/001018
Filing Date	:09/09/2011
(87) International Publication No	:WO 2012/031355
(61) Patent of Addition to Application Number	:NA
Filing Date	:NA
(62) Divisional to Application Number	:NA
Filing Date	:NA

(71)**Name of Applicant :**
1)SUNCOR ENERGY INC.
Address of Applicant :Suncor Energy Centre, West Tower, 22nd Floor, P.O. Box 2844, 150 - 6 Avenue S.W., Calgary, Alberta T2P 3E3 Canada
(72)**Name of Inventor :**
1)FEFER, Michael
2)LIU, Jun

(57) Abstract :
Fungicidal compositions comprising a paraffinic oil and 2-chloro-N-(4- chloro[1,1-biphenyl]-2-yl)-3 pyridinecarboxamide (boscalid) are provided. The fungicidal compositions may further comprise a pigment. The fungicidal compositions may be provided as oil-in-water (O/W) emulsions which may be used for controlling fungal disease, such as dollar spot or bentgrass dead spot or bermudagrass dead spot, in plants, such as turfgrasses. Methods of applying the fungicidal compositions are also provided.

No. of Pages : 94 No. of Claims : 50

(12) PATENT APPLICATION PUBLICATION
(19) INDIA
(22) Date of filing of Application :11/03/2013
(21) Application No.676/KOLNP/2013 A
(43) Publication Date : 05/07/2013

(54) Title of the invention : INSTALL METHOD, APPARATUS

(51) International classification :G06F9/445
(31) Priority Document No :2010-208213
(32) Priority Date :16/09/2010
(33) Name of priority country :Japan
(86) International Application No :PCT/JP2011/070910
Filing Date :07/09/2011
(87) International Publication No :WO 2012/036174
(61) Patent of Addition to Application Number :NA
Filing Date :NA
(62) Divisional to Application Number :NA
Filing Date :NA

(71)**Name of Applicant :**
1)RICOH COMPANY, LTD.
Address of Applicant :3-6, Nakamagome 1-chome, Ohta-ku, Tokyo, 1438555 Japan
(72)**Name of Inventor :**
1)HIROKAWA, Tomoya
2)SUGIURA, Yuuko
3)HAN, Xiaofeng
4)IKAWA, Taku

(57) Abstract :
An install method executed by an apparatus, including receiving a call from a first program when the first program is activated; and installing a second program that is used by the first program, in response to the call.

No. of Pages : 59 No. of Claims : 12

(12) PATENT APPLICATION PUBLICATION
(19) INDIA
(22) Date of filing of Application :11/03/2013
(21) Application No.677/KOLNP/2013 A
(43) Publication Date : 05/07/2013

(54) Title of the invention : WRITING INSTRUMENT

(51) International classification :B43K29/08,B43K24/08,B43K7/12
(31) Priority Document No :20 2010 011 339.3
(32) Priority Date :12/08/2010
(33) Name of priority country :Germany
(86) International Application No :PCT/EP2011/003360
Filing Date :06/07/2011
(87) International Publication No :WO 2012/019679
(61) Patent of Addition to Application Number :NA
Filing Date :NA
(62) Divisional to Application Number :NA
Filing Date :NA

(71)**Name of Applicant :**
1)KLIO-ETERNA SCHREIBGERÄTE GMBH & CO KG
Address of Applicant :Glash¼ttenweg 7, 77709 Wolfach Germany
(72)**Name of Inventor :**
1)BRIGGL, Hariolf

(57) Abstract :
The invention relates to a writing instrument (1) having a writing instrument housing (3), with a writing nib (8) protruding beyond one end of said writing instrument housing, wherein the writing instrument (1) has a machine-readable data memory. The invention proposes providing a functional element (5) at that end of the writing instrument housing (3) which is remote from the writing nib (8) and attaching at least one subregion of the functional element (5) to the writing instrument (1) in a detachable manner, and allowing the functional element (5) or its detachably attached subregion to contain the machine-readable data memory.

No. of Pages : 18 No. of Claims : 6

(12) PATENT APPLICATION PUBLICATION
(19) INDIA
(22) Date of filing of Application :05/03/2013
(21) Application No.592/KOLNP/2013 A
(43) Publication Date : 05/07/2013

(54) Title of the invention : METHOD FOR PRODUCING A PISTON RING WITH EMBEDDED PARTICLES

(51) International classification :B22D13/10,B22D19/02,B22D19/14
(31) Priority Document No :10 2010 042 402.1
(32) Priority Date :13/10/2010
(33) Name of priority country :Germany
(86) International Application No :PCT/EP2011/062351
Filing Date :19/07/2011
(87) International Publication No :WO 2012/048919
(61) Patent of Addition to Application Number :NA
Filing Date :NA
(62) Divisional to Application Number :NA
Filing Date :NA

(71)**Name of Applicant :**
1)FEDERAL-MOGUL BURSCHEID GMBH
Address of Applicant :Bürgermeister-Schmidt-Strasse 17, 51399 Bruscheid, Germany
(72)**Name of Inventor :**
1)MITTLER, Richard
2)PELSOECZY, Laszlo

(57) Abstract :
The invention relates to a piston ring comprising wear resistant particles on the flank thereof which is produced by producing a melt of the starting materials of a metal product adding ceramic particles to the melt pouring the melt into a prefabricated mould and cooling the melt. During cooling the mould is aligned so that the ceramic particles collect on at least one of the piston ring flanks.

No. of Pages : 11 No. of Claims : 6

(12) PATENT APPLICATION PUBLICATION
(19) INDIA
(22) Date of filing of Application :05/03/2013
(21) Application No.593/KOLNP/2013 A
(43) Publication Date : 05/07/2013

(54) Title of the invention : COMBINATION UNIT AND COMBINATION METHOD OF MULTIPLE MEMBRANE SHELLS

(51) International classification :C02F1/44
(31) Priority Document No :00
(32) Priority Date :05/01/2011
(33) Name of priority country :
(86) International Application No :PCT/CN2010/078122
Filing Date :26/10/2010
(87) International Publication No :WO 2012/055092
(61) Patent of Addition to Application Number :NA
Filing Date :NA
(62) Divisional to Application Number :NA
Filing Date :NA

(71)**Name of Applicant :**
1)HARBIN ROPV INDUSTRY DEVELOPMENT CENTER
Address of Applicant :Room 2501, Pufa Plaza, No.209, Changjiang Road, Nangang District, Harbin, Heilongjiang 150090 China
(72)**Name of Inventor :**
1)LI, Youqing
2)AN, Jingbo
3)WANG, Qiyuan
4)LI, Yucheng

(57) Abstract :
A combination unit of multiple membrane shells is formed by multiple membrane shells (1) integrated in parallel. The raw water port (12) and the concentrated water port (13) of each membrane shell (1) are respectively communicated and sealed with the raw water port (12) and the concentrated water port (13) of one adjacent membrane shell (1). The combination unit of multiple membrane shells forms a common raw water port (2) and a common concentrated water port (3). The common raw water port (2) and the common concentrated water port (3) are respectively communicated with a raw water tube and a concentrated water tube. A combination method of multiple membrane shells is also disclosed. The combination unit of multiple membrane shells can be placed horizontally or vertically. The combination unit reduces utilization of clamps sealing points engineering cost leakage hidden trouble engineering installation and device accommodation area and is convenient to maintain.

No. of Pages : 29 No. of Claims : 20

(12) PATENT APPLICATION PUBLICATION
(21) Application No.587/KOLNP/2013 A
(19) INDIA
(22) Date of filing of Application :04/03/2013
(43) Publication Date : 05/07/2013

(54) Title of the invention : DEVICE AND METHOD FOR PRODUCING SACKS FROM TUBE PIECES

(51) International classification :B31B29/00,B31B29/26
(31) Priority Document No :102010041875.7
(32) Priority Date :01/10/2010
(33) Name of priority country :Germany
(86) International Application No :PCT/EP2011/066328
Filing Date :20/09/2011
(87) International Publication No :WO 2012/041738
(61) Patent of Addition to Application Number :NA
Filing Date :NA
(62) Divisional to Application Number :NA
Filing Date :NA

(71)**Name of Applicant :**
1)WINDMÖLLER & HÖLSCHER KG
Address of Applicant :MünsterstraBe 50, 49525 Lengerich/Westfalen, Germany
(72)**Name of Inventor :**
1)HÄGER, Christian
2)TAUSCH, Carsten
3)ULLMANN, Klaus

(57) Abstract :
The invention relates to a device (1) for producing sacks from tube pieces, comprising: a transport device (45) by means of which the tube pieces can be transported in a transport direction (x) transverse to the direction of extent (z) of the tube pieces, to processing stations (8, 9, 10, 11); a base opening station (8) by means of which open end segments can be generated by folding over regions of at least one wall of the tube piece about folded base edges at at least one end of the tube piece; a closing station by means of which the open base rectangles can be closed to form bases by folding over parts of the walls and/or tabs about further folded edges of the open base rectangles; an embossing device (26, 26) by means of which at least one part of the base folding edge and/or the further folded edges can be embossed into the tube pieces and which comprises an embossing element (28) and an associated counter element (29); and a folding device by means of which areas of both walls can be folded over about the folded base edges by greater than 90 degrees, in order to be able to bring the embossing element (28) and the associated counter element (29) into contact with the same wall of the tube piece.

No. of Pages : 19 No. of Claims : 11

(12) PATENT APPLICATION PUBLICATION
(19) INDIA
(22) Date of filing of Application :10/01/2013
(21) Application No.86/KOLNP/2013 A
(43) Publication Date : 05/07/2013

(54) Title of the invention : MODES OF COOLING HYBRID ELECTRIC MACHINES

(51) International classification :H02K9/19,H02K1/20,B60K11/02
(31) Priority Document No :61/360,683
(32) Priority Date :01/07/2010
(33) Name of priority country :U.S.A.
(86) International Application No :PCT/US2011/042332
Filing Date :29/06/2011
(87) International Publication No :WO 2012/003208
(61) Patent of Addition to Application Number :NA
Filing Date :NA
(62) Divisional to Application Number :NA
Filing Date :NA

(71)**Name of Applicant :**
1)ALLISON TRANSMISSION, INC.
Address of Applicant :4700 West 10th Street, Indianapolis, IN 46222 U.S.A.
(72)**Name of Inventor :**
1)ERFANFAR, Mohsen
2)BASS, Edward

(57) Abstract :
A system and method for cooling an electric motor comprising a plurality of laminations defining a lamination stack, a coolant passage and a motor winding. Coolant is pumped into the coolant passage and forced along the entire lenght of the lamination stack. The coolant is then sprayed on the motor winding in order to cool the motor winding.

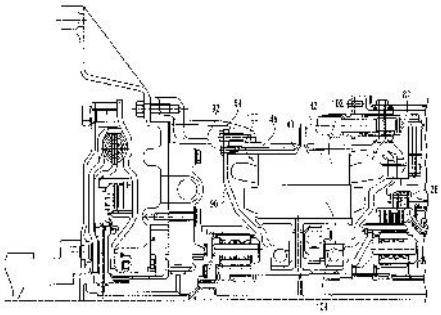

No. of Pages : 27 No. of Claims : 20

(12) PATENT APPLICATION PUBLICATION
(19) INDIA
(22) Date of filing of Application :11/01/2013
(21) Application No.94/KOLNP/2013 A
(43) Publication Date : 05/07/2013

(54) Title of the invention : HETEROPHASIC PROPYLENE COPOLYMER WITH EXCELLENT IMPACT/STIFFNESS BALANCE

(51) International classification :C08L23/10,C08F297/08,C08L23/12
(31) Priority Document No :10172178.5
(32) Priority Date :06/08/2010
(33) Name of priority country :EPO
(86) International Application No :PCT/EP2011/063250
Filing Date :01/08/2011
(87) International Publication No :WO 2012/016965
(61) Patent of Addition to Application Number :NA
Filing Date :NA
(62) Divisional to Application Number :NA
Filing Date :NA

(71)**Name of Applicant :**
1)BOREALIS AG
Address of Applicant :IZD Tower, WagramerstraBe 17-19, A-1220 Vienna, Austria
(72)**Name of Inventor :**
1)KOCK, Cornelia
2)DOSHEV, Petar
3)POTTER, Elisabeth
4)GESELLMANN, Guenter
5)LESKINEN, Pauli

(57) Abstract :
Heterophasic propylene copolymer comprising -a matrix (M) being a polypropylene, said polypropylene comprises at least three polypropylene fractions, the three polypropylene fractions differ from each other by the melt flow rate MFR2 (230°C) and at least one of the three polypropylene fractions has a melt flow rate MFR2 (230°C) in the range of 1.0 to 15.0 g/lOmin, and -an elastomeric propylene copolymer dispersed in said matrix, wherein -the heterophasic propylene copolymer has a melt flow rate MFR2 (230°C) of equal or more than 20.0 g/lOmin, and -the amorphous phase of the xylene cold soluble fraction of the heterophasic propylene copolymer has an intrinsic viscosity of equal or higher than 2.0 dl/g.

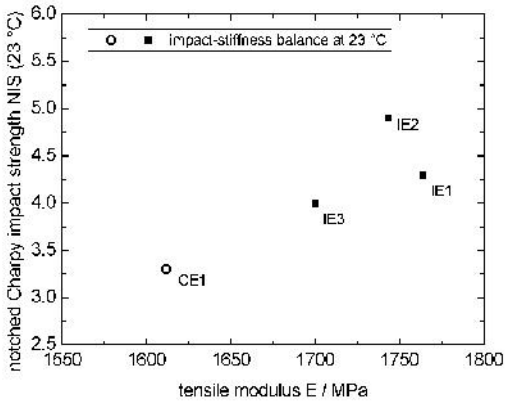

No. of Pages : 46 No. of Claims : 16

(12) PATENT APPLICATION PUBLICATION
(19) INDIA
(22) Date of filing of Application :21/02/2013
(21) Application No.447/KOLNP/2013 A
(43) Publication Date : 05/07/2013

(54) Title of the invention : DISPLAY DEVICE

(51) International classification :G09F15/00,G09F11/02
(31) Priority Document No :20 2010 010 562.5
(32) Priority Date :23/07/2010
(33) Name of priority country :Germany
(86) International Application No :PCT/EP2011/003717
Filing Date :25/07/2011
(87) International Publication No :WO 2012/010328
(61) Patent of Addition to Application Number :NA
Filing Date :NA
(62) Divisional to Application Number :NA
Filing Date :NA

(71)**Name of Applicant :**
1)GTG GMBH
Address of Applicant :MÜNCHNER STR. 2C, 82152 PLANEGG Germany
(72)**Name of Inventor :**
1)AUTENZELLER, PETER

(57) Abstract :
The invention relates to a display device in a tower-like design, comprising display panels (11 - 19) which are arranged one over the other in levels (20,21), which are pivotably connected in a wing-like manner in each level, and which can be rotated independently of one another from level to level about a common vertical axis (29). The display device also comprises actuating means for unfolding and folding the display panels (11 - 19) from level to level between a position in which the display panels (11 - 19) of a level come to rest on a common vertical plane in an unfolded manner and a position in which the display panels form the lateral surfaces of a prism in a folded manner, and for rotating the display panels (11 - 19) from level to level.

No. of Pages : 25 No. of Claims : 31

(12) PATENT APPLICATION PUBLICATION
(19) INDIA
(22) Date of filing of Application :04/03/2013
(21) Application No.586/KOLNP/2013 A
(43) Publication Date : 05/07/2013

(54) Title of the invention : TAMPER RESISTANT DOSAGE FORM COMPRISING AN ANIONIC POLYMER

(51) International classification :A61K9/20,A61K9/48
(31) Priority Document No :10009124.8
(32) Priority Date :02/09/2010
(33) Name of priority country :EPO
(86) International Application No :PCT/EP2011/004404
Filing Date :01/09/2011
(87) International Publication No :WO 2012/028317
(61) Patent of Addition to Application Number :NA
Filing Date :NA
(62) Divisional to Application Number :NA
Filing Date :NA

(71)**Name of Applicant :**
1)GRÜNENTHAL GMBH
Address of Applicant :ZieglerstraBe 6, 52078 Aachen, Germany
(72)**Name of Inventor :**
1)BARNSCHEID, Lutz
2)SCHWIER, Sebastian
3)BARTHOLOMÄUS, Johannes

(57) Abstract :
The invention relates to a pharmaceutical dosage form exhibiting a breaking strength of at least 500 N, said dosage form containing - a pharmacologically active ingredient (A); - an anionic polysaccharide (B) obtainable by introducing anionic functional groups, in protonated form or a physiologically acceptable salt thereof, into a polysaccharide; and - a polyalkylene oxide (C); wherein the pharmacologically active ingredient (A) is present in a controlled-release matrix comprising the anionic polysaccharide (B) and the polyalkylene oxide (C).

No. of Pages : 62 No. of Claims : 11

(12) PATENT APPLICATION PUBLICATION
(21) Application No.87/KOLNP/2013 A
(19) INDIA
(22) Date of filing of Application :10/01/2013
(43) Publication Date : 05/07/2013

(54) Title of the invention : CORROSION INHIBITING COATING BASED ON CERIUM OXIDE AND A CATECHOLIC POLYMER

(51) International classification :C09D5/08
(31) Priority Document No :1050806-7
(32) Priority Date :16/07/2010
(33) Name of priority country :Sweden
(86) International Application No :PCT/EP2011/056940
Filing Date :02/05/2011
(87) International Publication No :WO 2012/007199
(61) Patent of Addition to Application Number :NA
Filing Date :NA
(62) Divisional to Application Number :NA
Filing Date :NA

(71)**Name of Applicant :**
1)BIOPOLYMER TECHNOLOGY OF SWEDEN AB
Address of Applicant :Företagsvägen 2, S-435 33 Mölnlycke Sweden
(72)**Name of Inventor :**
1)SABABI, Majid
2)ZHANG, Fan
3)PAN, Jinshan
4)CLAESSON, Per
5)DEDINAITÉ, Andra
6)KRIVOSHEEVA Olga

(57) Abstract :
A corrosion inhibiting coating for metal objects as well as a method for applying a coating is described. Said coating comprising at least one cerium oxide and at least one polymer. The polymer comprises at least one cathecholic component covalently bound thereto, and the at least one polymer displays a net positive charge at a pH of 7. The material inventive coating is environmental friendly and does not display serious health risks. Further an excellent corrosion inhibition is obtained for metals, even for carbon steel. The corrosion the properties of a coated surface is comparable with those of stainless steel.

No. of Pages : 44 No. of Claims : 35

(12) PATENT APPLICATION PUBLICATION
(19) INDIA
(22) Date of filing of Application :05/03/2013

(21) Application No.599/KOLNP/2013 A
(43) Publication Date : 05/07/2013

(54) Title of the invention : RECOMBINANT MYCOBACTERIUM AS VACCINE FOR USE IN HUMANS

(51) International classification :A61K39/04
(31) Priority Document No :61/384,375
(32) Priority Date :20/09/2010
(33) Name of priority country :U.S.A.
(86) International Application No :PCT/EP2011/066131
Filing Date :16/09/2011
(87) International Publication No :WO 2012/038348
(61) Patent of Addition to Application Number :NA
Filing Date :NA
(62) Divisional to Application Number :NA
Filing Date :NA

(71)**Name of Applicant :**
1)VAKZINE PROJEKT MANAGEMENT GMBH
Address of Applicant :Mellendorfer StraBe 9, 30625 Hannover, Germany
(72)**Name of Inventor :**
1)GRODE, Leander

(57) Abstract :
The invention relates to a recombinant vaccine providing protective immunity especially against tuberculosis in human subjects.

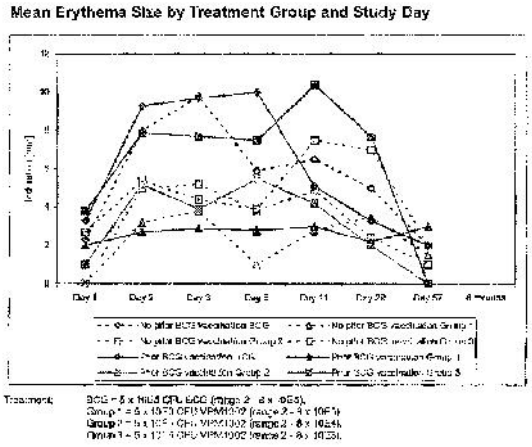

No. of Pages : 35 No. of Claims : 15

(12) PATENT APPLICATION PUBLICATION
(19) INDIA
(22) Date of filing of Application :01/01/2013
(21) Application No.6/KOLNP/2013 A
(43) Publication Date : 05/07/2013

(54) Title of the invention : PHARMACEUTICAL COMPOSITIONS FOR SUBLINGUAL DELIVERY OF OPIOIDS

(51) International classification :A61K31/137,A61K9/00,A61K9/12
(31) Priority Document No :1011028.6
(32) Priority Date :30/06/2010
(33) Name of priority country :U.K.
(86) International Application No :PCT/GB2011/051230
Filing Date :29/06/2011
(87) International Publication No :WO 2012/001411
(61) Patent of Addition to Application Number :NA
Filing Date :NA
(62) Divisional to Application Number :NA
Filing Date :NA

(71)**Name of Applicant :**
1)LONDONPHARMA LTD
Address of Applicant :Norwich Bioincubator, Norwich Research Park, Colney Lane, Norwich NR4 7UH U.K.
2)ROSS Elizabeth Anita
(72)**Name of Inventor :**
1)SAMS, Martin James
2)HIGH, Juliet Victoria
3)JAMIESON, Paul Andrew
4)ROSS, Calvin John (deceased)

(57) Abstract :
The invention provides pharmaceutical compositions for the sublingual delivery of opioids. The invention also provides delivery devices adapted for sublingual delivery of such compositions.

No. of Pages : 64 No. of Claims : 18

(12) PATENT APPLICATION PUBLICATION
(19) INDIA
(22) Date of filing of Application :10/01/2013
(21) Application No.81/KOLNP/2013 A
(43) Publication Date : 05/07/2013

(54) Title of the invention : BIFUNCTIONAL RHO KINASE INHIBITOR COMPOUNDS, COMPOSITION AND USE

(51) International classification :A61K51/00,A61M36/14
(31) Priority Document No :61/365,681
(32) Priority Date :19/07/2010
(33) Name of priority country :U.S.A.
(86) International Application No :PCT/US2011/044148
Filing Date :15/07/2011
(87) International Publication No :WO 2012/012282
(61) Patent of Addition to Application Number :NA
Filing Date :NA
(62) Divisional to Application Number :NA
Filing Date :NA

(71)**Name of Applicant :**
1)INSPIRE PHARMACEUTICALS, INC.
Address of Applicant :1 Merck Drive, P.O. Box 100, Whitehouse Station, New Jersey 08889-0100, U.S.A.
(72)**Name of Inventor :**
1)LAMPE, John W.
2)WATSON, Paul S.
3)VITTITOW, Jason L.
4)PETERSON, Ward M.

(57) Abstract :
This invention relates to synthetic bifunctional compounds comprising a first rho-associated kinase (ROCK) inhibiting compound and a second pharmaceutically active compound with complementary activity; the first and the second compounds are covalently linked by a biologically labile bond. This invention also relates to methods of making such compounds. The invention also relates to methods of using such bifunctional compounds in the prevention or treatment of diseases or conditions that are affected or can be assisted by altering the integrity or rearrangement of the cytoskeleton. Particularly, this invention relates to methods of treating ophthalmic diseases such as disorders in which intraocular pressure is elevated, for example primary open angle glaucoma, using the bifunctional compounds.

No. of Pages : 57 No. of Claims : 14

(12) PATENT APPLICATION PUBLICATION
(19) INDIA
(22) Date of filing of Application :08/03/2013
(21) Application No.660/KOLNP/2013 A
(43) Publication Date : 05/07/2013

(54) Title of the invention : MAGNESIUM BATTERY

(51) International classification	:H01M12/06,H01M6/04,H01M12/08
(31) Priority Document No	:2010-179770
(32) Priority Date	:10/08/2010
(33) Name of priority country	:Japan
(86) International Application No	:PCT/JP2011/068258
Filing Date	:10/08/2011
(87) International Publication No	:WO 2012/020791
(61) Patent of Addition to Application Number	:NA
Filing Date	:NA
(62) Divisional to Application Number	:NA
Filing Date	:NA

(71)**Name of Applicant :**
1)AQUMO Co., Ltd.
Address of Applicant :1-5-10, Azabujuban, Minato-ku, Tokyo 1060045 Japan
(72)**Name of Inventor :**
1)SUZUKI, Yukiyoshi

(57) Abstract :
Provided is a magnesium battery in which the negative electrode capacity thereof can be increased sustainably.The magnesium battery (100) comprises a negative electrode (110) which is composed of magnesium and a liquid retaining section (120) in which an aqueous electrolytic solution that can cause the elution of magnesium ions from the negative electrode (110) can be retained, wherein the liquid retaining section (120) can retain an aqueous solution of a citric acid salt as an aqueous electrolytic solution and can generate an electromotive force sustainably between the negative electrode (110) and a positive electrode. Thus, citric acid salt ions and magnesium ions eluted from the negative electrode (110) form a complex, thereby increasing the solubility of the magnesium ions. As a result, the precipitation of magnesium oxide in the negative electrode (110) can be prevented and magnesium can be electrolyzed sustainably, whereby the negative electrode capacity in the magnesium battery (100) can be increased sustainably.

No. of Pages : 22 No. of Claims : 7

(12) PATENT APPLICATION PUBLICATION
(19) INDIA
(22) Date of filing of Application :11/01/2013
(21) Application No.95/KOLNP/2013 A
(43) Publication Date : 05/07/2013

(54) Title of the invention : LIGHT PANEL AND METHOD FOR PRODUCING THE LIGHT PANEL

(51) International classification :G09F13/04
(31) Priority Document No :1050834-9
(32) Priority Date :28/07/2010
(33) Name of priority country :Sweden
(86) International Application No :PCT/SE2011/050883
Filing Date :30/06/2011
(87) International Publication No :WO 2012/015352
(61) Patent of Addition to Application Number :NA
Filing Date :NA
(62) Divisional to Application Number :NA
Filing Date :NA

(71)**Name of Applicant :**
1)Anders RENSMO
Address of Applicant :Moränvägen 8, S-702 30 Örebro, Sweden
(72)**Name of Inventor :**
1)Anders RENSMO

(57) Abstract :
A light panel comprising a light panel front (2) made of a translucent, self- supporting structure having a forward panel (10) distanced from a rear panel (12) by means of cross-linking walls (11) and arranged in the light panel to transmit light from one or more light sources (3) arranged behind the light panel front. A light scattering medium is arranged between the light source (3) and the forward panel (10) of the light panel front.

No. of Pages : 19 No. of Claims : 16

(12) PATENT APPLICATION PUBLICATION
(19) INDIA
(22) Date of filing of Application :21/02/2013
(21) Application No.435/KOLNP/2013 A
(43) Publication Date : 05/07/2013

(54) Title of the invention : SINTERED GEARWHEEL

(51) International classification :B22F3/11,B22F5/08,B21H5/02
(31) Priority Document No :A 1454/2010
(32) Priority Date :31/08/2010
(33) Name of priority country :Austria
(86) International Application No :PCT/AT2011/000289
Filing Date :01/07/2011
(87) International Publication No :WO 2012/027761
(61) Patent of Addition to Application Number :NA
Filing Date :NA
(62) Divisional to Application Number :NA
Filing Date :NA

(71)**Name of Applicant :**
1)MIBA SINTER AUSTRIA GMBH
Address of Applicant :DR. MITTERBAUER STR. 3, A-4663 LAAKIRCHEN, Austria
(72)**Name of Inventor :**
1)MÜLLER , ALEXANDER
2)RÖBLER, HORST
3)SANDNER, CHRISTIAN

(57) Abstract :
What is described is a sintered gearwheel having teeth (1) which ,in the flank and foot regions (2,3), have a compacted surface layer (7,8,9) which is continuous in the transition portion (4) between the flank and foot regions (2,3) and has a residual porosity of less than 10%. In order to increase the load-bearing capacity, it is proposed that the compacted surface layer (9) be formed with a smaller thickness in the transition portion (4) between the flank and foot regions (2,3) than in the adjoining flank and foot regions (2,3).

No. of Pages : 8 No. of Claims : 2

(12) PATENT APPLICATION PUBLICATION
(19) INDIA
(22) Date of filing of Application :16/03/2009
(21) Application No.458/KOL/2009 A
(43) Publication Date : 05/07/2013

(54) Title of the invention : SILK YARN REELING MACHINE (ANNA MACHINE)

(51) International classification :D01B7/04
(31) Priority Document No :NA
(32) Priority Date :NA
(33) Name of priority country :NA
(86) International Application No :NA
Filing Date :NA
(87) International Publication No : NA
(61) Patent of Addition to Application Number :NA
Filing Date :NA
(62) Divisional to Application Number :NA
Filing Date :NA

(71)**Name of Applicant :**
1)MASUTA PRODUCERS COMPANY LIMITED
Address of Applicant :CHETNA APPARTMENTS, FLAT NO-2, CIRCULAR ROAD, BARMASIA, DEOGHAR-814112,Jharkhand India
(72)**Name of Inventor :**
1)ANNEMARIE MINK MSC.

(57) Abstract :
The present invention relates to a reeling machine and more particularly a simple, low cost and efficient Tasar silk yam reeling machine adapted to produce un-twisted reeled silk yam of consistent superior quality wherein inserting twist can be need based, driven only by electric motor at high speed with reduced power consumption.

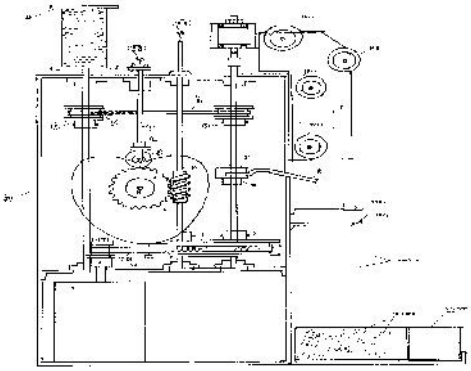

No. of Pages : 24 No. of Claims : 11

(12) PATENT APPLICATION PUBLICATION
(19) INDIA
(22) Date of filing of Application :01/03/2013
(21) Application No.557/KOLNP/2013 A
(43) Publication Date : 05/07/2013

(54) Title of the invention : HYBRID SYSTEM

(51) International classification :B60K6/20,B60W10/24,B60K6/50
(31) Priority Document No :61/381,615
(32) Priority Date :10/09/2010
(33) Name of priority country :U.S.A.
(86) International Application No :PCT/US2011/051018
Filing Date :09/09/2011
(87) International Publication No :WO 2012/034031
(61) Patent of Addition to Application Number :NA
Filing Date :NA
(62) Divisional to Application Number :NA
Filing Date :NA

(71)**Name of Applicant :**
1)ALLISON TRANSMISSION, INC.
Address of Applicant :4700 West 10th Street, Indianapolis, IN 46222 U.S.A.
(72)**Name of Inventor :**
1)HARTZ, James, F.
2)PATEL, Nayan, V.
3)THOMPSON, Vernon, D.
4)RICHARDSON, Paul, A.
5)BAKER, Christopher, A.
6)PELTON, George, S.

(57) Abstract :
A hybrid system includes a hybrid module that is located between an engine and a transmission. The hybrid system includes an energy storage system for storing energy from and supplying energy to the hybrid module. An inverter transfers power between the energy storage system and the hybrid module. The hybrid system also includes a cooling system, a DC DC converter, and a high voltage tap. The hybrid module is designed to recover energy, such as during braking, as well as power the vehicle. The hybrid module includes an electrical machine (eMachine) along with electrical and mechanical pumps for circulating fluid. A clutch provides the sole operative connection between the engine and the eMachine. The hybrid system further incorporates a power take off (PTO) unit that is configured to be powered by the engine and/or the eMachine.

No. of Pages : 102 No. of Claims : 55

(12) PATENT APPLICATION PUBLICATION
(21) Application No.649/KOLNP/2013 A
(19) INDIA
(22) Date of filing of Application :08/03/2013
(43) Publication Date : 05/07/2013

(54) Title of the invention : WINDING STRUCTURE, ROTATING ELECTRIC MACHINE, AND ROTATING ELECTRIC MACHINE MANUFACTURING METHOD

(51) International classification :H02K3/28
(31) Priority Document No :2010-211193
(32) Priority Date :21/09/2010
(33) Name of priority country :Japan
(86) International Application No :PCT/JP2011/067894
Filing Date :04/08/2011
(87) International Publication No :WO 2012/039201
(61) Patent of Addition to Application Number :NA
Filing Date :NA
(62) Divisional to Application Number :NA
Filing Date :NA

(71)**Name of Applicant :**
1)NISSAN MOTOR CO., LTD.
Address of Applicant :2, Takara-cho, Kanagawa-ku Yokohama-shi, Kanagawa 221-0023, Japan
(72)**Name of Inventor :**
1)FUKUSHIGE Takashi

(57) Abstract :
The winding structure of a rotating electric machine comprises: a core having slots; and a coil consisting of mutually crossed and assembled first and second windings. Each linear portion of the coil is inserted into either one of the two slots having a certain gap therebetween, and the coil is assembled into the core.

No. of Pages : 30 No. of Claims : 17

(12) PATENT APPLICATION PUBLICATION
(19) INDIA
(22) Date of filing of Application :10/01/2013

(21) Application No.89/KOLNP/2013 A
(43) Publication Date : 05/07/2013

(54) Title of the invention : VACCINES AGAINST CHLAMYDIAL INFECTION

(51) International classification :A61K39/118
(31) Priority Document No :60/667,331
(32) Priority Date :31/03/2005
(33) Name of priority country :U.S.A.
(86) International Application No :PCT/US2006/010793
Filing Date :24/03/2006
(87) International Publication No : WO/2006/104890
(61) Patent of Addition to Application Number :NA
Filing Date :NA
(62) Divisional to Application Number :3876/KOLNP/2007
Filed on :10/10/2007

(71)**Name of Applicant :**
1)GLAXOSMITHKLINE BIOLOGICALS S.A.
Address of Applicant :RUE DE L'INSTITUT 89, B-1330 RIXENSART BELGIUM
2)CORIXA CORPORATION
(72)**Name of Inventor :**
1)BARTH BRENDA
2)BHATIA AJAY
3)ALDERSON MARK
4)MAISONNEUVE JEAN-FRANCOIS L
5)LOBET YVES
6)NOZAY FLORENCE BERNADETTE
7)MARCHAND MARTINE
8)METTENS PASCAL
9)SKEIKY YASIR A
10)PROBST PETER

(57) Abstract :
A composition comprising i) Chlamydia protein Ct-858 or an immunogenic fragment thereof, or a polynucleotide encoding it and ii) one or more Chlamydia proteins or immunogenic fragments thereof, or a polynucleotide or polynucleotides encoding them, selected from Swib, Momp, Ct- 875, Ct-622, Ct-089, passenger domain of PmpG (PmpGpd) and passenger domain of PmpD (PmpDpd).

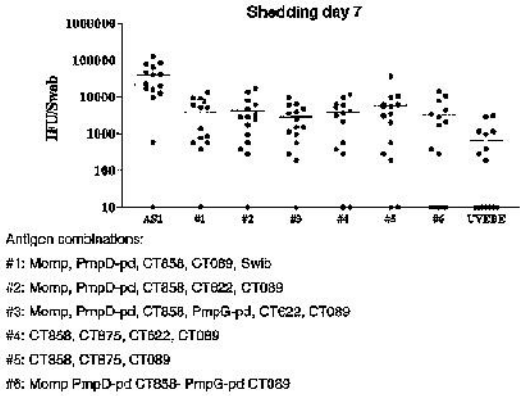

No. of Pages : 119 No. of Claims : 22

(12) PATENT APPLICATION PUBLICATION
(19) INDIA
(22) Date of filing of Application :11/01/2013
(21) Application No.96/KOLNP/2013 A
(43) Publication Date : 05/07/2013

(54) Title of the invention : DEVICE AND METHOD FOR METERING MOLTEN MATERIAL AND CASTING MACHINE

(51) International classification :B22D17/30,B22D39/00
(31) Priority Document No :10169551.8
(32) Priority Date :14/07/2010
(33) Name of priority country :EPO
(86) International Application No :PCT/EP2011/060397
Filing Date :22/06/2011
(87) International Publication No :WO 2012/007255
(61) Patent of Addition to Application Number :NA
Filing Date :NA
(62) Divisional to Application Number :NA
Filing Date :NA

(71)**Name of Applicant :**
1)MELTEC INDUSTRIEOFENBAU GMBH
Address of Applicant :Josef Haas Str. 6 A-4655 Vorchdorf, Austria
(72)**Name of Inventor :**
1)RAPP, Josef
2)RAPP, Roger

(57) Abstract :
The invention relates to a molten material metering device for a casting system, wherein the molten material metering device comprises a metering container which can be evacuated and moved between a melt receiving point and a melt discharge point and which is designed to remove a meterable quantity of molten casting material from a melt bath at the melt receiving point and to transfer said material to the melt discharge point of the casting system and to discharge said material there. The invention also relates to a molten material metering method that can be carried out by using such a device and to a casting machine equipped with such a molten material metering device. A molten material metering device according to the invention comprises an actuatable closure means (5, 6) for selectively opening and closing a melt opening (4) of the metering container, wherein the closure means, in the closed position thereof, closes the melt opening of the metering container, leaving a capillary opening, and/or comprises a weight sensor (40) which is designed to monitor the weight of the empty metering container, as the latter is lowered into the melt bath, with respect to reaching a predefinable submerged position of the metering container.

No. of Pages : 40 No. of Claims : 15

(12) PATENT APPLICATION PUBLICATION
(19) INDIA
(22) Date of filing of Application :06/03/2013
(21) Application No.619/KOLNP/2013 A
(43) Publication Date : 05/07/2013

(54) Title of the invention : PHARMACEUTICAL AND NUTRACEUTICAL COMPOSITIONS OF ABSCISIC ACID

(51) International classification :A61K31/19,A61K31/22
(31) Priority Document No :61/384,020
(32) Priority Date :17/09/2010
(33) Name of priority country :U.S.A.
(86) International Application No :PCT/US2011/052173
Filing Date :19/09/2011
(87) International Publication No :WO 2012/037562
(61) Patent of Addition to Application Number :NA
Filing Date :NA
(62) Divisional to Application Number :NA
Filing Date :NA

(71)**Name of Applicant :**
1)VALENT BIOSCIENCES CORPORATION
Address of Applicant :870 Technology Way, Libertyville, IL 60048 U.S.A.
(72)**Name of Inventor :**
1)HERRERO, Maria, Pilar
2)SHAFER, Warren, E.

(57) Abstract :
The invention relates to compositions comprising abscisic acid,and/or salts,derivatives and analogs thereof,and methods of pharmaceutical and/or nutraceutical use.

No. of Pages : 31 No. of Claims : 11

(12) PATENT APPLICATION PUBLICATION
(19) INDIA
(22) Date of filing of Application :05/03/2013

(21) Application No.606/KOLNP/2013 A
(43) Publication Date : 05/07/2013

(54) Title of the invention : MOBILE COMMUNICATION METHOD AND MOBILE STATION

(51) International classification :H04W24/08,H04W24/10,H04W36/00
(31) Priority Document No :2010-181883
(32) Priority Date :16/08/2010
(33) Name of priority country :Japan
(86) International Application No :PCT/JP2011/068420
Filing Date :12/08/2011
(87) International Publication No :WO 2012/023503
(61) Patent of Addition to Application Number :NA
Filing Date :NA
(62) Divisional to Application Number :NA
Filing Date :NA

(71)**Name of Applicant :**
1)NTT DOCOMO, INC.
Address of Applicant :11-1, Nagatacho 2-chome, Chiyoda-ku, Tokyo 1006150 Japan
(72)**Name of Inventor :**
1)HAPSARI, Wuri Andarmawanti
2)IWAMURA, Mikio

(57) Abstract :
A mobile communication method pertaining to the present invention comprises: a step (A) in which a mobile station (UE) that is in a standby state generates and stores, in a period defined by a Logged MDT measurement period an MDT log containing prescribed information; a step (B) in which the mobile station (UE) generates and stores the abovementioned MDT log when a standby cell is changed; and a step (C) in which the mobile station (UE) sends the stored MDT log to a wireless base station (eNB) after transitioning into an active state.

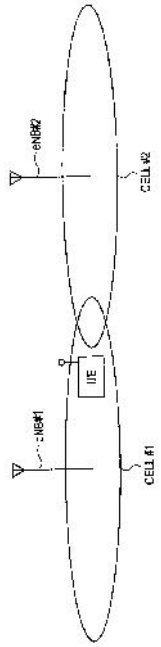

No. of Pages : 15 No. of Claims : 6

(12) PATENT APPLICATION PUBLICATION
(21) Application No.607/KOLNP/2013 A
(19) INDIA
(22) Date of filing of Application :06/03/2013
(43) Publication Date : 05/07/2013

(54) Title of the invention : LEAN NOX TRAP TYPE EXHAUST GAS PURIFYING CATALYST AND EXHAUST GAS CLEANING SYSTEM

(51) International classification :B01J23/58,B01D53/94,F01N3/10
(31) Priority Document No :2011-100747
(32) Priority Date :28/04/2011
(33) Name of priority country :Japan
(86) International Application No :PCT/JP2012/055655
Filing Date :06/03/2012
(87) International Publication No :WO 2012/147411
(61) Patent of Addition to Application Number :NA
Filing Date :NA
(62) Divisional to Application Number :NA
Filing Date :NA

(71)**Name of Applicant :**
1)NISSAN MOTOR CO., LTD.
Address of Applicant :2, Takara-cho, Kanagawa-ku Yokohama-shi, Kanagawa 221-0023, Japan
(72)**Name of Inventor :**
1)NAITO Tetsuro
2)HANAKI Yasunari
3)NAKAMURA Masanori
4)NAGATA Masato

(57) Abstract :
Provided is a lean NOX trap type exhaust gas purification catalyst having excellent durability and an exhaust gas purification system provided with same. The lean NOX trap type exhaust gas purification catalyst contains platinum,palladium and rhodium, which are catalytic noble metals, inorganic oxides that support the catalytic noble metals , and at least one type of NOX adsorbent selected from among the group comprising magnesium, barium, sodium , potassium and cesium. Among the inorganic oxides , an inorganic oxide that supports palladium contains cerium and aluminum and/or zirconium. The inorganic oxide that supports palladium contains 1 to 20 mass % , in terms of CeO2, of cerium. The exhaust gas purification system is provided with the lean NOX trap type exhaust gas purification catalyst and another catalyst which contains a catalytic noble metal and which is positioned on the upstream side of the lean NOX trap type exhaust gas purification catalyst relative to the exhaust gas flow direction.

No. of Pages : 26 No. of Claims : 5

(12) PATENT APPLICATION PUBLICATION
(21) Application No.654/KOLNP/2013 A
(19) INDIA
(22) Date of filing of Application :08/03/2013
(43) Publication Date : 05/07/2013

(54) Title of the invention : WAX BLENDS CONTAINING LONG-CHAIN HYDROCARBONS AND ALCOHOLS, PRINTING INK COMPOSITIONS AND THERMAL TRANSFER RIBBONS CONTAINING SUCH WAX BLENDS, AND USE OF THE WAX BLENDS

(51) International classification :C09D11/00,C09D11/02
(31) Priority Document No :10 2010 044 319.0
(32) Priority Date :03/09/2010
(33) Name of priority country :Germany
(86) International Application No :PCT/DE2011/001675
Filing Date :02/09/2011
(87) International Publication No :WO 2012/048672
(61) Patent of Addition to Application Number :NA
Filing Date :NA
(62) Divisional to Application Number :NA
Filing Date :NA

(71)**Name of Applicant :**
1)SASOL WAX GMBH
Address of Applicant :Worthdamm 13-27, 20457 Hamburg, Germany
(72)**Name of Inventor :**
1)SCHNEIDER, Ulrich
2)KURRAS, Uwe
3)FRICK, Thorsten

(57) Abstract :
The invention relates to wax blends containing long-chain hydrocarbons and alcohols, to printing ink compositions and thermal transfer ribbons containing the wax blends, and to the use of said wax blends as additives in printing inks.

No. of Pages : 14 No. of Claims : 17

(12) PATENT APPLICATION PUBLICATION
(19) INDIA
(22) Date of filing of Application :08/03/2013
(21) Application No.655/KOLNP/2013 A
(43) Publication Date : 05/07/2013

(54) Title of the invention : SURGICAL MESH

(51) International classification :A61F2/00
(31) Priority Document No :61/381,293
(32) Priority Date :09/09/2010
(33) Name of priority country :U.S.A.
(86) International Application No :PCT/US2011/050958
Filing Date :09/09/2011
(87) International Publication No :WO 2012/033996
(61) Patent of Addition to Application Number :NA
Filing Date :NA
(62) Divisional to Application Number :NA
Filing Date :NA

(71)**Name of Applicant :**
1)W. L. GORE & ASSOCIATES, INC.
Address of Applicant :555 Paper Mill Road Newark, DE 19711 U.S.A.
(72)**Name of Inventor :**
1)TOWLER, Jeffrey

(57) Abstract :
An extremely thin surgical mesh with the requisite strength for soft tissue repair deliverable to a surgical site through minimally invasive techniques is provided. Pre packaged forms of the surgical mesh as well as methods of production and use are also provided.

No. of Pages : 29 No. of Claims : 12

(12) PATENT APPLICATION PUBLICATION
(19) INDIA
(22) Date of filing of Application :08/03/2013

(21) Application No.651/KOLNP/2013 A
(43) Publication Date : 05/07/2013

(54) Title of the invention : METHOD FOR THE PRODUCTION OF HIGH-PURITY SILICON

(51) International classification :C01B33/025
(31) Priority Document No :10 2010 044 755.2
(32) Priority Date :08/09/2010
(33) Name of priority country :Germany
(86) International Application No :PCT/EP2011/065577
Filing Date :08/09/2011
(87) International Publication No :WO 2012/032129
(61) Patent of Addition to Application Number :NA
Filing Date :NA
(62) Divisional to Application Number :NA
Filing Date :NA

(71)**Name of Applicant :**
1)SPAWNT PRIVATE S.À.R.L.
Address of Applicant :16, Rue Jean I'Aveugle, L-1148 Luxembourg
(72)**Name of Inventor :**
1)AUNER Norbert
2)BAUCH Christian
3)DELTSCHEW Rumen
4)HOLL Sven
5)MOHSSENI Javad

(57) Abstract :
A method for producing high-purity silicon is described. SiCl4 is produced from SiO2 containing starting materials in a carbochlorination process, and the high-purity silicon is obtained from said SiCl4 in further steps of the method. No elemental silicon is added in any of the steps, resulting a particularly efficient and inexpensive method.

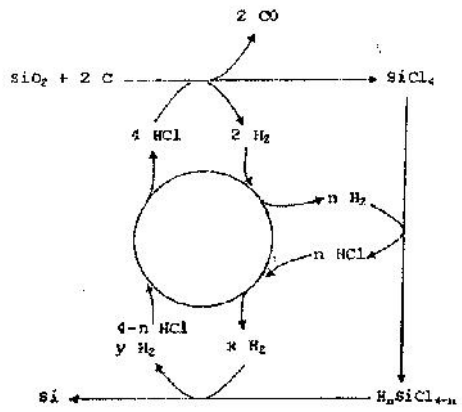

No. of Pages : 31 No. of Claims : 21

(12) PATENT APPLICATION PUBLICATION
(19) INDIA
(22) Date of filing of Application :10/01/2013
(21) Application No.90/KOLNP/2013 A
(43) Publication Date : 05/07/2013

(54) Title of the invention : NOVEL HYDROGENATED SOLVENTS FOR COAL LIQUEFACTION

(51) International classification :C10G 1/04
(31) Priority Document No :61/357,323
(32) Priority Date :22/06/2010
(33) Name of priority country :U.S.A.
(86) International Application No :PCT/US2011/041350
Filing Date :22/06/2011
(87) International Publication No :WO 2011/163300
(61) Patent of Addition to Application Number :NA
Filing Date :NA
(62) Divisional to Application Number :NA
Filing Date :NA

(71)**Name of Applicant :**
1)WEST VIRGINIA UNIVERSITY
Address of Applicant :Chestnut Ridge Research Building, 886 Chestnut Ridge Road, Morgantown, WV 26506-6224, U.S.A.
(72)**Name of Inventor :**
1)STILLER, Alfred, H.
2)CHALIFOUX, Gilbert, A.
3)EBERTH, Ernest, Gordon
4)KENNEL, Elliot, B.
5)STANSBERRY, Peter, G.

(57) Abstract :
The present disclosure provides method and systems for liquefying coal utilizing a hydrogenated solvent, including hydrogenated vegetable oil, a rubber material, a sewage material, and pipeline crude oil. The method includes exposing a coal to one of the hydrogenated solvents in the presence of a coal- derived solvent to form a slurry, elevating the temperature of the slurry to facilitate liquefying the coal and liberating a volatile matter, and separating the insoluble components from the slurry to obtain a de-ashed coal extract, wherein the coal extract is suitable for downstream processing.

No. of Pages : 66 No. of Claims : 29

(12) PATENT APPLICATION PUBLICATION
(21) Application No.77/KOLNP/2013 A
(19) INDIA
(22) Date of filing of Application :10/01/2013
(43) Publication Date : 05/07/2013

(54) Title of the invention : METHOD AND ARRANGEMENT FOR CONTROLLING COLLECTION OF SMOKE GAS SAMPLES

(51) International classification :G01N1/22,F23N5/00
(31) Priority Document No :20105776
(32) Priority Date :07/07/2010
(33) Name of priority country :Finland
(86) International Application No :PCT/FI2011/050638
Filing Date :06/07/2011
(87) International Publication No :WO 2012/004457
(61) Patent of Addition to Application Number :NA
Filing Date :NA
(62) Divisional to Application Number :NA
Filing Date :NA

(71)**Name of Applicant :**
1)TEKNOLOGIAN TUTKIMUSKESKUS VTT
Address of Applicant :Vuorimiehentie 3, 02150 Espoo, Finland
(72)**Name of Inventor :**
1)TSUPARI, Eemeli
2)NIEMINEN, Matti
3)ANTSON, Olli

(57) Abstract :
A method and arrangement for controlling sampling of flue gases by means of which it is possible to control sampling of flue gases for C14 carbon dating. In the method a flue gas sample is taken from the dry flue gas of the combustion plant and it is used for determining the proportions of renewable and fossil fuels using dating based on isotope C14. At least the sampling frequency of the flue gases or the volume flow of the flue gas samples is changed on the basis of the power produced by the combustion plant.

No. of Pages : 11 No. of Claims : 7

Publication Under Section 43(2) in Respect of the Grant

Following Patents have been granted and any person interested in opposing these patents under Section 25(2) may at any time within one year from the date of this issue, give notice to the Controller of Patents at the appropriate office, on the prescribed form-7 along with written statement and evidence, if any.

Serial Number	Patent Number	Application Number	Date of Application	Date of Priority	Title of Invention	Name of Patentee	Date of Publication of Abstract u/s 11(A)	Appropriate Office
1	256517	3670/DELNP/2004	19/06/2003	27/06/2002	CLAMPING ASSEMBLY	THE GLEASON WORKS	09/10/2009	DELHI
2	256521	5031/DELNP/2006	16/03/2005	16/03/2005	MOTION SENSING FOR TIRE PRESSURE MONITORING	FREESCALE SEMICONDUCTOR, INC.	10/08/2007	DELHI
3	256522	2644/DELNP/2006	13/11/2004	27/11/2003	PROCESS FOR THE PREPARATION OF A SOLID, ORALLY ADMINISTRABLE PHARMACEUTICAL COMPOSITION	BAYER PHARMA AKTIENGESELLSCHAFT,	10/08/2007	DELHI
4	256523	668/DEL/2005	29/03/2005		NOVEL POLYSACCHARIDES WITH ANTIOXIDANT PROPERTY	NATIONAL INSTITUTE OF PHARMACEUTICAL EDUCATION AND RESEARCH	01/12/2006	DELHI
5	256525	5014/DELNP/2005	30/04/2004	02/05/2003	INTERMEDIATE BULK CONTAINER	ALMAR PACKAGING INTERNATIONAL INC.	05/10/2007	DELHI
6	256530	1345/DEL/2005	25/05/2005	30/06/2004	A TELECONFERENCE UNIT AND A SYSTEM	POLYCOM, INC.	11/05/2007	DELHI
7	256532	1355/DELNP/2007	18/08/2005	20/08/2004	ULTRAVIOLET LIGHT (UV) ABSORBING COMPOUNDS AND COMPOSITIONS CONTAINING UV ABSORBING COMPOUNDS	MILLIKEN & COMPANY	03/08/2007	DELHI
8	256538	4003/DELNP/2004	18/06/2003	20/06/2002	A FOOT-PROPELLED WHEELED HOBBY OR SPORT DEVICE	M W INNOVATORS LIMITED	04/12/2009	DELHI
9	256539	7045/DELNP/2006	08/06/2005	09/06/2004	PHARMACEUTICAL COMPOSITIONS COMPRISING POLYETHYLENE GLYCOL HAVING A MOLECULAR WEIGHT OF LESS THAN 600 DALTONS	NOVARTIS AG.	31/08/2007	DELHI
10	256547	5806/DELNP/2007	28/12/2004	28/12/2004	MULTIPATH DIVERSITY RECEIVING EQUIPMENT OF CDMA SYSTEM	ZTE CORPORATION	17/08/2007	DELHI
11	256549	985/DEL/2006	12/04/2006	14/04/2005	AN INFORMATION STORAGE MEDIUM	KABUSHIKI KAISHA TOSHIBA	24/08/2007	DELHI

12	256551	5027/DELNP/2006	15/02/2005	15/02/2005	A METHOD OF PRODUCING A CHROMIUM CARBIDE CONTAINING FERRO ALLOY WELDING CONSUMABLE MATERIAL	KEVIN FRANCIS DOLMAN	13/04/2007	DELHI
13	256553	828/DELNP/2006	19/08/2004	19/08/2003	WATER FILTER DEVICE FOR TREATING UNTREATED DRINKING WATER	PUR WATER PURIFICATION PRODUCTS, INC.	10/08/2007	DELHI
14	256564	7536/DELNP/2006	08/06/2005	09/06/2004	A SYSTEM THAT FACILITATES DYNAMIC ACTIVE SET BASED RESTRICTED (ASBR) FREQUENCY SCHEDULING IN A WIRELESS NETWORK ENVIRONMENT	QUALCOMM INCORPORATED,	17/08/2007	DELHI
15	256565	5858/DELNP/2005	17/05/2004	15/05/2003	SYSTEM AND METHOD FOR PROVIDING RING BACK TONES IN COMMUNICATION NETWORK	HUAWEI TECHNOLOGIES CO. LTD.	26/09/2008	DELHI
16	256566	641/DELNP/2004	26/08/2002	24/08/2001	SWITCHABLE MAGNETIC DEVICE	THE AUSSIE KIDS TOY COMPANY PTY LTD.	30/05/2008	DELHI
17	256567	2077/DELNP/2004	05/02/2003	06/02/2002	METHOD AND APPARATUS FOR CONCATENATING AND PIGGYBACKING DATA PACKETS	THOMSON LICENSING S.A	06/04/2007	DELHI
18	256568	922/DEL/2003	23/07/2003		FAUCET COUPLER ASSEMBLY	WHIRLPOOL OF INDIA LIMITED	25/02/2005	DELHI
19	256571	2318/DELNP/2004	03/02/2003	08/02/2002	A BANDPASS FILTER CIRCUITE HAVING AN FE-BASED CORE	METGLAS, INC.	09/10/2009	DELHI
20	256578	2201/DEL/2004	04/11/2004		A POLYHOUSE SOLAR DRIER FOR DRYING FRUITS AND VEGETABLES	DIRECTOR GENERAL	08/09/2006	DELHI
21	256579	7772/DELNP/2006	16/06/2005	16/06/2005	APPARATUS FOR PEELING OFF SHELLS OF MATERIALS	CHOI, BYUNG-KUG	17/08/2007	DELHI
22	256581	1488/DELNP/2003	25/03/2003	28/03/2002	MACHINE STRUCTURE, IN PARTICULAR FOR HANDLING FLUID PRODUCTS	CPS COLOR EQUIPMENT SPA CON UNICO SOCIO	27/05/2005	DELHI

Publication Under Section 43(2) in Respect of the Grant

Following Patents have been granted and any person interested in opposing these patents under Section 25(2) may at any time within one year from the date of this issue, give notice to the Controller of Patents at the appropriate office, on the prescribed form-7 along with written statement and evidence, if any.

Serial Number	Patent Number	Application Number	Date of Application	Date of Priority	Title of Invention	Name of Patentee	Date of Publication of Abstract u/s 11(A)	Appropriate Office
1	256515	1179/MUM/2008	03/06/2008	18/06/2007	ELECTROCHEMICAL COMPOSITION AND ASSOCIATED TECHNOLOGY	ADVANCED LITHIUM ELECTROCHEMISTRY CO., LTD	26/06/2009	MUMBAI
2	256516	2096/MUMNP/2009	13/05/2008	14/05/2007	MONO-HYDROCHLORIC SALTS OF AN INHIBITOR OF HISTONE DEACETYLASE.	JANSSEN PHARMACEUTICA NV	18/06/2010	MUMBAI
3	256518	1527/MUM/2007	08/08/2007		BONNET OF A VEHICLE WITH AN INTEGRATED AIR DUCT	MAHINDRA & MAHINDRA LTD.	16/11/2007	MUMBAI
4	256519	455/MUMNP/2008	12/08/2005	12/08/2005	BEE FRAME	TODOROVSKI, SRDJAN	28/03/2008	MUMBAI
5	256520	2056/MUM/2007	16/10/2007		AN IMPROVED SOLID-STATE POLYMERIZATION PROCESS FOR THE PRODUCTION OF HIGH MOLECULAR WEIGHT POLYETHYLENE TEREPHTHALATE	RELIANCE INDUSTRIES LTD.	12/06/2009	MUMBAI
6	256524	570/MUMNP/2008	14/07/2006	15/10/2005	METHOD FOR OPERATING A TEXTILE MACHINE	OERLIKON TEXTILE GMBH & CO. KG	11/07/2008	MUMBAI
7	256527	272/MUM/2008	07/02/2008 16:14:04	07/03/2007	WORKSTATION FOR A TEXTILE MACHINE PRODUCING CROSS-WOUND BOBBINS	OERLIKON TEXTILE GMBH & CO. KG	12/06/2009	MUMBAI
8	256528	2508/MUM/2010	09/09/2010 17:01:21		AN IMPROVED DISTILLATION & SOXHLET COOLING ASSEMBLY FOR SAVING WATER FOR WASTAGE	PATIL RAJESH CHANDRAKANT	15/10/2010	MUMBAI
9	256542	998/MUM/2007	29/05/2007 14:56:46		POLYPROPYLENE FILM BASED SHEETS	RELIANCE INDUSTRIES LIMITED	20/02/2009	MUMBAI
10	256548	689/MUM/2007	05/04/2007		A PROCESS FOR THE MANUFACTURE OF ZINC OXIDE USING ZINC	UMAPRASAD MAHAPATRA	23/01/2009	MUMBAI
11	256552	2136/MUMNP/2008	09/03/2007	15/03/2006	ELECTRONIC SCALES AND METHOD FOR THE OPERATION THEREOF	SARTORIUS WEIGHING TECHNOLOGY GMBH	16/01/2009	MUMBAI

12	256555	281/MUMNP/2008	19/07/2006	19/07/2005	METHOD FOR MAKING OPTIONALLY SUBSTITUTED DIARYL ALKYL PHOSPHONATE	FRX POLYMERS LLC,FRX POLYMERS, INC.	07/03/2008	MUMBAI
13	256570	80/MUM/2009	13/01/2009		EUROPIUM ACTIVATED PHOSPHOR COMPOSITION	RAMDEOBABA KAMLA NEHRU ENGINEERING COLLEGE (RKNEC)	23/07/2010	MUMBAI
14	256583	160/MUM/2004	13/02/2004	24/02/2003	METHOD FOR GENERATING WEB CONTENT	MICROSOFT CORPORATION	08/06/2007	MUMBAI

Publication Under Section 43(2) in Respect of the Grant

Following Patents have been granted and any person interested in opposing these patents under Section 25(2) may at any time within one year from the date of this issue, give notice to the Controller of Patents at the appropriate office, on the prescribed form-7 along with written statement and evidence, if any.

Serial Number	Patent Number	Application Number	Date of Application	Date of Priority	Title of Invention	Name of Patentee	Date of Publication of Abstract u/s 11(A)	Appropriate Office
1	256529	3143/CHENP/2006	28/01/2005	30/01/2004	METHOD FOR THE MANUFACTURE OF CARBOXYALKYLINULIN	KONINKLIJKE COOPERATIE COSUN U.A. ,THERMPHOS TRADING GMBH	08/06/2007	CHENNAI
2	256535	4654/CHENP/2006	09/06/2005	18/06/2004	NMR METHOD OF DETERMINING AND REGULATING THE COMPOSITION OF POLYMER MIXTURES IN POLYMERIZATION	BASELL POLYOLEFINE GMBH	29/06/2007	CHENNAI
3	256540	1801/CHE/2006	28/09/2006		SYSTEM AND METHOD TO ENABLE COMBINATION OF NETWORK CONTROLLED MOBILITY AND UE CONTROLLED MOBILITY BETWEEN DIFFERENT IP VERSIONS	SAMSUNG INDIA SOFTWARE OPERATIONS PRIVATE LIMITED	28/11/2008	CHENNAI
4	256543	32/CHE/2007	05/01/2007 15:51:14		AUTOLOCK SLIDER FOR SLIDE FASTENER	SGI VENTURE PRIVATE LIMITED	28/11/2008	CHENNAI
5	256544	1795/CHENP/2007	26/10/2005	29/10/2004	SAFETY SCALPEL	MEDIPURPOSE PTE. LTD.	31/08/2007	CHENNAI
6	256545	2397/CHENP/2007	27/10/2005	04/11/2004	CLEANING DEVICE FOR FIBRE FLOCKS	MASCHINENFABRIK RIETER AG	07/09/2007	CHENNAI
7	256554	649/CHE/2004	07/07/2004	18/07/2003	SOLVENT-CONTAINING COATING COMPOSITIONS	EVONIK DEGUSSA GMBH	14/08/2009	CHENNAI
8	256556	1127/CHE/2006	30/06/2006		METHOD FOR ADDITION OF VIDEO THUMBNAIL IN A VIDEO FILE	SAMSUNG INDIA SOFTWARE OPERATIONS PRIVATE LIMITED	09/05/2008	CHENNAI
9	256557	2412/CHENP/2008	14/11/2006	17/11/2005	A PROCESS FOR THE PREPARATION OF SILANE-MODIFIED POLYVINYL ALCOHOLS	WACKER CHEMIE AG	06/03/2009	CHENNAI
10	256558	593/CHE/2006	31/03/2006		A METHOD FOR FAST ROUTER ADVERTISMENT	SAMSUNG INDIA SOFTWARE OPERATIONS PRIVATE LIMITED	23/11/2007	CHENNAI

11	256559	5392/CHENP/2008	10/04/2007	12/04/2006	A PROCESS FOR PRODUCING SUSTAINED-RELEASE TABLETS	NIPPON SODA CO; LTD.	20/03/2009	CHENNAI
12	256560	4750/CHENP/2006	23/06/2005	26/06/2004	METHOD AND DEVICE FOR THE PRODUCTION OF MOLDED CELLULOSE BODIES	THUERINGISCHES INSTITUT FUR TEXTIL-UND KUNSTSTOFFFORSCHUNG E V	29/06/2007	CHENNAI
13	256563	2815/CHENP/2007	09/12/2003	09/12/2002	DOWNLOAD AND DISPLAY OF SYSTEM TAGS IN WIRELESS COMMUNICATION SYSTEMS	QUALCOMM INCORPORATED	07/09/2007	CHENNAI
14	256569	2078/CHENP/2008	12/10/2006	27/10/2005	A HOT FORMED COATED STEEL PART AND A PROCESS FOR MANUFACTURING THE SAME	ArcelorMittal France	27/02/2009	CHENNAI
15	256572	633/CHE/2006	06/04/2006		IMMOBILIZING MATRIX FROM BAGASSE FOR BACTERIAL BIOMASS AND A PROCESS FOR PREPARATION THEREOF	INDIAN COUNCIL OF AGRICULTURAL RESEARCH	28/12/2007	CHENNAI
16	256573	2895/CHENP/2004	28/05/2003	24/06/2002	PASSIVE OPTICAL COMPONENT	HEMOCUE AB	17/02/2006	CHENNAI
17	256574	3170/CHENP/2004	20/08/2003	20/08/2002	CATHETER FOR TREATING OF ARRHYTHMIA	TORAY INDUSTRIES, INC.	03/03/2006	CHENNAI
18	256575	2759/CHENP/2004	11/06/2003	11/06/2003	PROCESS FOR APPLYING AN ADHESION PRIMER TO A WINDOW	DOW GLOBAL TECHNOLOGIES , LLC	02/10/2006	CHENNAI
19	256577	4530/CHENP/2006	02/06/2005	11/06/2004	METHOD FOR MODIFYING FIBROUS SUBSTRATES WITH SILOXANE COPOLYMERS	WACKER CHEMIE AG	29/06/2007	CHENNAI
20	256580	2689/CHENP/2004	28/04/2003	29/04/2002	A COMPOSITION FOR INCREASING THE THERAPEUTIC RESPONSE TO ELECTROCONVULSIVE THERAPHY	CORCEPT THERAPEUTICS,INC	10/02/2006	CHENNAI
21	256582	5700/CHENP/2007	16/06/2006	22/07/2005	IMAGE DECODER	MITSUBISHI ELECTRIC CORPORATION	28/03/2008	CHENNAI

Publication Under Section 43(2) in Respect of the Grant

Following Patents have been granted and any person interested in opposing these patents under Section 25(2) may at any time within one year from the date of this issue, give notice to the Controller of Patents at the appropriate office, on the prescribed form-7 along with written statement and evidence, if any.

Serial Number	Patent Number	Application Number	Date of Application	Date of Priority	Title of Invention	Name of Patentee	Date of Publication of Abstract u/s 11(A)	Appropriate Office
1	256526	3845/KOLNP/2006	28/06/2005	02/07/2004	A METHOD FOR PRODUCING AN OPHTHALMIC LENS AND AN OPTICAL COMPONENT FOR OPTHLAMIC LENS	ESSILOR INTERNATIONAL(COMPAGNIE GENERALE D'OPTIQUE)	22/06/2007	KOLKATA
2	256531	440/KOL/2009	12/03/2009		A METHOD FOR FORMING EASY TO REMOVE OXIDE SCALES FOR HIGH CARBON RODS	TATA STEEL LIMITED	21/01/2011	KOLKATA
3	256533	380/KOLNP/2007	19/07/2005	03/08/2004	COMPOSITION CONTAINING STATINS AND OMEGA-3 FATTY ACIDS	SIGMA-TAU INDUSTRIE FARMACEUTICHE RIUNITE S.P.A.	06/07/2007	KOLKATA
4	256534	4539/KOLNP/2007	15/09/2005	26/05/2005	INSULATING DOUBLE AND TRIPLE GLAZING UNIT FOR AN OPENING LEAF OF A REFRIGERATED ENCLOSURE AND THE OPENING LEAF AND THE REFRIGERATED ENCLOSURE	SAINT-GOBAIN GLASS FRANCE	02/01/2009	KOLKATA
5	256536	714/KOL/2007	08/05/2007	07/06/2006	METHOD AND APPARATUS FOR PREDICTING CHANGE IN AN OPERATING STATE OF AN ELECTRIC ENERGY STORAGE DEVICE	GM GLOBAL TECHNOLOGY OPERATIONS, INC	21/12/2007	KOLKATA
6	256537	2462/KOLNP/2008	23/11/2006	01/12/2005	METHOD FOR PRODUCING SULFONAMIDES	BASF SE	23/01/2009	KOLKATA
7	256541	2500/KOLNP/2007	22/12/2005	29/12/2004	RECOMBINANT NUCLEIC ACID MOLECULE, VECTOR COMPRISING IT AND POLYPEPTIDE ENCODED BY IT	ATHENIX CORPORATION	24/08/2007	KOLKATA
8	256546	1683/KOLNP/2008	31/10/2006	31/10/2005	METHOD FOR MANUFACTURE OF SANITISED ORGANIC SLUDGE	AGRONOVA AS	26/12/2008	KOLKATA

9	256550	2332/KOLNP/2007	10/01/2006	10/01/2005	METHOD AND APPARATUS FOR REQUESTING ALLOCATION OF A CHANNEL QUALITY INFORMATION CHANNEL	SAMSUNG ELECTRONICS CO. LTD.	17/08/2007	KOLKATA
10	256561	1752/KOLNP/2007	11/11/2005	23/11/2004	ACTUATOR ARRANGEMENT WITH SELECTOR DRUMS HAVING CONTROL CAM, CONTROLLABLE DRIVE MOTOR DRIVING THE SELECTOR DRUM THROUGH 360 AND DISTRIBUTED GEAR STAGES FOR A TWIN CLUTCH TRANSMISSION	GETRAG GETRIEBE-UND ZAHNRADFABRIK HERMANN HAGENMEYER GMBH & CIE KG.	10/08/2007	KOLKATA
11	256562	186/KOL/2008	31/01/2008	06/02/2007	A SYSTEM AND METHODS OF REGULATING OPERATION OF AN AUTOMATIC TRANSMISSION	GM GLOBAL TECHNOLOGY OPERATIONS, INC.	22/08/2008	KOLKATA
12	256576	742/KOL/2006	24/07/2006		NOVEL METASTABLE CHELATE COMPLEX OF CALCIUM MAGNESIUM LACTATE GLUCONATE AND PROCESS FOR ITS PRODUCTION	GLOBAL CALCIUM PVT. LTD.	22/02/2008	KOLKATA

CONTINUED TO PART- 2