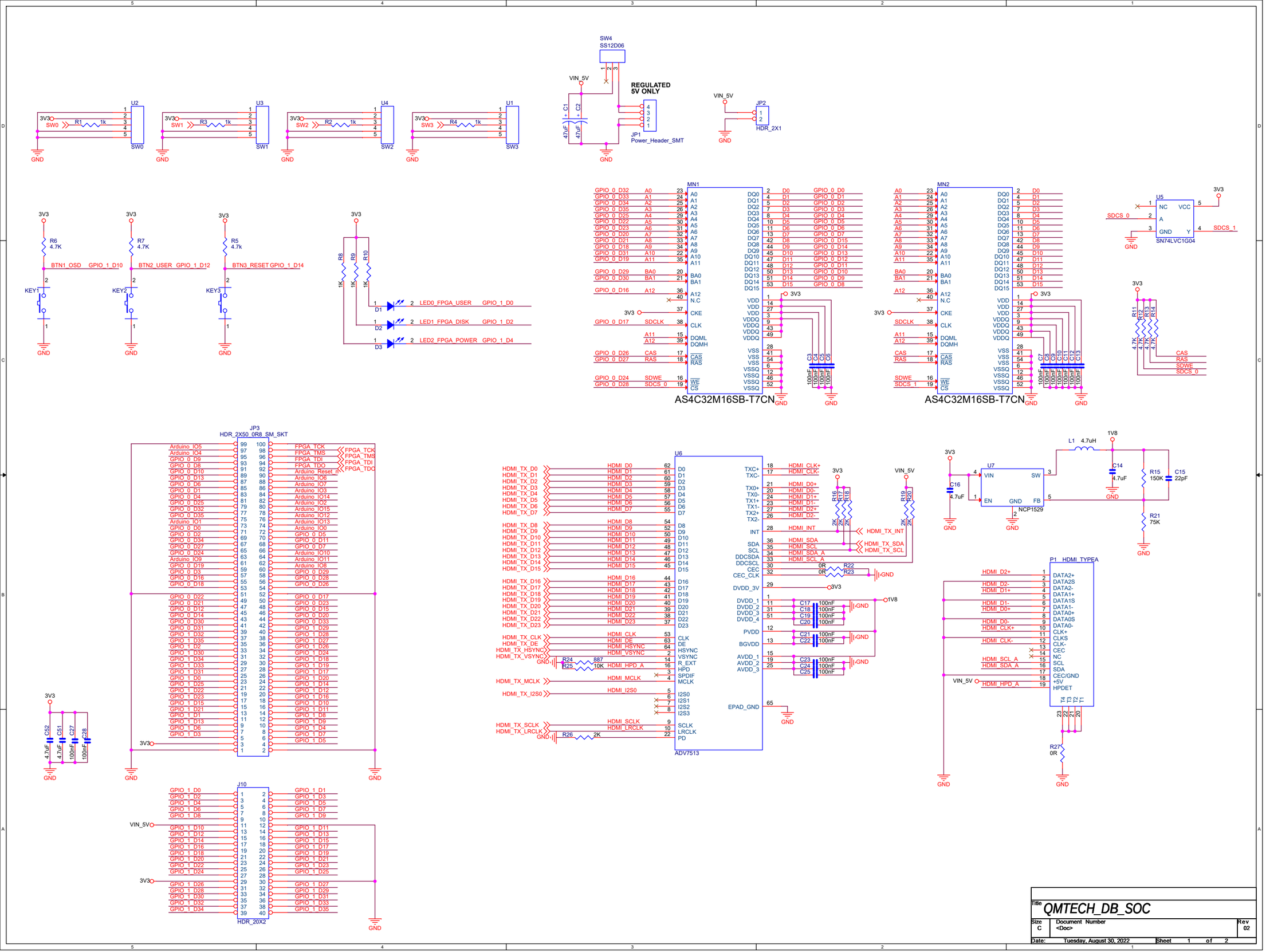

Title: QMTECH_DB_SOC

Size: C | Document Number: <Doc> | Rev: 02

Date: Tuesday, August 30, 2022 | Sheet 1 of 2

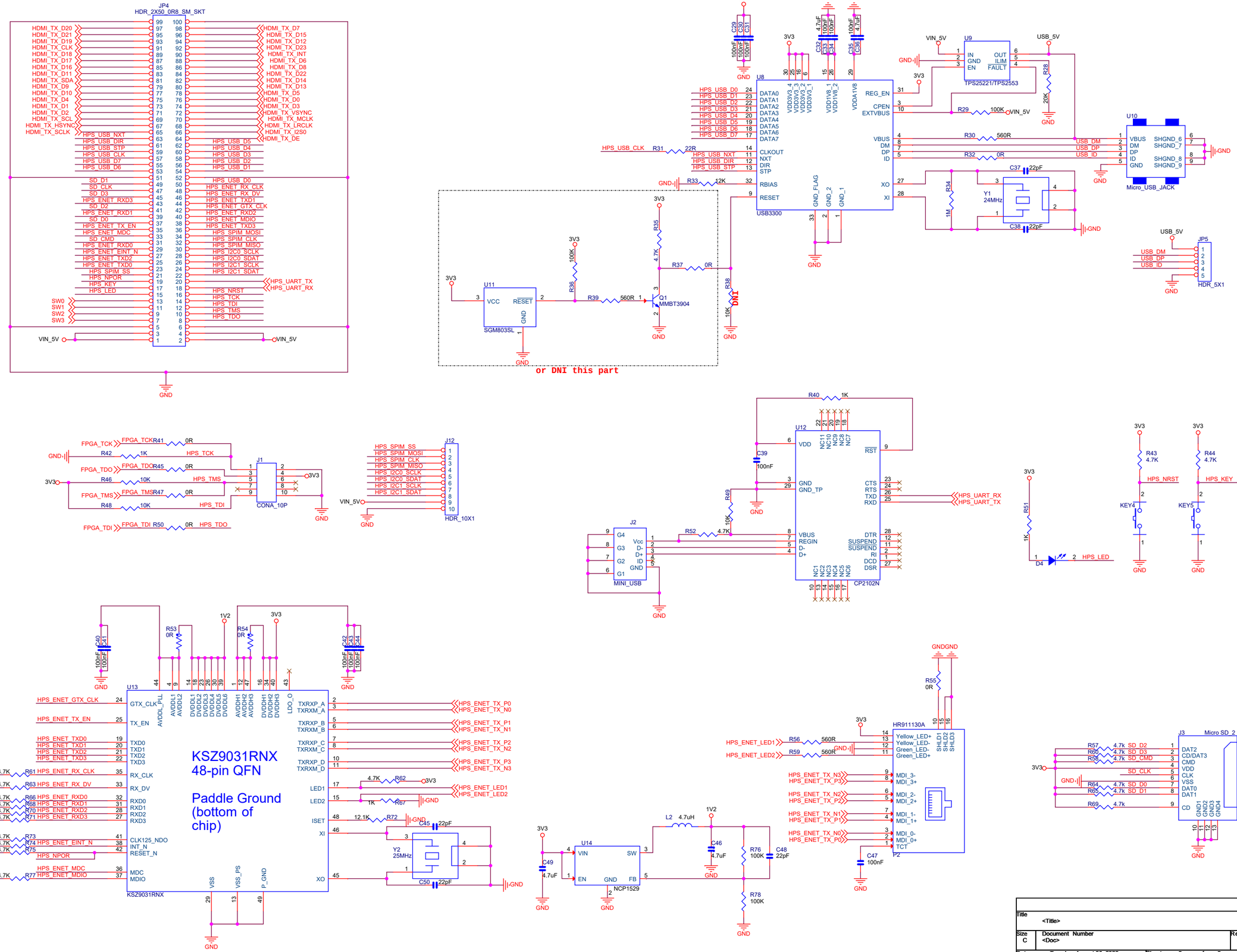
JP4
HDR_2X50_0R8_SM_SKT
U8
USB3300
U9
TPS25221/TPS2553
U10
Micro_USB_JACK
JP5
HDR_5X1
U11
SGM803SL
Q1
MMBT3904
or DNI this part
U12
CP2102N
J2
MINI_USB
J1
CONA_10P
J12
HDR_10X1
KEY4
KEY5
D4
U13
KSZ9031RNX
KSZ9031RNX
48-pin QFN
Paddle Ground
(bottom of
chip)
Y2
25MHz
U14
NCP1529
HR911130A
J3
Micro SD_2
Title
<Title>
Size
C
Document Number
<Doc>
Rev
1
Date:
Tuesday, August 30, 2022
Sheet
2
of
2