Chipsee

Industrial Displays

PIM-101-C

PN: CS-D101

Revision 1.1

www.chipsee.com

Contents

PIM-101-C 3

1. Product Overview 6
2. Ordering Options 6
3. Specification 6
4. Mounting Procedure 7
5. Mechanical Specifications 7
6. Disclaimer 9
7. Technical Support 9

PIM-101-C

Front View

Rear View

AUTO
LEFT
RIGHT
MENU
POWER
Chipsee
Product:PIM-101-C
Type:CS-D101
SN:2022042640000127
https://chipsee.com
Origin:Made in China

Side View

Product Overview

PIM-101-C (PN: CS-D101) is a 10.1" industrial display that features a 10-point capacitive touch screen with a resolution of 1280 x 800 (4:3) pixels and brightness of 350 cd/m^2. The 3mm tempered glass with black silk-screen ensures the screen is water and steam resistant.

The typical power consumption is ≤ 14W, while in standby mode, PIM-101-C uses around ≤ 2W, making it ideal for all kinds of applications.

Ordering Options

Most of the Chipsee products can be customized during the ordering process. The product will be shipped with the pre-installed factory defaults if no extra requirements are specified. The table in the Specification section provides information about the product.

> **Note**
>
> You can order PIM-101-C from the official Chipsee Store or from your nearest distributor.

Specification

PIM-101-C			
Backlight	Led	**Type of Pen**	Fingers, Hands with Gloves, Conductive Stylus
Brightness	350 cd/m^2	**Waterproof**	Touch surfaces will not be affected by water droplets or steam
Contrast Ratio	600:1	**Calibration**	No Calibration Tool
Viewing Angle	Horizontal: 170° / Vertical: 170°	**Response Time**	7ms to 12ms
Response Time	35ms (GTG)	**Connect**	1 x USB 2.0 (Type-B)
Display Color	16.2M Colors	**Multi Touch Protocol Support**	Windows
Display Resolution	1280 x 800 (4:3)	**Operating System**	Windows 7/8, Android, Linux
Refresh Frequency	60Hz	**Dimensions**	253.20 x 171.8 x 35mm
Input Resolution	1280 x 800 (4:3) @ 60Hz	**Packaging Size**	332 x 225 x 60mm

PIM-101-C			
Connector	VGA / DVI / HDMI	**Weight**	1.1kg
Built-in Speaker	N/A	**Mounting Methods**	VESA, Panel
OSD Control	Button	**Power Input**	12V 3A DC(default), 9V-30V DC(optional)
OSD Language	English, Chinese	**Power Supply**	≤ 14W
Glass	3mm Tempered Glass with Black Silk-screen	**Standby Power**	≤ 2W
Touch Point	10	**Work Environment (temp.)**	From -20°C to +70°C, 90% RH
Touch Technology	Projecting Capacitance (G+G)	**Storage Environment**	From -30°C to +80°C, 90% RH
Accessories	Bracket / Power Line / VGA Line / USB Line / Power Adapter		

Table 503 Key Features

Mounting Procedure

The PIM-101-C industrial display supports VESA 100 x 100 mounting pattern with 4 x M4 screws, enabling simplified installation onto any standard VESA mounting rack. Other mounting options might also be supported according to the table in the Specification section.

You can find detailed information about mounting in the Mount IPC Guide.

Mechanical Specifications

The outer mechanical dimensions of The PIM-101-C industrial display are 253.20 x 171.8 x 35mm (W x L x H). Please refer to the technical drawing in the figure below for details related to the specific product measurements.

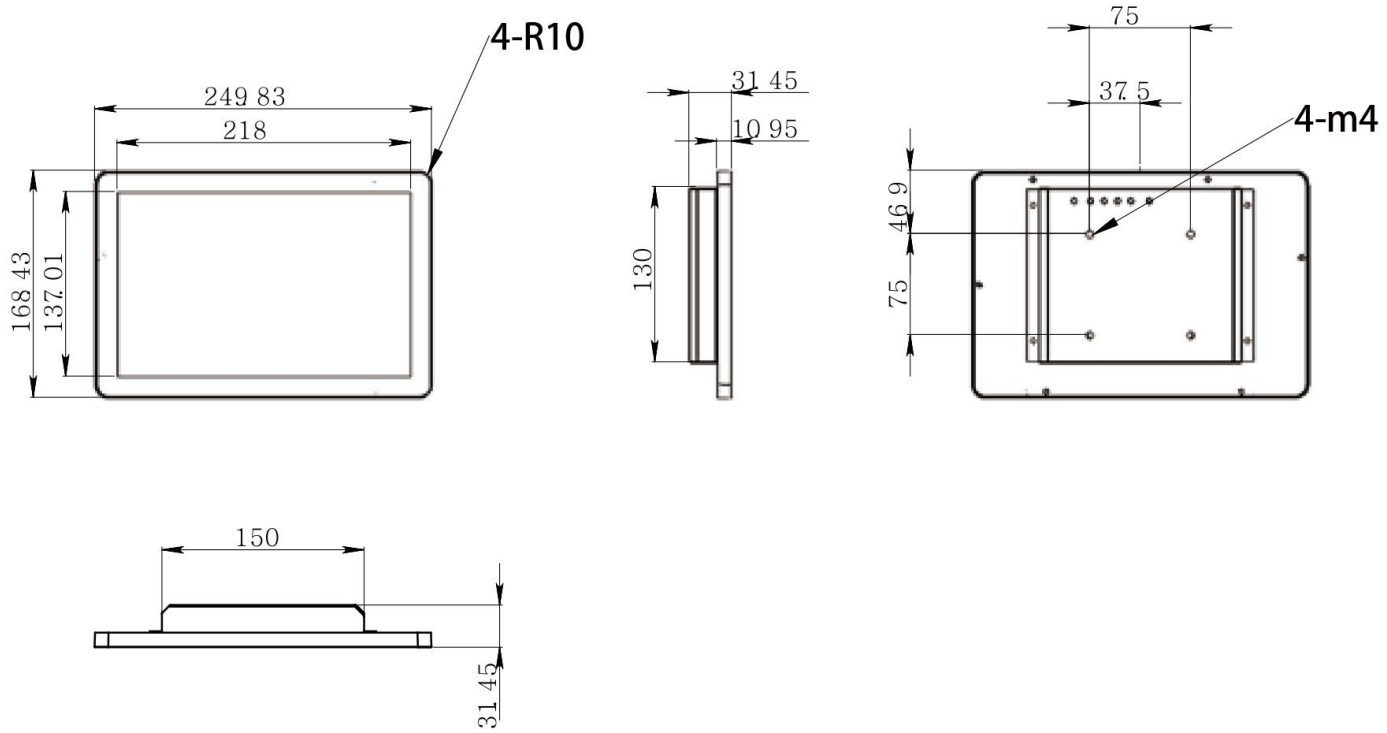

Figure 1020: Technical Drawing

Disclaimer

This document is provided strictly for informational purposes. Its contents are subject to change without notice. Chipsee assumes no responsibility for any errors that may occur in this document. Furthermore, Chipsee reserves the right to alter the hardware, software, and/or specifications set forth herein at any time without prior notice and undertakes no obligation to update the information contained in this document.

While every effort has been made to ensure the accuracy of the information contained herein, this document is not guaranteed to be error-free. Further, it does not offer any warranties or conditions, whether expressed orally or implied in law, including implied warranties and conditions of merchantability or fitness for a particular purpose. We specifically disclaim any liability with respect to this document, and no contractual obligations are formed either directly or indirectly by this document.

Despite our best efforts to maintain the accuracy of the information in this document, we assume no responsibility for errors or omissions, nor for damages resulting from the use of the information herein. Please note that Chipsee products are not authorized for use as critical components in life support devices or systems.

Technical Support

If you encounter any difficulties or have questions related to this document, we encourage you to refer to our other documentation for potential solutions. If you cannot find the solution you're looking for, feel free to contact us. Please email Chipsee Technical Support at **support@chipsee.com**, providing all relevant information. We value your queries and suggestions and are committed to providing you with the assistance you require.