Industrial PC

EPC/PPC-A8-097-C

PN: CS10768T097

Content can change at anytime, check our website for latest information of this product.
www.chipsee.com

Contents

EPC/PPC-A8-097-C 3

1. Product Overview 7

2. Ordering Options 8

2.1. Operating System 8

2.2. Optional Features 9

3. Hardware Features 10

4. Power Input 12

5. Touch Screen 13

6. Connectivity 14

6.1. RS232/RS485/CAN 14

6.2. USB Connectors 16

6.3. LAN Connectors 17

6.4. WiFi & BT Module 18

6.5. 3G/4G/LTE Module 19

6.6. GPIO Port 20

7. TF Card Slot 22

8. Audio Connectors 23

9. Boot DIP Switch 24

10. Mounting Procedure 25

11. Mechanical Specifications 25

11.1. EPC-A8-097-C 25

11.2. PPC-A8-097-C 25

12. Disclaimer 27

13. Technical Support 27

EPC/PPC-A8-097-C

Note

EOL PRODUCT: This product has been discontinued, due to market demand and shifts in technology. Please **Contact us** if you would like to purchase it.

Front View

Rear View

P1
GND
CAN_L
CAN_H
A2
B2
A1
B1
TXD2
RXD2
TXD1
RXD1
+ 5V
+ 5V
GND
OUT1
OUT2
OUT3
OUT4
IN1
IN2
IN3
IN4
P2
+
-
G
P3
(DC:6~42V)
LAN
HOST
OTG

Front View (Embedded Variant)

Rear View (Embedded Variant)

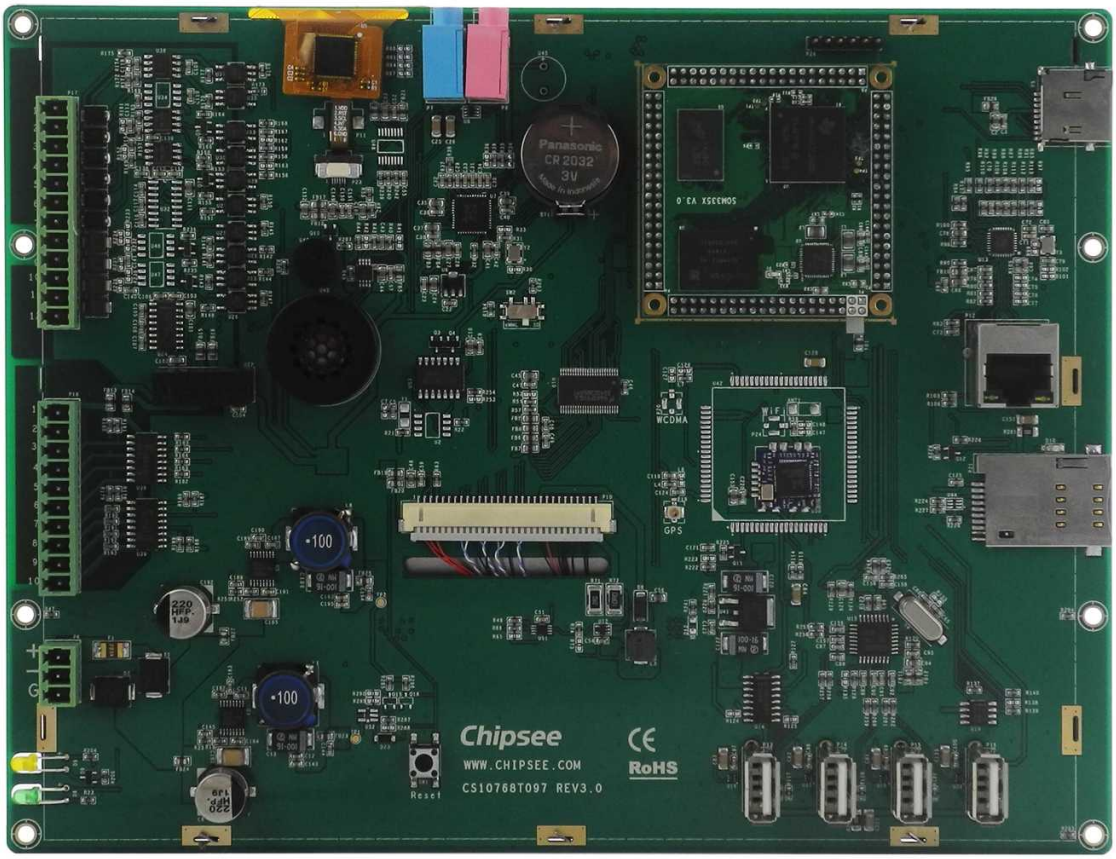

Product Overview

The Cortex®-A8 series EPC/PPC-A8-097-C (PN: CS10768T097) is a high-quality industrial PC. This single board computer features a 9.7" resistive touch screen with a resolution of 1024 x 768 pixels and brightness of 350 cd/m^2.

Key Applications

- Human Machine Interface HMI
- Process Control
- Process Monitoring
- HMI
- Infotainment
- Predictive Maintenance
- Machine Learning
- Machine Vision
- Automotive applications
- Gaming...

It is available both as an embedded solution and as a device hosed in an aluminum casing with bezels, thus facilitating different installation options:

- Installation on an industrial cabinet
- Integration with the existing equipment

The EPC/PPC-A8-097-C Industrial PC is based around the powerful CS-SOM335X-V3 System on Module (SoM), powered by the AM3354 Arm® Cortex®-A8 microprocessor unit (MPU). The AM33554 MPU is enhanced with image, graphics processing, peripherals and industrial interface options such as EtherCAT and PROFIBUS. The devices support high-level operating systems (HLOS).

The microprocessor unit (MPU) subsystem is based on the ARM Cortex-A8 processor and the PowerVR SGX™ Graphics Accelerator subsystem provides 3D graphics acceleration to support display and gaming effects.

The AM33554 MPU does not generate extensive heat, so even the thin aluminum housing on PPC version delivers sufficient thermal dissipation.

Ordering Options

Chipsee products can be customized during the ordering process. The product will be shipped with the pre-installed factory defaults if no extra requirements are specified. The table in the Hardware Features section provides information about the default options bundled with the product.

> **Note**
>
> You can order EPC/PPC-A8-097-C from the official Chipsee Store or from your nearest distributor.

Operating System

This product comes with a pre-installed OS of your choice. Please see the list below for the supported OSes, which can be also obtained from the Software Documentation section, along with the detailed installation instructions.

- Android 4.1
- Linux with Qt 4.8
- Linux with Qt 5.5
- Debian 7.4
- Debian 8.4
- Angstorm v2012.12

> **Warning**
>
> The Software Documentation section provides a detailed instruction how to install different OS on your own. However, bear in mind that Chipsee can't take the responsibility of inadequate installation procedure. If you "brick" your device, please contact Chipsee Technical Support at **support@chipsee.com** for further assistance

Optional Features

The EPC/PPC-A8-097-C Industrial PC does not include WiFi/BT and/or 3G/4G modules by default. The Wi-Fi/BT module is optional and can be selected during the ordering process.

A 3G/4G LTE module is not available at the Chipsee store for this product. However, it can be obtained from specialized third-party suppliers.

> **Warning**
>
> Installation, repair, and maintenance tasks should be performed by trained personnel only.
> Chipsee does not bear any responsibility for damage caused by inadequate handling of the product.

Hardware Features

The EPC/PPC-A8-097-C Industrial PC offers a board range of performance and connectivity options for scalable integration, providing expandability according to future needs. Some of the key features are listed in the table below.

EPC/PPC-A8-097-C	
CPU	AM3354ZCZ100, Arm® Cortex®-A8, 1GHz
RAM	512MB DDR3
eMMC	4GB
Storage	TF Card, Supports up to 32GB SDHC
Display	9.7" LCD, 1024 x 768 resolution px, brightness 350 cd/m^2
Touch	5-point capacitive touch screen
USB	3 x USB 2.0 Host, 1 x USB OTG
LAN	1 x Channel 100M LAN
Audio	3.5mm output/input connector, 2W Internal Speaker
Buzzer	Yes
RTC	Yes
RS232	2 x RS232
RS485	2 x RS485[1]
CAN	1 x CAN[1]
GPIO	8 Channels
WiFi/BT	Onboard WiFi/BT (optional)
Expansion Port	N/A
3G/4G/LTE	WCDMA+GPS Module (optional)
Power Input	From 6V to 42V
Current at 12V	800mA Max
Power Consumption	7W Typical
Working Temperature	From -20°C to +70°C
OS	Multiple Choices (Operating System)
Dimensions	EPC-A8-097-C (PN: CS10768T097E): 226 x 172 x 28mm
	PPC-A8-097-C (PN: CS10768T097P): 252 x 205 x 33mm
Weight	EPC-A8-097-C (PN: CS10768T097E): 610g
	PPC-A8-097-C (PN: CS10768T097P): 1260g

EPC/PPC-A8-097-C	
Mounting	EPC-A8-097-C (PN: CS10768T097E): Embedded
	PPC-A8-097-C (PN: CS10768T097P): Panel

Table 273 Key Features

1(1,2) The RS485 and CAN channels may be customized to the following arrangement:

- 2 x RS485, 1 x CAN (Default)
- 1 x RS485, 2 x CAN

Power Input

The EPC/PPC-A8-097-C Industrial PC can be powered by a wide range of input voltages: From 6V to 42V DC. The power input connector is a **3-pin, 3.81mm terminal**. The polarity and the pinout is clearly marked on the housing of the PPC version, as well as on the PCB itself of the EPC version, as shown in the figure below.

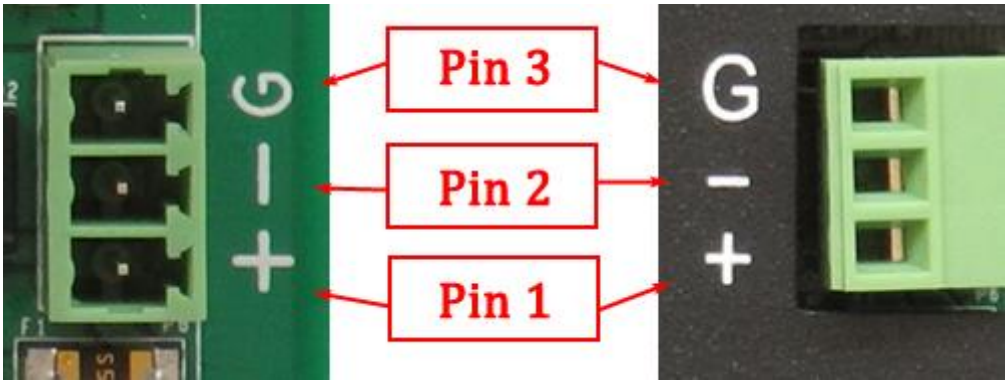

Figure 754: *Power Input (embedded/enclosed version)*

Note that the "**+**" sign represents the positive power input, and it is printed both at the casing and as a silk-screen on a PCB of the embedded version. The "**-**" terminal is shorted to the ground.

Power Input Definition		
Pin Number	**Definition**	**Description**
Pin 1	Positive Input	DC Power **Positive Terminal**
Pin 2	Negative Input	DC Power **Negative Terminal**
Pin 3	Ground	**Power System Ground**

Table 274 Power Connector

> **Note**
>
> The system ground "**G**" is connected to power negative "**-**" on board.

Touch Screen

The EPC/PPC-A8-097-C Industrial PC uses a 5-point capacitive touch screen screen. The figure below shows the capacitive or resistive screen connected to the motherboard via the **FPC connector**.

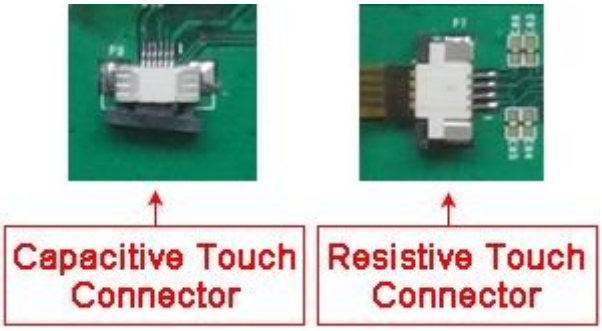

Figure 755: *Capacitive or Resistive Touch Connector*

Attention

A capacitive touch screen is susceptible to power noise and Electromagnetic Radiation (EMR). It may cause LCD ripples or even capacitive touch malfunction. If using a capacitive multi-touch test application, you might notice the touch points float erratically across the display. There are several solutions to this problem:

1. Use a high-quality Power Adapter Unit (PSU) with low EMR. You can also provide power from a battery.
2. Make sure that the EPC/PPC-A8-097-C Power Input connector (pin 3) is properly connected to the Power System Ground to provide sufficient EMI shielding and eliminate the problem entirely.
3. Bad GND problem can also be confirmed by touching pin 3 of the Power Input connector with one hand while operating the capacitive touch screen with the other hand. In this case, the operator's body acts as the Power System Ground.

Connectivity

There are many connectivity options available on the EPC/PPC-A8-097-C industrial PC. It has 3 x USB 2.0 Host, 1 x USB OTG (can be customized to 2 x Host), 1 x Channel 100M LAN (RJ45) Ethernet connector supporting up to 1 Gbps, and 5 x UART terminals (RS232/RS485).

RS232/RS485/CAN

The serial communication interfaces (RS485, RS232, and CAN) are routed to a **12-pin 3.81mm terminal**, as illustrated on the figure below.

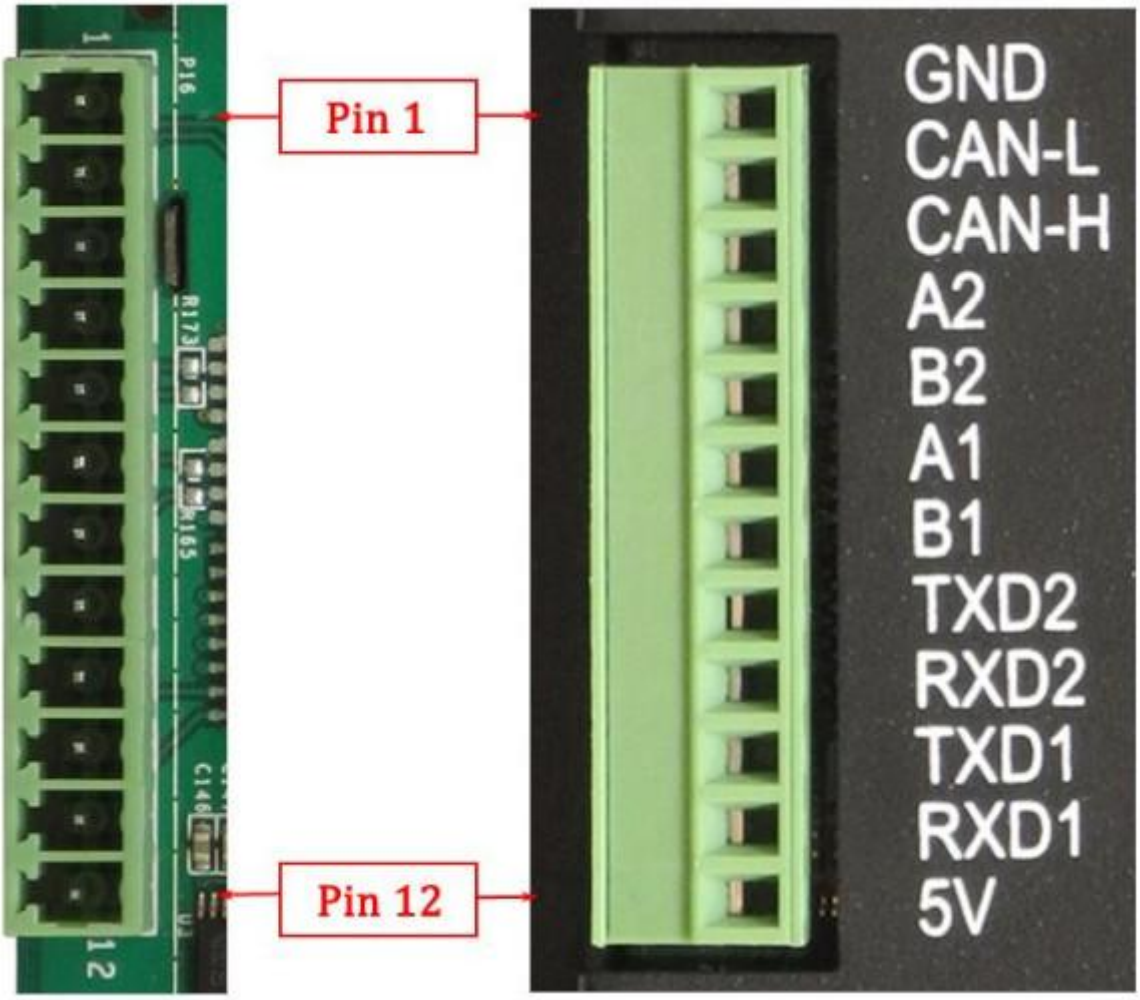

Figure 756: *Relation between serial pins on embedded vs. enclosed version of the* EPC/PPC-A8-097-C *Industrial PC*

The table below offers more detailed description of every pin and its definition:

RS232 / RS485 / CAN Pin Definition:		
Pin Number	**Definition**	**Description**
Pin 12	+5V	Isolated +5V Power Output, No more than 200mA Current output

RS232 / RS485 / CAN Pin Definition:		
Pin 11	RXD1	UART0 of CPU, RS232 RXD Signal
Pin 10	TXD1	UART0 of CPU, RS232 TXD Signal
Pin 9	RXD2	UART1 of CPU, RS232 RXD Signal
Pin 8	TXD2	UART1 of CPU, RS232 TXD Signal
Pin 7	B1	UART2 of CPU, RS485 B Signal
Pin 6	A1	UART2 of CPU, RS485 A Signal
Pin 5	B2	UART4 of CPU, RS485 B Signal
Pin 4	A2	UART4 of CPU, RS485 A Signal
Pin 3	CAN_H	DCAN0 of CPU, CAN H Signal
Pin 2	CAN_L	DCAN0 of CPU, CAN L Signal
Pin 1	GND	Isolated Ground Output

Table 275 Connectivity Section

USB Connectors

There are 4 x Type A **USB HOST connectors** onboard, as shown on the figure below.

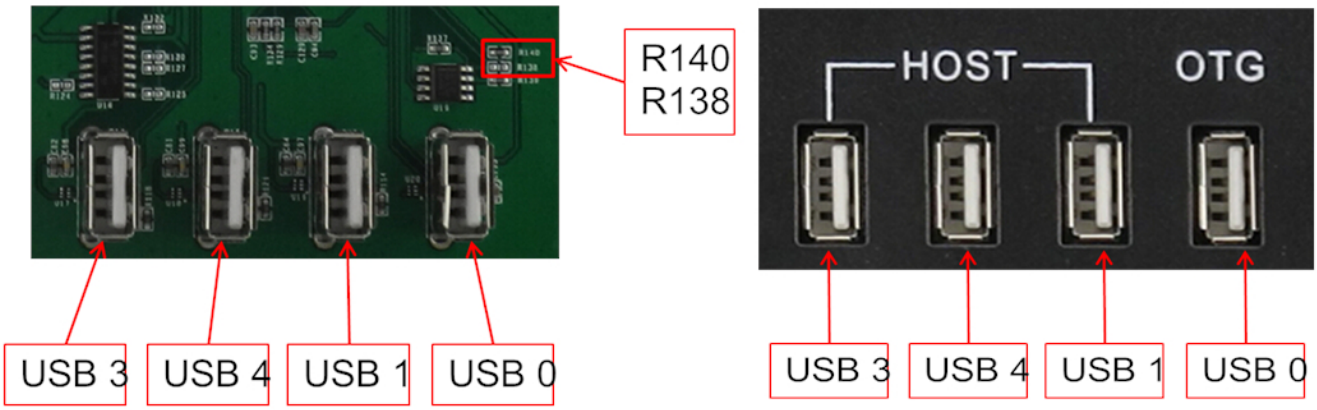

Figure 757: *USB HOST Connectors (embedded/enclosed PC version)*

Note

The USB Connectors are defined as HOST by default. If customer needs it work as OTG (slave), please solder a 0Ω 0603 Package Resistor to **R140** and **R138**.

Warning

Be careful not to touch surrounding electronic components accidentally while plugging in USB devices into the embedded Industrial PC version.

LAN Connectors

LAN (RJ45) connector provides Ethernet connectivity over standardized Ethernet cables as shown the figure below. The integrated Ethernet interface supports up to 1 Gbps data throughput.

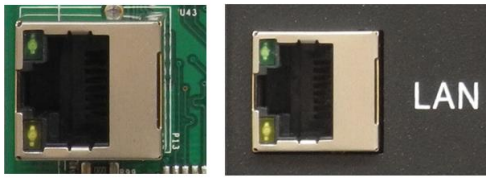

Figure 758: *RJ45 LAN Connectors (embedded/enclosed PC version)*

> **Note**
>
> Use CAT5 or better cables to achieve full data throughput over maximum distance defined by the 1000BASE-T standard (100m).

WiFi & BT Module

The EPC/PPC-A8-097-C Industrial PC is equipped with the popular **Realtek RTL8723 WiFi/BT module** that supports BT/BLE 4.0 (with backward compatibility), as well as 802.11bgn 2.4 GHz Wireless LAN (WLAN).

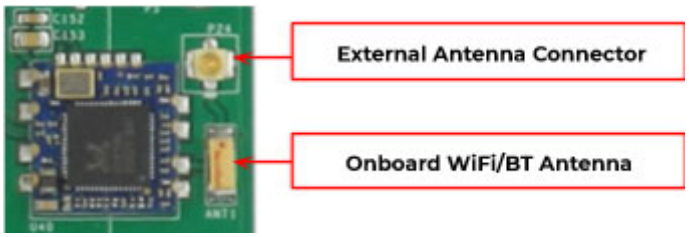

Figure 759: *RTL8273 WiFi/BT Module*

The enclosed (PPC) variant of the product also includes an SMA connector for an external WiFi/BT antenna, as illustrated in the figure below.

Figure 760: *WiFi+BT Antenna*

Note

1. The product does not come shipped with the WiFi/BT module by default.
2. If the operator mounts the WiFi/BT module on the EPC/PPC-A8-097-C industrial PC, the module uses the USB1 channel to communicate with CPU, so it will occupy the USB1 channel.

3G/4G/LTE Module

The EPC/PPC-A8-097-C Industrial PC is equipped with a **mini-PCIe connector** that can connect to a 3G/4G/LTE module. The customer will also need a SIM Card Holder and a 3G/4G/LTE Antenna Connector to ensure 3G/4G/LTE works on the EPC/PPC-A8-097-C.

Figure 761: *3G/4G/LTE Module*

Figure 762: *SIM Card Holder and 3G/4G/LTE Antenna Connector*

Attention

1. The product does not come shipped with the 3G/4G module by default.

GPIO Port

The EPC/PPC-A8-097-C Industrial PC has a 10 Pin 3.81mm **GPIO Connector**, as shown on the figure below, that is labeled as P18 on the PCB. The table below gives details about the definition of every Pin.

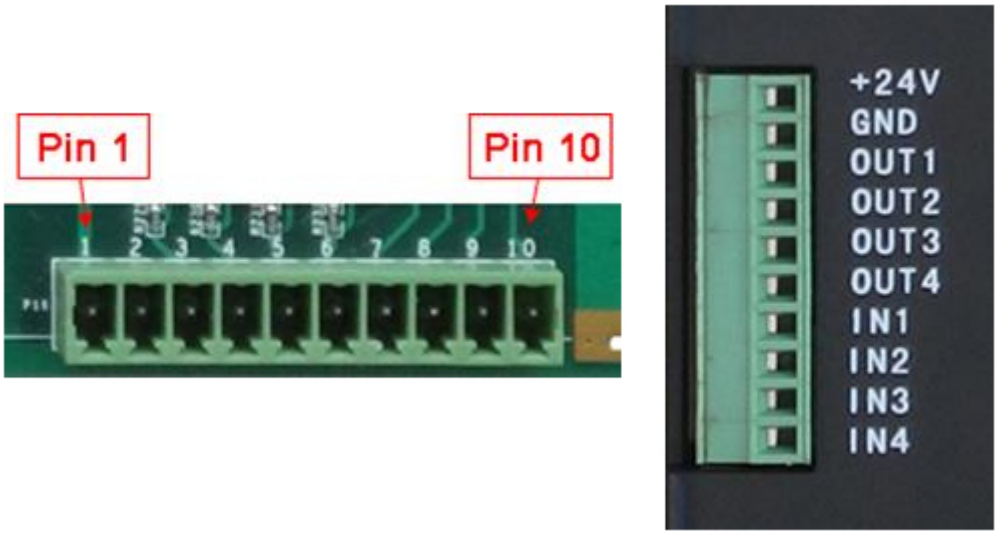

Figure 763: *GPIO Connector*

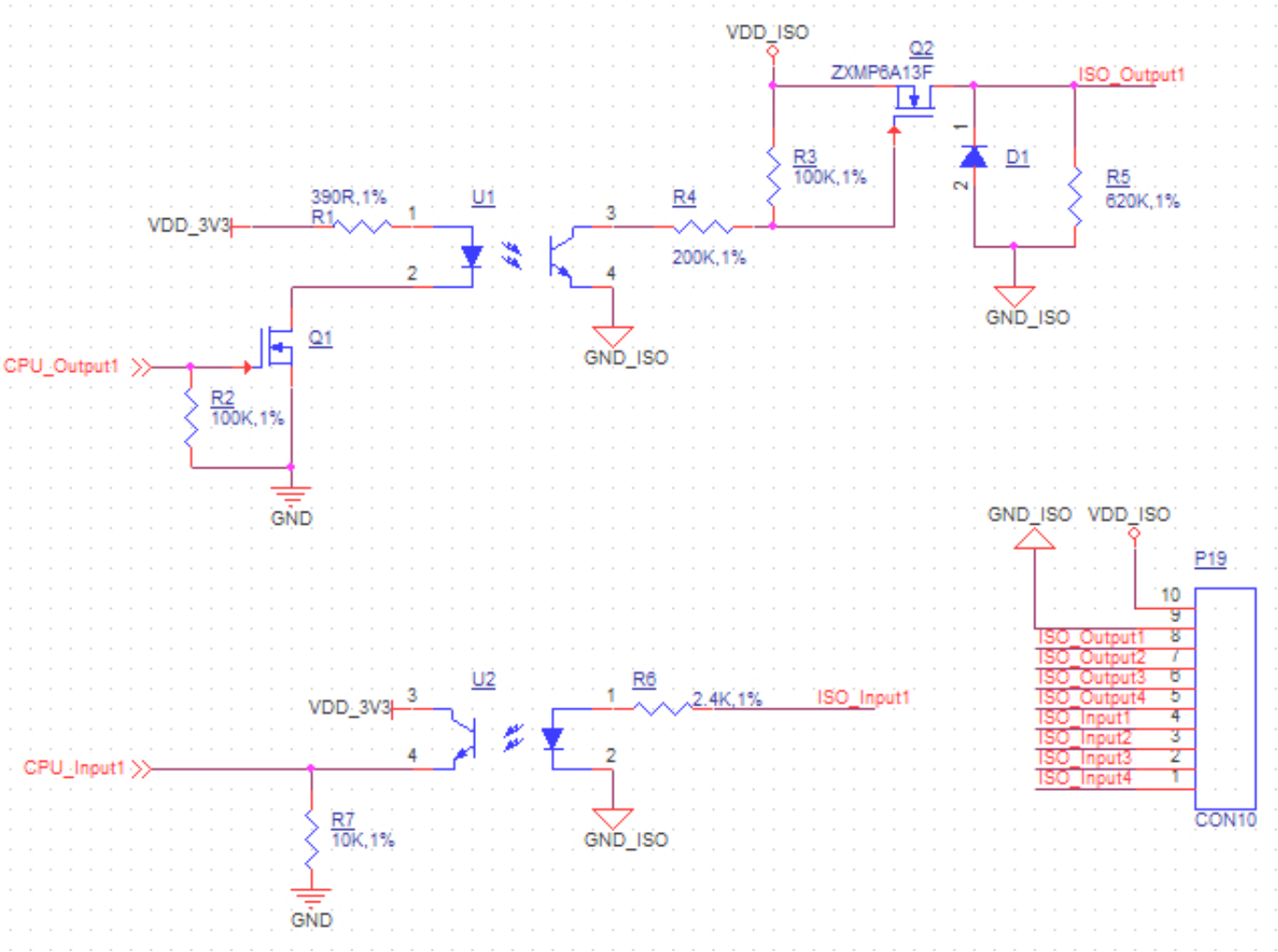

Isolated GPIO reduced schematic

GPIO Connector Pin Definition:		
Pin Number	**Definition**	**Description**
Pin 1	VCC	Isolated Power +5V Output
Pin 2	GND	Isolated Ground
Pin 3	OUT1	Isolated Output 1
Pin 4	OUT2	Isolated Output 2
Pin 5	OUT3	Isolated Output 3
Pin 6	OUT4	Isolated Output 4
Pin 7	IN1	Isolated Input 1
Pin 8	IN2	Isolated Input 2
Pin 9	IN3	Isolated Input 3
Pin 10	IN4	Isolated Input 4

Table 276 GPIO Connector Pin-out

Attention

- The GPIO has been Opt-Isolated and it uses the 24V Logic by default. The GPIO is driven by the on board VDD, you do not need an external isolated power input.
- The 4 output channels can drive at most 500mA current on each channel.
- The operator can use the power input that connects to Power Input Connector, if the operator doesn't want to use an isolated power input.
- Also, you can use the 5V voltage on-board as power input. The operator must solder a 0Ω resistor on R292 & R293 then you can connect the 5V voltage onboard to the **Isolated Power Input** Pin.

TF Card Slot

The EPC/PPC-A8-097-C Industrial PC features 1 x **TF Card (micro SD) slot**. It can address up to 32GB of memory.

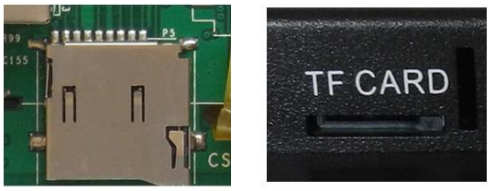

Figure 764: *TF (micro SD) Card Slot*

Note

The product does not come shipped with the TF Card by default.

Audio Connectors

The EPC/PPC-A8-097-C Industrial PC features some audio peripherals, as well. It has 1 x **3.5mm audio input jack** and 1 x **3.5mm audio output jack**.

On the embedded panel PC version, the pink connector is the audio input jack (line-in) and the blue connector is the audio output jack (line-out, typically around -10 dBV). On the enclosed panel PC version, both audio input and audio output are clearly marked on the figure below.

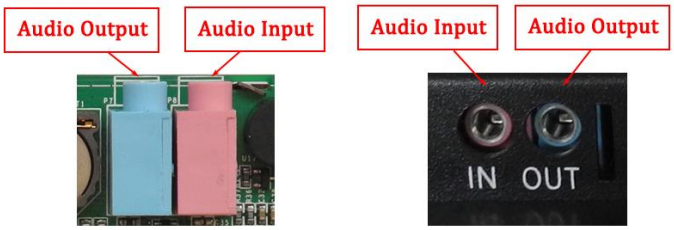

Figure 765: *Audio I/O (embedded/enclosed PC version)*

In addition, EPC/PPC-A8-097-C features a miniature 2W embedded speaker for audio reproduction, as well as a small buzzer for alarm/notification sounds.

Figure 766: *2W Micro Speaker and Buzzer*

Boot DIP Switch

The EPC/PPC-A8-097-C Industrial PC supports boot from SD card. If you want to reflash the Operating System (OS), you can use the TF card for that purpose, combined with the **DIP switch** settings as illustrated in the figure below.

There is no need to alter the DIP switch settings during regular operation. However, if you need to reinstall the OS, please refer to the table below. Detailed information on how to re-flash the OS can be found in the Software Documentation.

Figure 767: *Boot DIP Switch*

Boot Config Select				
DIP SW	**1**	**2**	**3**	**4**
SD	1	0	0	0
eMMC	1	1	0	1
Download	0	1	1	0

Table 277 Boot Configuration Selection

Mounting Procedure

The EPC/PPC-A8-097-C Industrial PC can be mounted with 8 x M4 screws, enabling simplified installation onto any standard mounting fixture. Other mounting options might also be supported according to the table in the Hardware Features section.

You can find detailed information about mounting in the Mount IPC Guide.

Mechanical Specifications

EPC-A8-097-C

The outer mechanical dimensions of EPC-A8-097-C are 226 x 172 x 28mm (W x L x H). Please refer to the technical drawing in the figure below for details related to the specific product measurements.

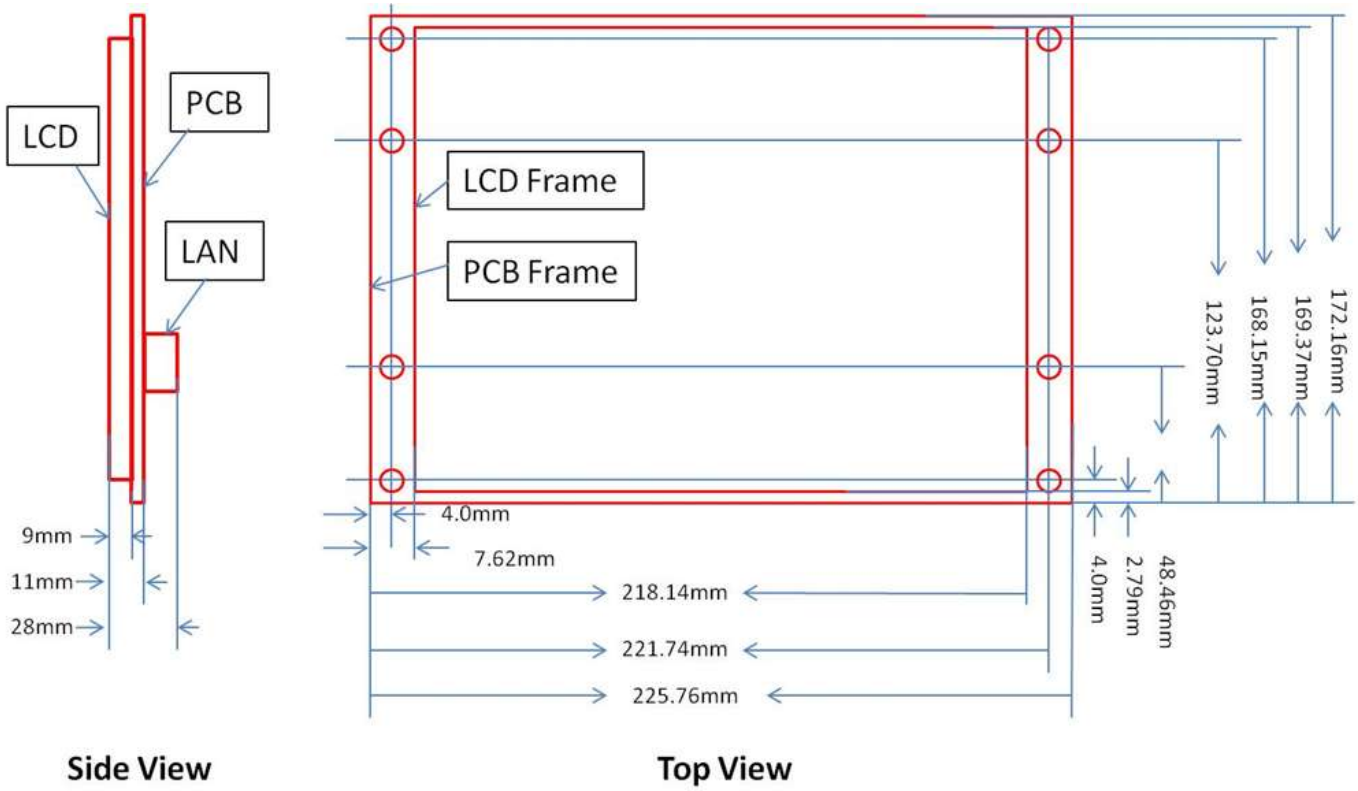

Figure 768: EPC-A8-097-C *Technical Drawing*

PPC-A8-097-C

For PPC-A8-097-C, the outer mechanical dimensions are 252 x 205 x 33mm (W x L x H).

Panel Mounting

Figure 769: *Fixing* PPC-A8-097-C *industrial PC into panel*

Note

With the PPC-A8-097-C industrial PC, the operator can fix the PC into the panel by pushing it from the front inside the panel as described in the figure above. The recommended maximum thickness of the panel material is 8mm.

1. Make sure the Panel PC is configured correctly. The Boot Switch is sitting inside the housing. To use it, the Panel PC has to be unmounted from the panel.
2. Push the Panel PC straight into the Panel Hole until the unit sits flat on the panel as shown in the figure above.
3. Use the mounting fixtures to lock the Panel PC into it's place.

Disclaimer

This document is provided strictly for informational purposes. Its contents are subject to change without notice. Chipsee assumes no responsibility for any errors that may occur in this document. Furthermore, Chipsee reserves the right to alter the hardware, software, and/or specifications set forth herein at any time without prior notice and undertakes no obligation to update the information contained in this document.

While every effort has been made to ensure the accuracy of the information contained herein, this document is not guaranteed to be error-free. Further, it does not offer any warranties or conditions, whether expressed orally or implied in law, including implied warranties and conditions of merchantability or fitness for a particular purpose. We specifically disclaim any liability with respect to this document, and no contractual obligations are formed either directly or indirectly by this document.

Despite our best efforts to maintain the accuracy of the information in this document, we assume no responsibility for errors or omissions, nor for damages resulting from the use of the information herein. Please note that Chipsee products are not authorized for use as critical components in life support devices or systems.

Technical Support

If you encounter any difficulties or have questions related to this document, we encourage you to refer to our other documentation for potential solutions. If you cannot find the solution you're looking for, feel free to contact us. Please email Chipsee Technical Support at **support@chipsee.com**, providing all relevant information. We value your queries and suggestions and are committed to providing you with the assistance you require.