Industrial PC

CS-RK3576-BOX

PN: CS-RK3576-BOX

Content can change at anytime, check our website for latest information of this product.
www.chipsee.com

Contents

CS-RK3576-BOX 3

1. Product Overview 7

2. Ordering Options 8

2.1. Operating System 8

2.2. Optional Features 9

3. Hardware Features 10

4. Power Input 12

4.1. Ignition Signal 14

5. Connectivity 15

5.1. RS232+RS485+CAN 15

5.2. GPIO 17

5.3. USB Connectors 20

5.4. LAN Connector 22

5.5. WiFi & BlueTooth Module 23

5.6. 4G/LTE Module 25

6. M.2 Slot 27

7. TF Card Slot 28

8. Audio Connectors 29

9. HDMI Connector 30

10. PROG Button 31

11. Mounting Procedure 32

12. Mechanical Specifications 34

13. Disclaimer 34

14. Technical Support 35

CS-RK3576-BOX

Front View

Rear View

Chipsee
PN:CS-RK3576-BOX
OS:Debian 12
SN:2026010916000002
https://chipsee.com
Origin:Made in China

Side View 1

WIFI
Audio
HDMI-D
Type-C
TF
SIM
USB HOST
LAN1
LAN0
PROG
DC:9-30V
4G

Side View 2

CAN1-H
CAN1-L
CAN0-H
CAN0-L
RS485_5-
RS485_5+
RS485_4+
RS485_4-
RS485_3-
RS485_3+
RS232_0_RXD
RS232_0_TXD
RS232_2_RXD
RS232_2_TXD
GND
+5V
VDD_ISO
GND_ISO
OUT1
OUT2
OUT3
OUT4
IN1
IN2
IN3
IN4
DC: 9~30V
+ - G

Product Overview

The Cortex®-A72+ Cortex®-A53 series CS-RK3576-BOX (PN: CS-RK3576-BOX) is a high-quality IP65-compliant industrial box PC.

Key Applications

- Process Control
- Process Monitoring
- IIoT node
- Environmental Monitoring
- PLC
- Automotive applications
- ATM...

The CS-RK3576-BOX Industrial Box PC is based around the powerful RK3576 System on Chip (SoC), powered by the Rockchip RK3576 low-power processor which integrates a Quad-core Cortex-A72(1.6GHz) + Quad-core Cortex-A53(1.4GHz) processor, and a 6 TOPS(Sparsity)@INT8 computing power NPU (neural processing unit).

The RK3576 supports multi-format video decoders and has a high-performance 4GB LPDDR5 RAM capable of sustaining demanding memory bandwidth. It also provides a complete set of peripheral interfaces.

Ordering Options

Chipsee products can be customized during the ordering process. The product will be shipped with the pre-installed factory defaults if no extra requirements are specified. The table in the Hardware Features section provides information about the default options bundled with the product.

> **Note**
>
> You can order the CS-RK3576-BOX from the official Chipsee Store or from your nearest distributor.

Operating System

This product comes with a pre-installed OS of your choice. Please see the list below for the supported OSes, which can also be obtained from the Software Documentation section, along with the detailed installation instructions.

- Android 14
- Debian 12
- Buildroot Linux Qt 5.15

> **Warning**
>
> The Software Documentation section provides a detailed instruction on how to install different OSes on your own. However, bear in mind that Chipsee can't take the responsibility of inadequate installation procedure. If you "brick" your device, please contact Chipsee Technical Support at **support@chipsee.com** for further assistance

Optional Features

The CS-RK3576-BOX Industrial Box PC does not include 4G/LTE module by default. The module is optional and can be selected at the Chipsee store during the ordering process.

The CS-RK3576-BOX Industrial Box PC does not include M.2 NVMe SSD module by default. The module is optional and can be selected at the Chipsee store during the ordering process.

The CS-RK3576-BOX Industrial Box PC does not support PoE.

Warning

Installation, repair, and maintenance tasks should be performed by trained personnel only. Chipsee does not bear any responsibility for damage caused by inadequate handling of the product.

Hardware Features

The CS-RK3576-BOX Industrial Box PC offers a broad range of performance and connectivity options for scalable integration, providing expandability according to future needs. Some of the key features are listed in the table below.

CS-RK3576-BOX	
CPU	Rockchip RK3576J, Quad-core Cortex-A72 (1.6GHz) + Quad-core Cortex-A53 (1.4GHz)
RAM	4GB LPDDR5
NPU	6 TOPS(Sparsity)@INT8
eMMC	64GB
Storage	TF Card, Supports up to 128GB SDHC
PCIe	Optional, supports M.2 M-Key 2230/2240 (PCI-E 3.0 x1) module (**4G/LTE Mini PCIe cannot be used with M.2 PCIe at the same time**)
Display	N/A
Touch	N/A
HDMI	1 x HDMI-D (Micro-HDMI) Out
USB	1 x USB 2.0 HOST, 1 x USB 3.0 HOST, 1 x USB Type-C (USB3.0 port and USB-C port cannot be used at the same time)
LAN	2 x RJ45, GbE
POE	N/A
Audio	3.5mm Audio In/Out Connector, 2W Internal Speaker
Buzzer	Yes
RTC	High accuracy RTC with farad capacitor, can work 1 week after power off **(default)**. High accuracy RTC with lithium coin battery, can work 3 years after power off *(optional)*.
RS232	Default to 2 x RS232 (including 1 debug port). Up to 6 x RS232 by swapping 3 x RS485 + CAN1 to 4 x RS232.1
RS485	Default to 3 x RS485. Optionally, these 3 x RS485 can be configured to RS232.1
CAN	Default to 2 x CAN FD. Optionally, 1 x CAN(CAN1) can be configured to RS232.
GPIO	8 Channels Isolated IO, 4 x Input and 4 x Output
WiFi/BT	Integrated WiFi/Bluetooth Module
4G/LTE	Supported, Optional (**4G/LTE Mini PCIe cannot be used with M.2 PCIe at the same time**)
Power Input	From 9V to 30V (supports optional 24V ignition signal)
Current	400mA (max) at 15V

CS-RK3576-BOX	
Power Consumption	6W (max)
Working Temperature	From -40°C to +85°C
OS	Android 14, Debian12, Buildroot Linux Qt 5.15
Dimensions	CS-RK3576-BOX (PN: CS-RK3576-BOX): 209 x 125 x 37.3mm
Weight	CS-RK3576-BOX (PN: CS-RK3576-BOX): 900g
Mounting	CS-RK3576-BOX (PN: CS-RK3576-BOX): Rear, VESA

Key Features

1(1,2) This product has 5 x UART by default, 6 x UART channels at most. The default configuration is 2 x RS232 and 3 x RS485, including 1 RS232 debug port. The 3 x RS485 + CAN1 can be configured to 4 x RS232. UART can be swapped between RS232 and RS485 modes easily, if you need a different RS232/RS485 configuration, please get in touch with the Chipsee Technical Support at **support@chipsee.com**

Power Input

The CS-RK3576-BOX Industrial Box PC can be powered by a wide range of input voltages: From 9V to 30V (supports optional 24V ignition signal) DC.

There are two DC input interfaces on this device: a **3-pin, 3.81mm screw terminal** connector, and a **2.1mm DC input head**. As shown in the figure below.

Power Input

Note that the "**+**" sign represents the positive power input. The "**-**" terminal is shorted to the ground.

Power Input Definition		
Pin Number	**Definition**	**Description**
Pin 1	Positive Input	DC Power **Positive Terminal**
Pin 2	Negative Input	DC Power **Negative Terminal**
Pin 3	Ground	**Power System Ground**

Power Connector

> **Note**
>
> The system ground "**G**" is connected to power negative "**-**" on board.

For a proper 2.1mm x 5.5mm x 9.5mm DC power connector, refer to the figure below:

DC Jack

Ignition Signal

The product has a “ignition signal” **optional** feature. By default the ignition signal is not installed. If you need this feature you can contact us when placing an order. In this setup, Pin 3 is the ignition signal pin.

The DC jack doesn’t support ignition signal.

To use this feature, apply a 24V DC input (relative to -) to Pin 3. If Pin 3 detects a low input voltage, the product will be shutdown. If Pin 3 detects a high input voltage, the product will be boot and running.

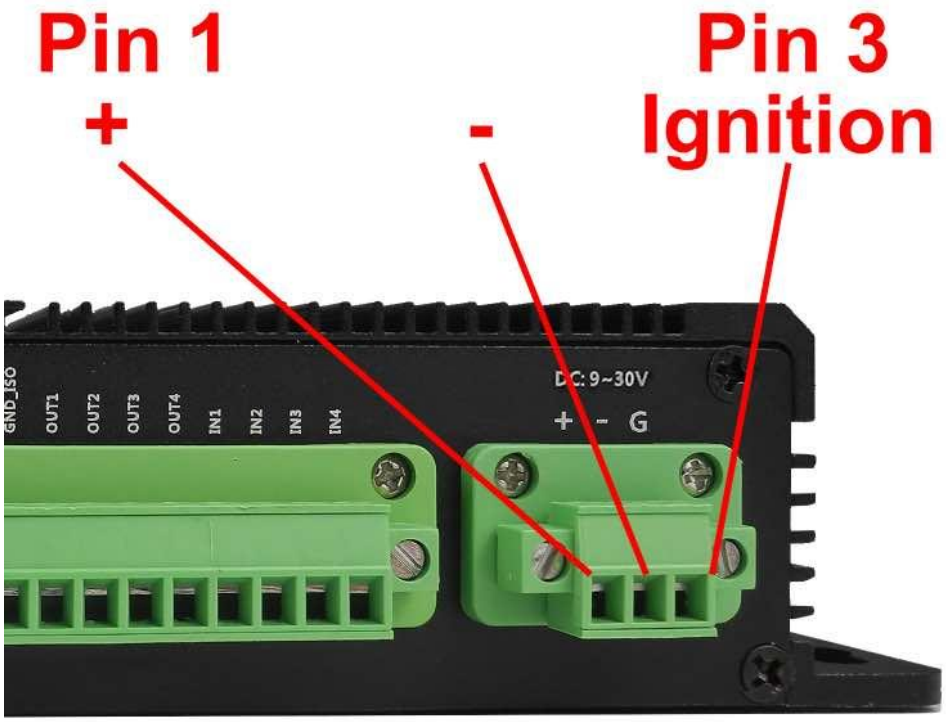

Power Input (with Ignition Signal)

Power Input Definition		
Pin Number	**Definition**	**Description**
Pin 1	Positive Input	DC Power **Positive Terminal**
Pin 2	Negative Input	DC Power **Negative Terminal**
Pin 3	Ignition	**Ignition Signal**

Power Connector with Ignition Signal

Connectivity

There are many connectivity options available on the CS-RK3576-BOX industrial PC. It has 1 x USB 2.0 HOST, 1 x USB 3.0 HOST, 1 x USB Type-C, 2 x network connectors (RJ45) supporting up to 1 Gbps, 2 x CAN FD and 5 x UART terminals (RS232/485).

RS232+RS485+CAN

The serial communication interfaces (RS485, RS232, and CAN FD) are routed to a **16-pin 3.81mm terminal**, as illustrated in the figure below. Serial communication on both RS485 and RS232 interfaces can reach up to 115200 kbps.

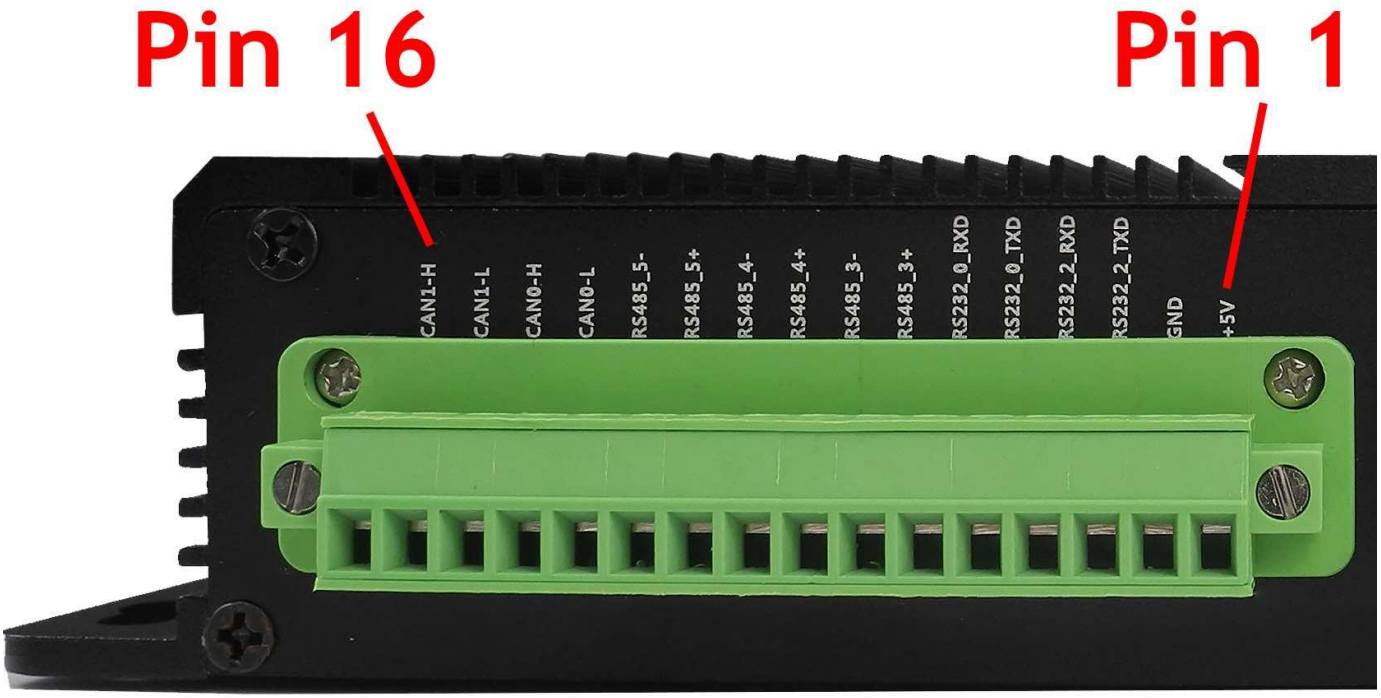

Attention

- The 120Ω match resistor for **CAN** bus is **NOT mounted** by default.
- The 120Ω match resistor for **RS485** is **already mounted** by default.
- This product supports changing 3 x RS485 to 3 x RS232, supports changing 1 x CAN(CAN1) to 1 x RS232, providing up to 6 x RS232 (including one debug port).

The table below offers a detailed description of every pin:

RS232 / RS485 / CAN Pin Definition:			
Pin Number	**Definition**	**Description**	**OS Node**
Pin 16	CAN1_H	CPU CAN1_M3, CAN BUS “H” signal	CAN1

RS232 / RS485 / CAN Pin Definition:			
Pin 15	CAN1_L	CPU CAN1_M3, CAN BUS “L” signal	
Pin 14	CAN0_H	CPU CAN0_M2, CAN BUS “H” signal	CAN0
Pin 13	CAN0_L	CPU CAN0_M2, CAN BUS “L” signal	
Pin 12	RS485_5-	CPU UART7, RS485 –(B) signal	/dev/ttyS7
Pin 11	RS485_5+	CPU UART7, RS485 +(A) signal	
Pin 10	RS485_4-	CPU UART5, RS485 –(B) signal	/dev/ttyS5
Pin 9	RS485_4+	CPU UART5, RS485 +(A) signal	
Pin 8	RS485_3-	CPU UART3, RS485 –(B) signal	/dev/ttyS3
Pin 7	RS485_3+	CPU UART3, RS485 +(A) signal	
Pin 6	RS232_0_RXD	CPU UART2, RS232 RXD signal	/dev/ttyS2
Pin 5	RS232_0_TXD	CPU UART2, RS232 TXD signal	
Pin 4	RS232_2_RXD	CPU UART0, RS232 RXD signal, Debug Port	/dev/ ttyFIQ
Pin 3	RS232_2_TXD	CPU UART0, RS232 TXD signal, Debug Port	
Pin 2	GND	System Ground	
Pin 1	+5V	System +5V Power Output, No more than 1A Current output	

RS232 / RS485 / CAN Pin Definition for 7 inch/Box products

GPIO

The CS-RK3576-BOX Industrial Box PC features a 10 Pin 3.81mm connector that provides 8 x opto-isolated GPIO pins, of which 4 x are output, and 4 x are input pins.

The GPIO **HIGH** output level corresponds to the voltage connected at the isolated Power Input, while the GPIO **LOW** output level corresponds to the isolated Ground Input.

The GPIO uses the 24V logic by default. You can use an external isolated power input but the power input range should be from 5V to 24V DC.

Attention

1. In order to use the Isolated Output, you need to add an external Isolated Power to the VDD_ISO and GND_ISO. The power voltage should not exceed 24V.
2. The output current can supply 500mA for every channel, but it also depends on the isolated power that is connected.
3. In order to use the Isolated Input, you need to add a signal to the InputX and GND_ISO. A 2.4KΩ resistor has been added to limit the input current, as shown in the figure below. This resistor should work well for the 5-24V input signal. If your input signal is less than 5V, please change this input resistor. The reduced schematic is for reference purpose, if you need the precise resistor schematic, please contact us.
4. If the isolation is not a requirement, it is possible to use a non-isolated PSU instead. It is also possible to use the onboard 5V power supply: it can be re-routed to the *Isolated Power Input* pin by populating two PCB resistor footprints with 0Ω resistors. In this case, the *Isolated Power Input* pin will become an output for the onboard 5V power supply.

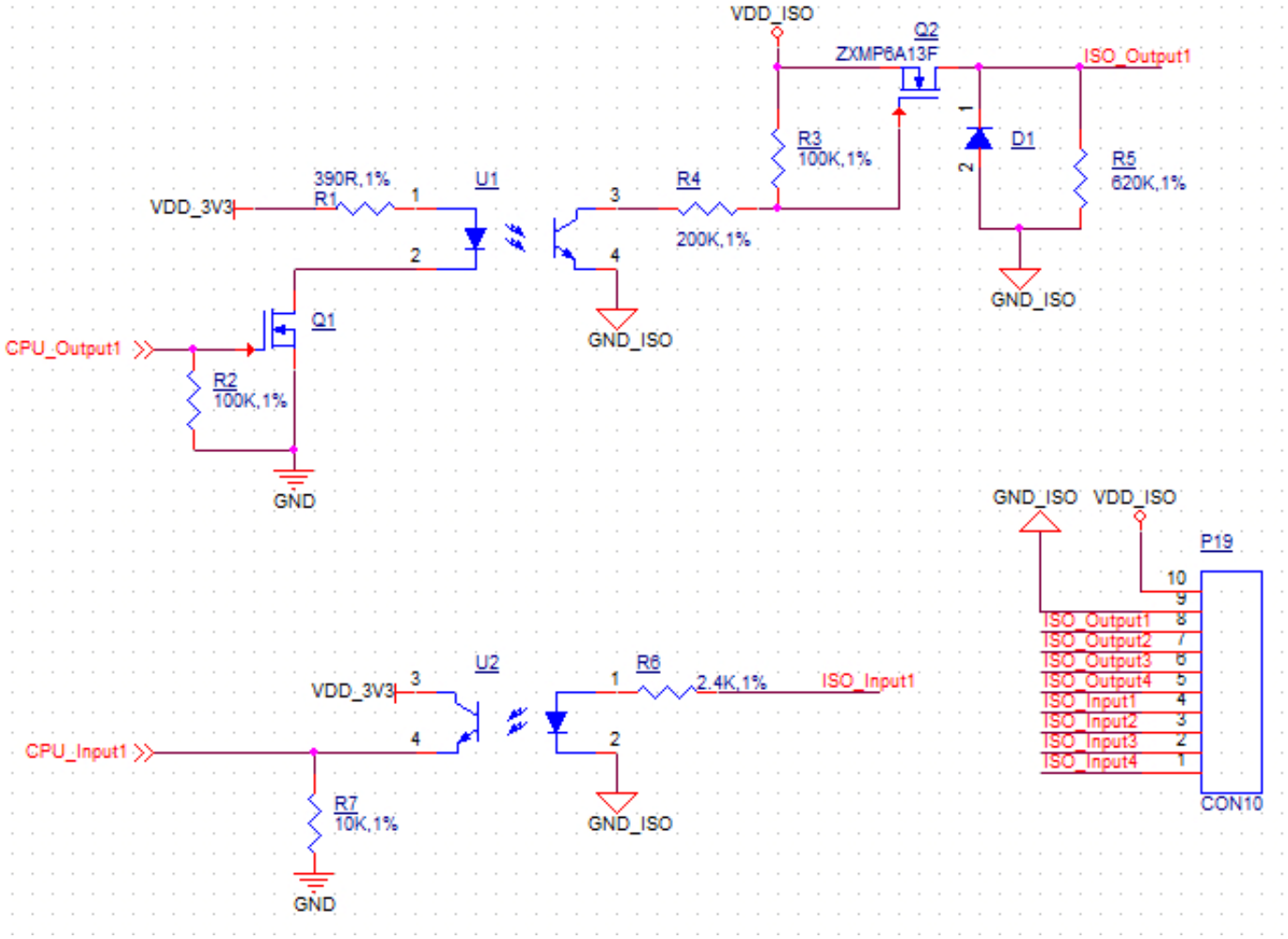

Isolated GPIO reduced schematic

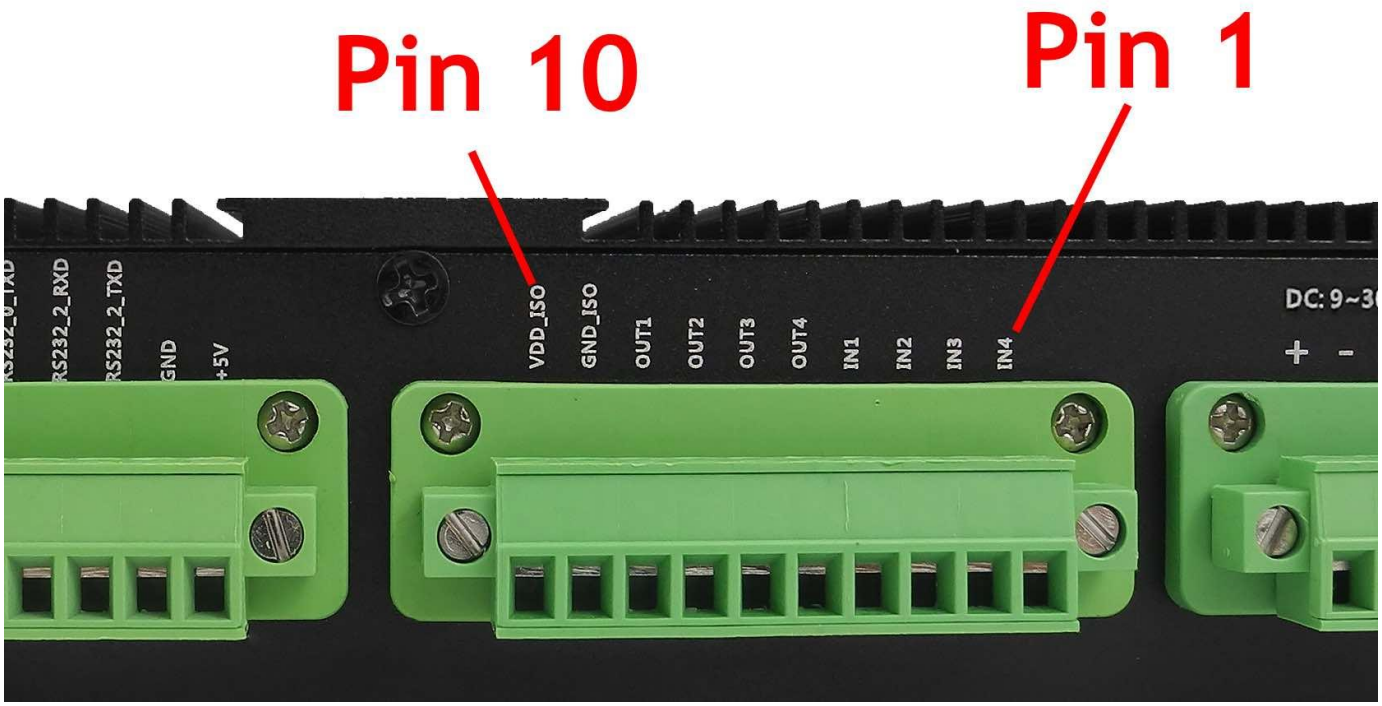

GPIO Terminal

Pin Number	Definition	GPIOD Chip	GPIOD Line	SYSFS
Pin 1	IN4	3	15	111
Pin 2	IN3	3	16	112
Pin 3	IN2	3	21	117
Pin 4	IN1	3	22	128
Pin 5	OUT4	0	2	2
Pin 6	OUT3	3	28	124
Pin 7	OUT2	2	6	70
Pin 8	OUT1	2	7	71
Pin 9	GND_ISO			
Pin 10	VDD_24V			

GPIO Connector Pin-out

USB Connectors

There are 2 x **USB HOST** and 1 x **USB DEVICE** (for flashing OS) ports onboard: 1 x USB 2.0 HOST, 1 x USB 3.0 HOST, 1 x USB Type-C, as shown in the figures below.

> **Warning**
>
> **Please unplug USB mouse/keyboard** from the USB3.0 port when flashing OS.

The USB3.0 type-A host and USB-C **can't be used** at the same time. Before boot into OS, USB-C is enabled for installing OS image; after boot into OS, USB-A is enabled but USB-C is disabled.
In Android, these can be configured, USB3.0 type A is enabled by default, but you can switch to using USB-C in the software for debugging; in Linux, these can't be configured.

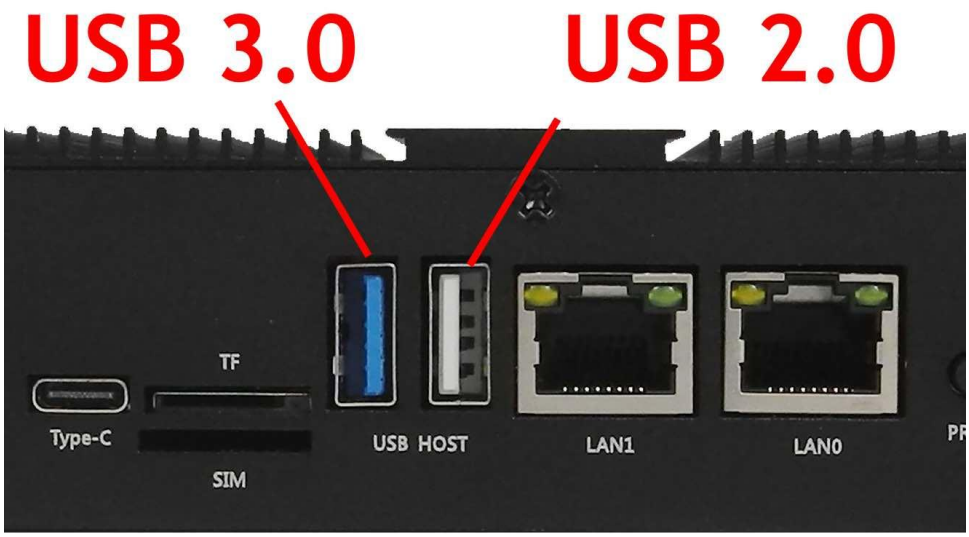

USB HOST Ports

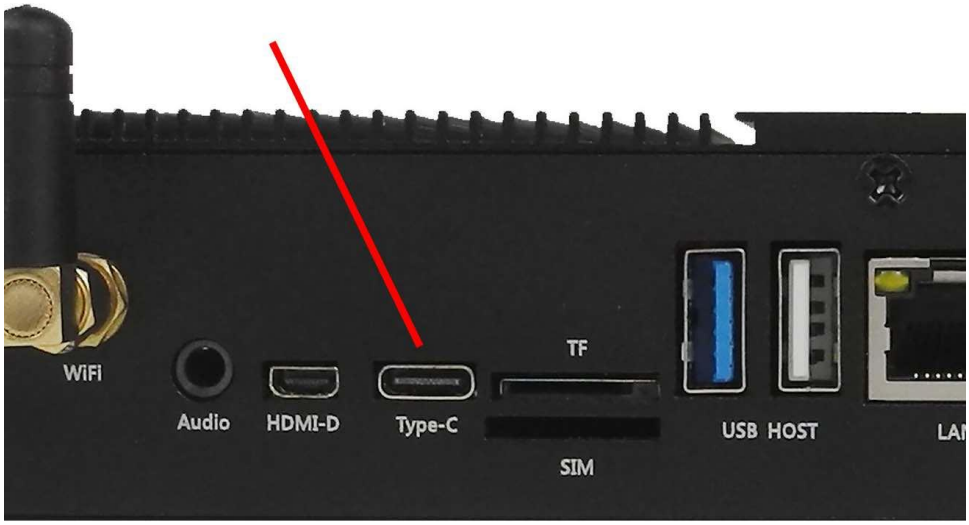

USB Type-C Port

LAN Connector

LAN (RJ45) connector provides 2 x RJ45 Ethernet connectivity over standardized Ethernet cables as shown in the figure below. The integrated Ethernet interface supports up to 1 Gbps data throughput.

This product does not support PoE(Power over Ethernet).

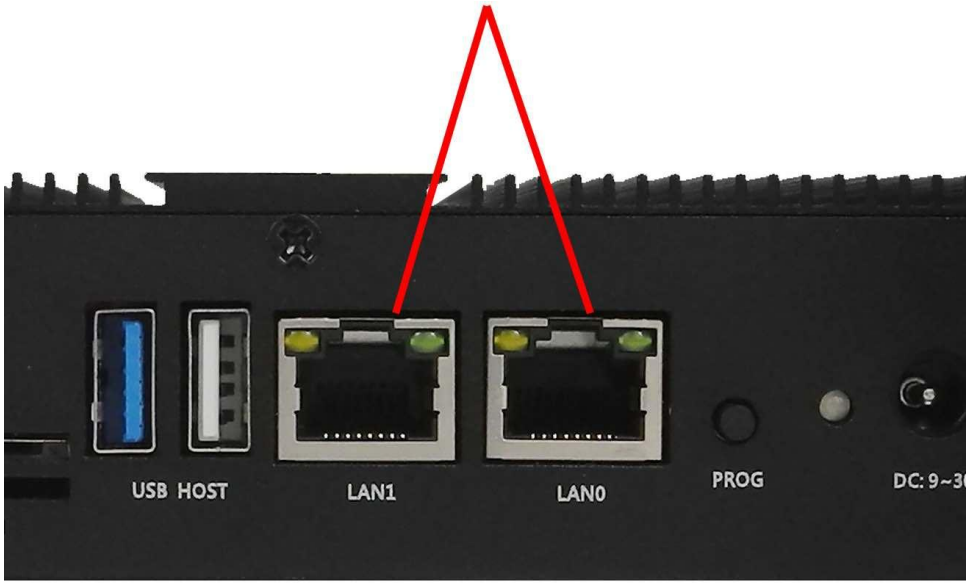

RJ45 LAN Connector

Note

Use CAT5 or better cables to achieve full data throughput over maximum distance defined by the 1000BASE-T standard (100m).

WiFi & BlueTooth Module

The CS-RK3576-BOX Industrial Box PC is equipped with the popular **Realtek RTL8821CS WiFi/BT module** which supports BT/BLE 2.1/3.0/4.2, as well as 802.11ac/abgn 433Mbps 2.4/5.8 GHz Wireless LAN (WLAN).

RTL8821CS WiFi/BT Module

The CS-RK3576-BOX includes an SMA connector for an external WiFi/BT antenna, as illustrated in the figure below.

WiFi+BT Antenna SMA

4G/LTE Module

The CS-RK3576-BOX Industrial Box PC is equipped with a mini-PCIe connector that can connect an optional 4G/LTE module. The customer will also need a SIM Card Holder and a 4G/LTE antenna connector to ensure 4G/LTE works.

SIM card does **NOT** support hot plug. **Power off** before inserting or removing SIM card.

4G/LTE Mini PCIe cannot be used with M.2 PCIe at the same time

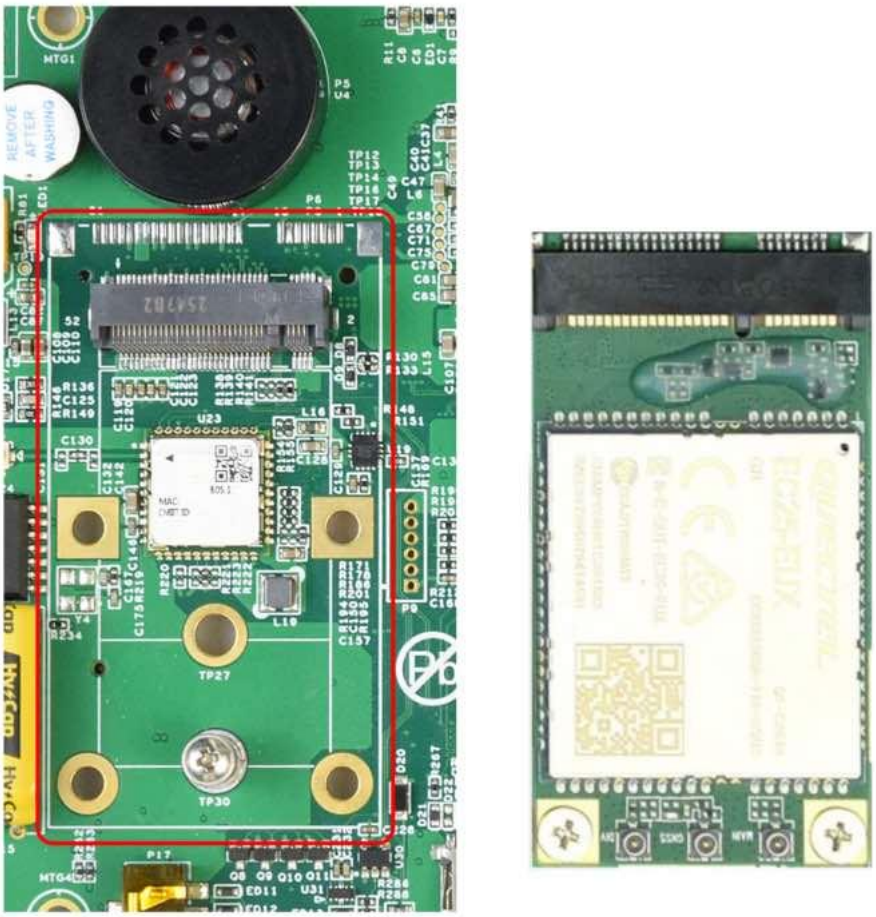

mini-PCIe Connector & 4G Module

4G/LTE Antenna

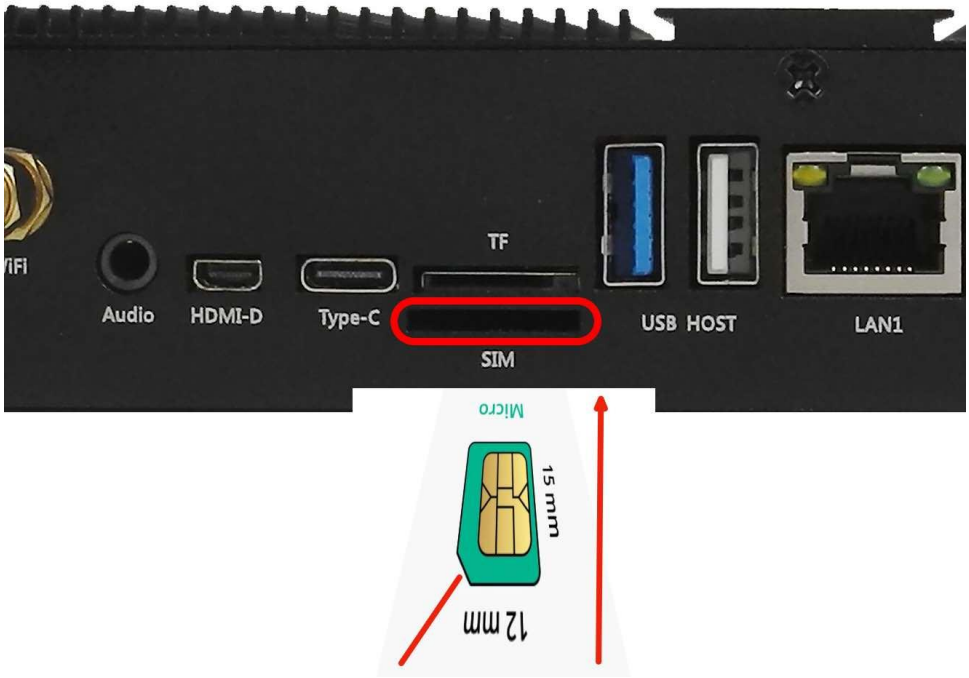

SIM Card Direction

Attention

The product does not come shipped with the 4G/LTE module by default. The customer can choose the 4G/LTE module option when placing an order, we will install all the necessary components.

M.2 Slot

There is an **optional** M.2 slot on the CS-RK3576-BOX that allows an optional SSD. The M.2 slot is capable of holding a M.2 M-Key 2230/2240 (PCI-E 3.0 x1) module. **4G/LTE Mini PCIe cannot be used with M.2 PCIe at the same time**.

The CS-RK3576-BOX does not come shipped with an SSD nor an M.2 slot by default. If you need the M.2 slot or M.2 devices please contact us before placing an order.

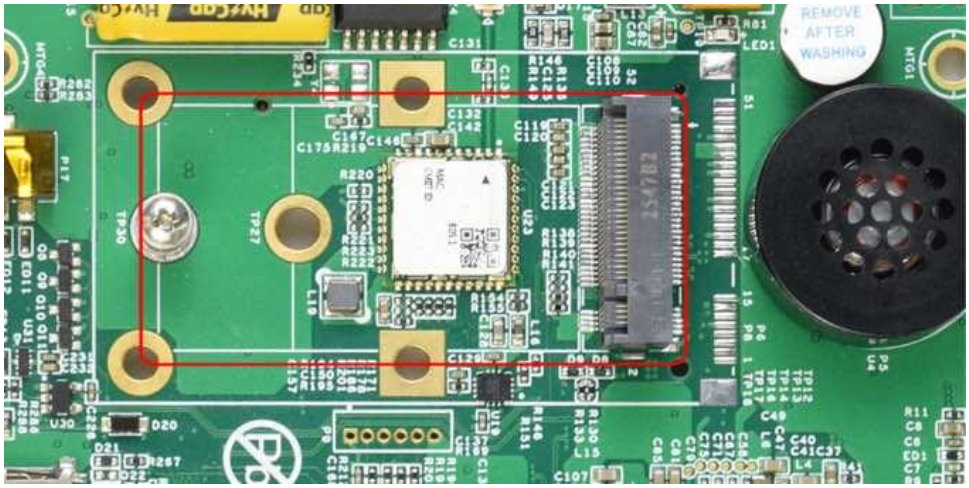

M.2 Slot (PCIe 3.0 x1)

TF Card Slot

The CS-RK3576-BOX Industrial Box PC features 1 x **TF Card (micro SD) slot**. TF Card can address up to 128GB of storage.

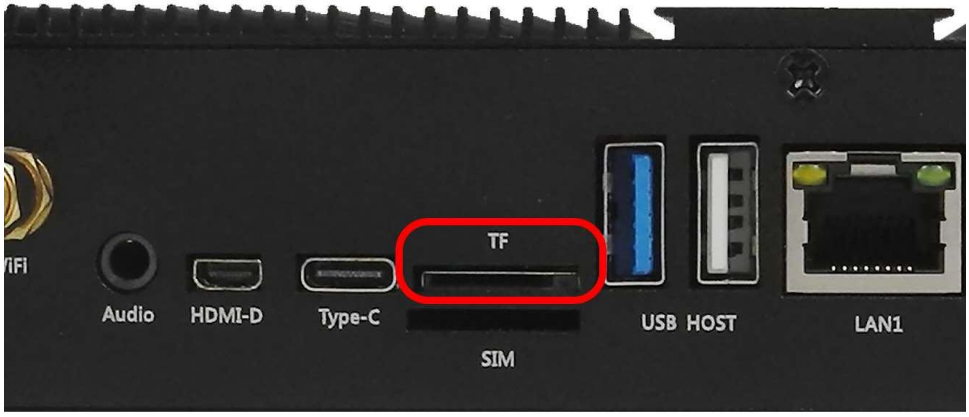

TF (micro SD) Card Slot

> **Note**
>
> The product does not come shipped with the TF Card by default.

Audio Connectors

The CS-RK3576-BOX Industrial Box PC features some audio peripherals. It has a **3.5mm audio input/output jack**, an **internal speaker**, as well as a small **buzzer**.

Audio Jack

The miniature 2W embedded speaker is handy for audio reproduction, the small buzzer can play alarm/notification sounds.

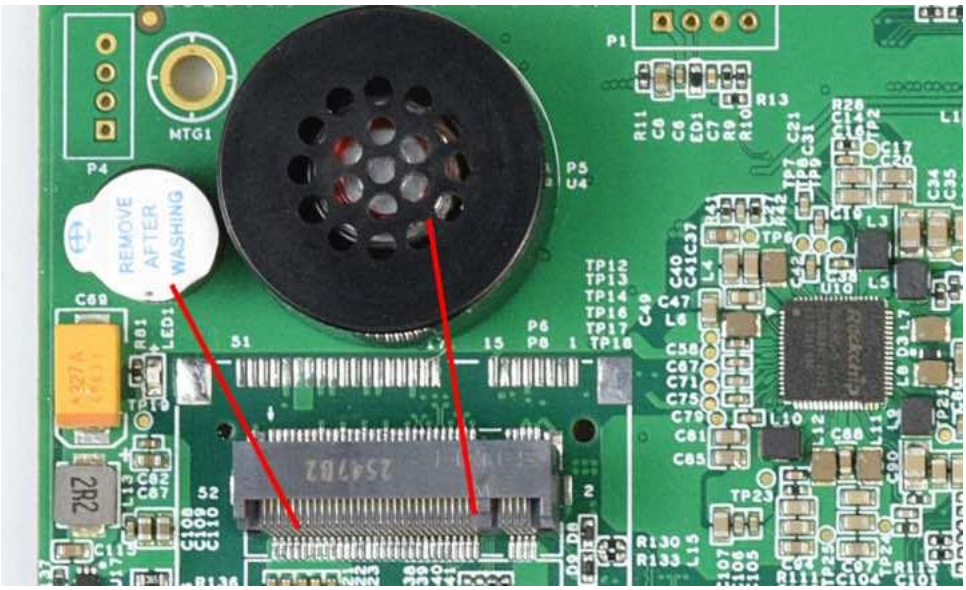

2W Micro Speaker and Buzzer

Attention

By plugging in the headphone cable, the internal speaker will be disabled automatically.

HDMI Connector

The CS-RK3576-BOX Industrial Box PC is equipped with 1 x HDMI-D (Micro-HDMI) Out port. The HDMI connector allows connecting an additional (external) monitor. HDMI output resolution can be configured by the software.

HDMI Connector

PROG Button

The CS-RK3576-BOX Industrial Box PC has one button on the board marked as PROG, as shown in the figure below.

When the button is pressed before powering up, the CS-RK3576-BOX will enter LOADER mode. In this mode you can use a USB Type-C cable to upgrade its operating system. You can use this feature to flash another OS to the internal eMMC.

When the button is not pressed before and during power up, the CS-RK3576-BOX will boot normally.

There is no need to press the button during regular operation. However, if you need to flash the OS in MASKROM mode, the button will be used. Please refer to the software documents for more information.

PROG Button

Mounting Procedure

You can mount CS-RK3576-BOX with VESA mounting (guide): **75 x 75** mm, 4 x **M4** (6mm) screws.

You can also mount CS-RK3576-BOX with rear mounting method (guide).

Mechanical Specifications

For CS-RK3576-BOX, the outer mechanical dimensions are 209 x 125 x 37.3mm (W x L x H).

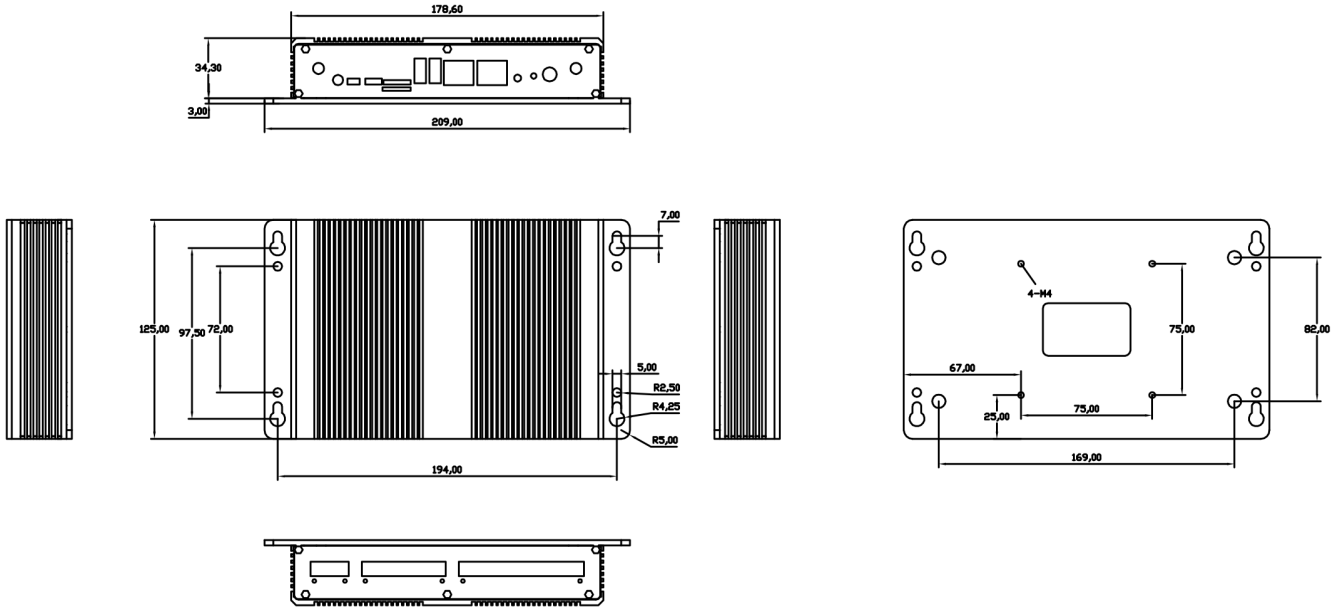

CS-RK3576-BOX *Technical Drawing*

Disclaimer

This document is provided strictly for informational purposes. Its contents are subject to change without notice. Chipsee assumes no responsibility for any errors that may occur in this document. Furthermore, Chipsee reserves the right to alter the hardware, software, and/or specifications set forth herein at any time without prior notice and undertakes no obligation to update the information contained in this document.

While every effort has been made to ensure the accuracy of the information contained herein, this document is not guaranteed to be error-free. Further, it does not offer any warranties or conditions, whether expressed orally or implied in law, including implied warranties and conditions of merchantability or fitness for a particular purpose. We specifically disclaim any liability with respect to this document, and no contractual obligations are formed either directly or indirectly by this document.

Despite our best efforts to maintain the accuracy of the information in this document, we assume no responsibility for errors or omissions, nor for damages resulting from the use of the information herein. Please note that Chipsee products are not authorized for use as critical components in life support devices or systems.

Technical Support

If you encounter any difficulties or have questions related to this document, we encourage you to refer to our other documentation for potential solutions. If you cannot find the solution you're looking for, feel free to contact us. Please email Chipsee Technical Support at **support@chipsee.com**, providing all relevant information. We value your queries and suggestions and are committed to providing you with the assistance you require.