Chipsee

Industrial PC

PPC-A76-070

PN: CS10600-RK3588-070P

Content can change at anytime, check our website for latest information of this product.
www.chipsee.com

Contents

PPC-A76-070 3

1. Product Overview 7

2. Ordering Options 8

2.1. Operating System 8

2.2. Optional Features 9

3. Hardware Features 10

4. Power Input 12

4.1. Default Connector 12

4.2. DC Jack 14

4.3. Ignition Signal 15

5. Touch Screen 17

6. Connectivity 18

6.1. RS232/RS485/CAN 18

6.2. GPIO 20

6.3. USB Connectors 23

6.4. LAN Connectors 25

6.5. WiFi & BT Module 26

6.6. 4G/LTE Module 27

7. TF Card Slot 29

8. Audio Connectors 30

9. HDMI Connector 31

10. PROG Button 32

11. Mounting Procedure 33

12. Mechanical Specifications 34

13. 3D Model 35

14. Disclaimer 36

15. Technical Support 36

PPC-A76-070

Front View

Rear View

Chipsee
PN:CS10600-RK3588-070P
Rev:C111
OS: Debian 11
SN:2024070113000004
https://chipsee.com
Origin:Made in China
6 974174 310804

Side View 1

Side View 2

CAN1-H
CAN1-L
CAN0-H
CAN0-L
RS485_5-
RS485_5+
RS485_4-
RS485_4+
RS485_3-
RS485_3+
RS232_0_RXD
RS232_0_TXD
RS232_2_RXD
RS232_2_TXD
GND
+5V
G
—
+
DC:6~36V
Chipsee

Product Overview

The Cortex®-A76 series PPC-A76-070 (PN: CS10600-RK3588-070P) is a high-quality IP65-compliant industrial panel PC. This single board computer features a 7” 5-point capacitive touch screen with a resolution of 1024 x 600 pixels and brightness of 400 cd/m^2.

Key Applications

- Human Machine Interface HMI
- Mobile Applications
- Video Processing
- Machine Learning
- Video Gaming
- Process Control
- Process Monitoring
- ATM...

It is available as a device hosed in an aluminum casing with bezels, thus facilitating different installation options:

- Installation on an industrial cabinet
- Integration with the existing equipment

The PPC-A76-070 Industrial Panel PC is based around the powerful RK3588J System on Chip (SoC), powered by the Rockchip RK3588J low-power processor which integrates a Quad(4)-core Cortex®-A76 (2.0GHz) and Quad(4)-core Cortex®-A55 (1.8GHz) processor.

The RK3588J supports multi-format video decoders and has a high-performance 8GB LPDDR4 RAM capable of sustaining demanding memory bandwidths. It also provides a complete set of peripheral interfaces.

Ordering Options

Chipsee products can be customized during the ordering process. The product will be shipped with the pre-installed factory defaults if no extra requirements are specified. The table in the Hardware Features section provides information about the default options bundled with the product.

> **Note**
>
> You can order the PPC-A76-070 from the official Chipsee Store or from your nearest distributor.

Operating System

This product comes with a pre-installed OS of your choice. Please see the list below for the supported OSes, which can also be obtained from the Software Documentation section, along with the detailed installation instructions.

- Debian 11
- Buildroot Linux Qt 5.15

> **Warning**
>
> The Software Documentation section provides a detailed instruction on how to install different OSes on your own. However, bear in mind that Chipsee can't take the responsibility of inadequate installation procedure. If you "brick" your device, please contact Chipsee Technical Support at **support@chipsee.com** for further assistance

Optional Features

The PPC-A76-070 Industrial Panel PC does not include 4G/LTE module by default. The module is optional and can be selected at the Chipsee store during the ordering process.

This product doesn't have M.2 PCIe socket.

Warning

Installation, repair, and maintenance tasks should be performed by trained personnel only. Chipsee does not bear any responsibility for damage caused by inadequate handling of the product.

Hardware Features

The PPC-A76-070 Industrial Panel PC offers a broad range of performance and connectivity options for scalable integration, providing expandability according to future needs. Some of the key features are listed in the table below.

PPC-A76-070	
CPU	Rockchip RK3588J, Quad(4)-core Cortex-A76 (2.0GHz) and Quad(4)-core Cortex-A55 (1.8GHz)
GPU	ARM Mali-G610 MC4. Up to 8K60 FPS video decoding, up to 8K30 FPS video encoding.
NPU	Neural network acceleration engine with 6Tops int8, support Int4/8/16/FP16/BF16/TF32.
RAM	8GB LPDDR4
eMMC	64GB
PCIe	N/A
Storage	TF Card, Supports up to 128GB SDHC
Display	7" LCD, 1024 x 600, High Brightness: 400 cd/m^2
HDMI	1 x HDMI-D (Micro-HDMI) Out
Touch	5-point capacitive touch screen
USB	2 x USB 3.0 HOST, 1 x USB Type-C1
LAN	2 x RJ45, GbE
POE	N/A
Audio	3.5mm Audio In/Out Connector, 2W Internal Speaker
Buzzer	Yes
RTC	High accuracy RTC with farad capacitor, can work 1 week after power off **(default)**. High accuracy RTC with lithium coin battery, can work 3 years after power off *(optional)*.
RS232	default 2 x RS232 (Optional 6 x RS232 at most, include 1 debug port)2
RS485	default 3 x RS485 at most2
CAN	default 2 x CAN FD
GPIO	8 Channels Isolated IO, 4 x Input and 4 x Output
WiFi/BT	Integrated WiFi/BT Module
4G/LTE	Supported, Optional
Power Input	From 9V to 30V (supports **optional** 24V ignition signal)
Current	533mA (max) at 15V

PPC-A76-070	
Power Consumption	8W (max)
Working Temperature	From -10°C to +60°C
OS	Debian11, Buildroot Linux Qt 5.15
Dimensions	PPC-A76-070 (PN: CS10600-RK3588-070P): 188.05 x 123.11 x 33.20mm
Weight	PPC-A76-070 (PN: CS10600-RK3588-070P): 700g
Mounting	PPC-A76-070 (PN: CS10600-RK3588-070P): Panel, VESA

Key Features

1 The USB-A host (near RJ45) and USB-C **can't be used** at the same time. Before boot into OS, USB-C is enabled for install OS image; after boot into OS, USB-A is enabled but USB-C is disabled. In Android, these can be configured; in Linux, these can't be configured.

2(1,2) This product has 6 x UART channels in total. The default configuration is 2 x RS232 and 3 x RS485, including 1 debug port. CAN0 can be configured to RS232. UART can be swapped between RS232 and RS485 modes easily, if you need a different RS232/RS485 configuration, please get in touch with the Chipsee Technical Support at **support@chipsee.com**

Power Input

The PPC-A76-070 Industrial Panel PC can be powered by a wide range of input voltages: From 9V to 30V (supports **optional** 24V ignition signal) DC.

There are two DC input interfaces on this device: a **3-pin, 3.81mm terminal**, and a **2.1mm I.D x 5.5mm O.D x 9.5mm DC connector**.

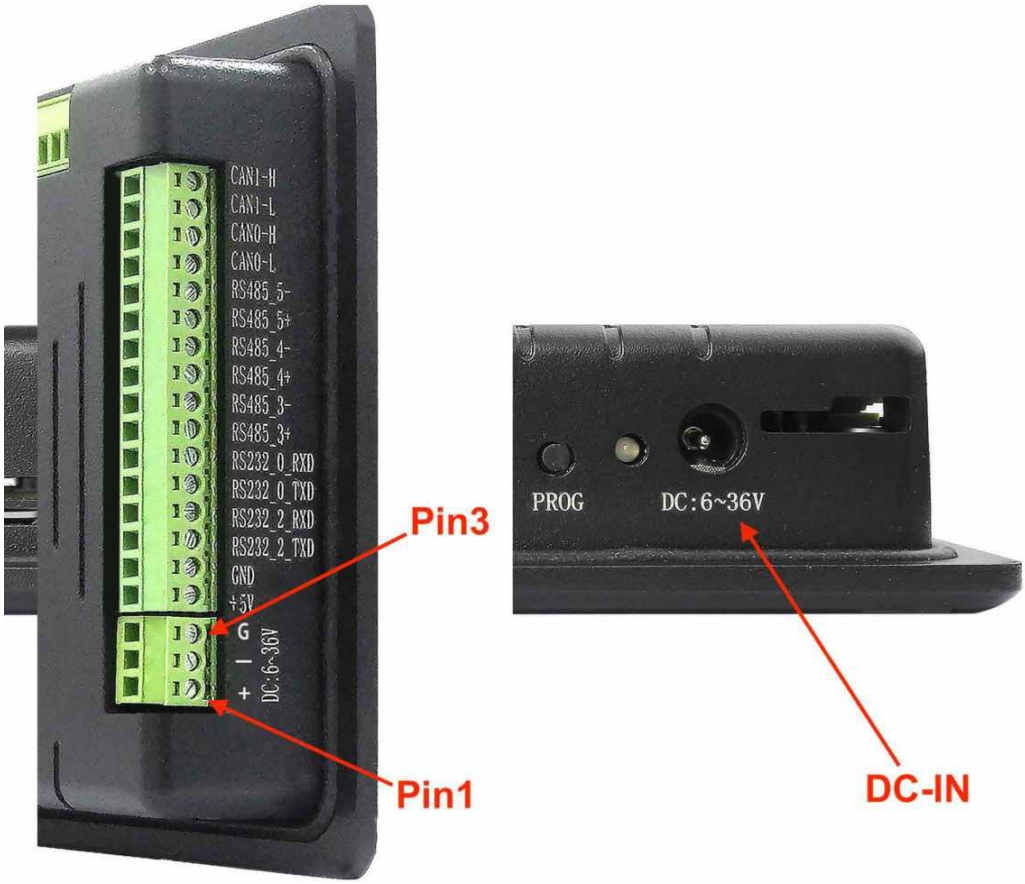

Power Input

Note that the "**+**" sign represents the positive power input. The "**-**" terminal is shorted to the ground.

Default Connector

By default, the 3 pins are +, - and ground.

Power Input Definition		
Pin Number	**Definition**	**Description**
Pin 1	Positive Input	DC Power **Positive Terminal**
Pin 2	Negative Input	DC Power **Negative Terminal**

Power Input Definition		
Pin 3	Ground	**Power System Ground**

Power Connector

Note

The system ground "**G**" is connected to power negative "**-**" on board.

DC Jack

For a proper 2.1mm x 5.5mm x 9.5mm DC power connector, refer to the figure below:.

DC Jack

Ignition Signal

The product has a “ignition signal” **optional** feature. By default the ignition signal is not installed. If you need this feature you can contact us when placing an order. In this setup, Pin 3 is the ignition signal pin.

To use this feature, apply a 24V DC input (relative to -) to Pin 3. If Pin 3 detects a low input voltage, the product will be shutdown. If Pin 3 detects a high input voltage, the product will be boot and running.

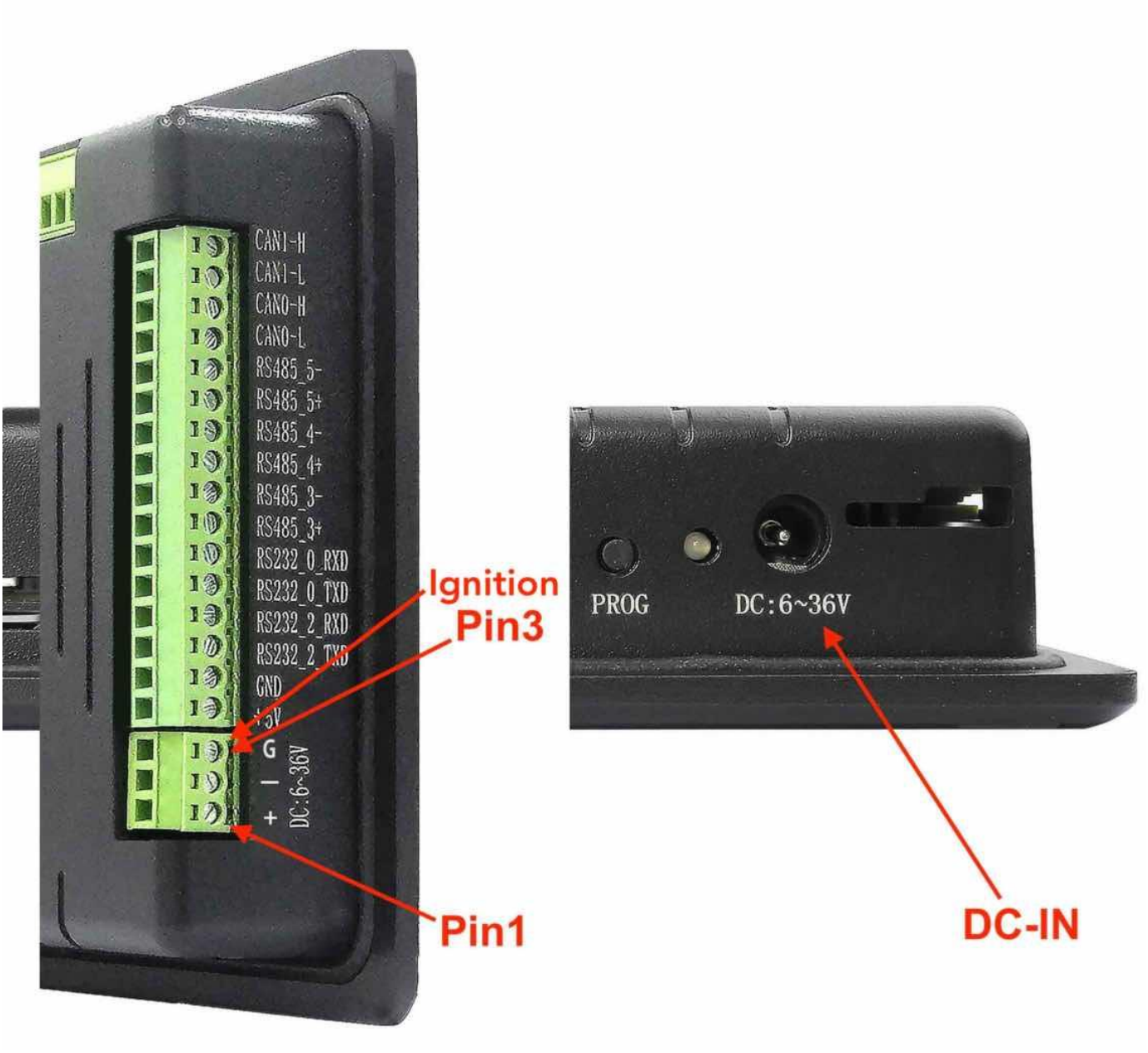

Power Input (with Ignition Signal)

Power Input Definition		
Pin Number	**Definition**	**Description**

Power Input Definition		
Pin 1	Positive Input	DC Power **Positive Terminal**
Pin 2	Negative Input	DC Power **Negative Terminal**
Pin 3	Ignition	**Ignition Signal**

Power Connector with Ignition Signal

Touch Screen

The PPC-A76-070 Industrial Panel PC uses a 5-point capacitive touch screen.

Capacitive Touch Screen Connector

Attention

A capacitive touch screen is susceptible to power noise and Electromagnetic Radiation (EMR). It may cause LCD ripples or even capacitive touch malfunction. If using a capacitive multi-touch test application, you might notice the touch points float erratically across the display. There are several solutions to this problem:

1. Use a high-quality Power Adapter Unit (PSU) with low EMR. You can also provide power from a battery.
2. Make sure that the PPC-A76-070 Power Input connector (pin 3) is properly connected to the Power System Ground to provide sufficient EMI shielding and eliminate the problem entirely.
3. Bad GND problems can also be confirmed by touching pin 3 of the Power Input connector with one hand while operating the capacitive touch screen with the other hand. In this case, the operator's body acts as the Power System Ground.

Connectivity

There are many connectivity options available on the PPC-A76-070 industrial PC. It has 2 x USB 3.0 HOST, 1 x USB Type-C, 2 x RJ45, GbE (RJ45) Ethernet connector supporting up to 1 Gbps, and 5 x UART terminals (RS232/RS485), 2 x CAN FD.

RS232/RS485/CAN

The serial communication interfaces (RS485, RS232, and CAN FD) are routed to a **16-pin 3.81mm terminal**, as illustrated on the figure below.

Serial communication on both RS485 and RS232 interfaces can reach up to 115200 kbps.

> **Attention**
>
> 1. The 120Ω match resistor for the CAN bus is NOT mounted by default.
> 2. The 120Ω match resistor for the RS485 is mounted by default.
> 3. RS485_3, RS485_4 and RS485_5 can control the input and output direction automatically. There's no need to control it from within the software.

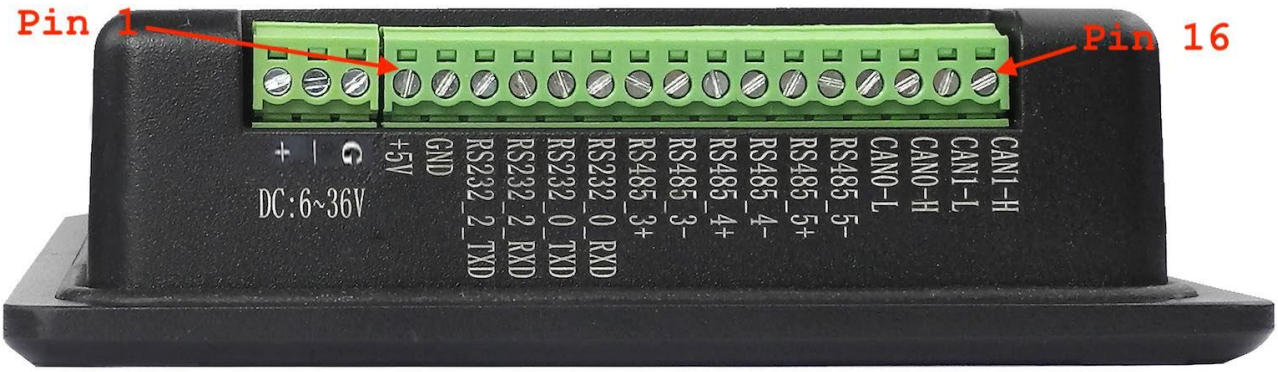

RS232 RS485 CAN Pins

The table below offers more detailed description of every pin and its definition:

Pin Number	Definition	Description	OS Node
Pin 16	CAN1_H	CPU CAN2_M1, CAN H signal	
Pin 15	CAN1_L	CPU CAN2_M1, CAN L signal	CAN1
Pin 14	CAN0_H	CPU CAN1_M1, CAN H signal	
Pin 13	CAN0_L	CPU CAN1_M1, CAN L signal	CAN0
Pin 12	RS485_5-	CPU UART1, RS485 –(B) signal	
Pin 11	RS485_5+	CPU UART1, RS485 +(A) signal	/dev/ttyS1
Pin 10	RS485_4-	CPU UART0, RS485 –(B) signal	

Pin Number	Definition	Description	OS Node
Pin 9	RS485_4+	CPU UART0, RS485 +(A) signal	/dev/ttyS0
Pin 8	RS485_3-	CPU UART4, RS485 –(B) signal	
Pin 7	RS485_3+	CPU UART4, RS485 +(A) signal	/dev/ttyS4
Pin 6	RS232_0_RXD	CPU UART6, RS232 RXD signal	
Pin 5	RS232_0_TXD	CPU UART6, RS232 TXD signal	/dev/ttyS6
Pin 4	RS232_2_RXD	CPU UART2, RS232 RXD signal, Debug Port	
Pin 3	RS232_2_TXD	CPU UART2, RS232 TXD signal, Debug Port	/dev/ttyFIQ
Pin 2	GND	System Ground	
Pin 1	+5V	System +5V Power Output, No more than 1A Current output	

RS232 / RS485 / CAN Pin Definition

GPIO

The PPC-A76-070 Industrial Panel PC features a **10-pin 3.81 mm terminal** that provides 8 x opto-isolated GPIO pins, of which 4 x are output, and 4 x are input pins.

The GPIO **HIGH** output level corresponds to the voltage connected at the isolated Power Input, while the GPIO **LOW** output level corresponds to the isolated Ground Input.

The GPIO uses the 24V logic by default. You can use an external isolated power input but the power input range should be from 5V to 24V DC.

Attention

1. In order to use the Isolated Output, you need to add an external Isolated Power to the VDD_ISO and GND_ISO. The power voltage should not exceed 24V.
2. The output current can supply 500mA for every channel, but it also depends on the isolated power that is connected.
3. In order to use the Isolated Input, you need to add a signal to the InputX and GND_ISO. A 2.4KΩ resistor has been added to limit the input current, as shown in the figure below. This resistor should work well for the 5-24V input signal. If your input signal is less than 5V, please change this input resistor. The reduced schematic is for reference purpose, if you need the precise resistor schematic, please contact us.
4. If the isolation is not a requirement, it is possible to use a non-isolated PSU instead. It is also possible to use the onboard 5V power supply: it can be re-routed to the *Isolated Power Input* pin by populating two PCB resistor footprints with 0Ω resistors. In this case, the *Isolated Power Input* pin will become an output for the onboard 5V power supply.

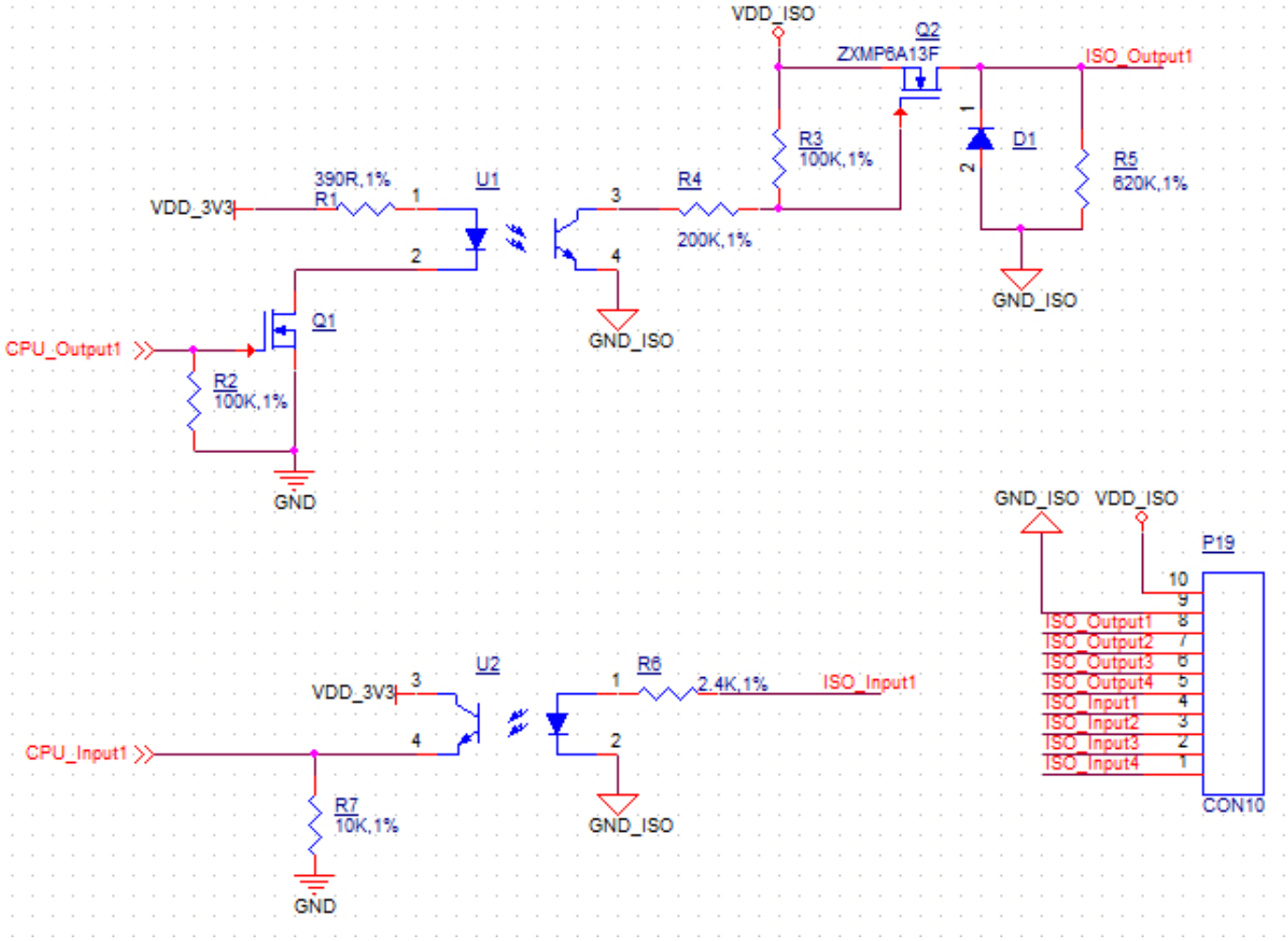

Isolated GPIO reduced schematic

GPIO Terminal

Pin Number	**Definition**	GPIOD Chip	GPIOD Line
Pin 1	Isolated Power Input		
Pin 2	Isolated Ground Input		

Pin Number	Definition	GPIOD Chip	GPIOD Line
Pin 3	OUT1	4	14
Pin 4	OUT2	4	13
Pin 5	OUT3	4	8
Pin 6	OUT4	4	7
Pin 7	IN1	4	6
Pin 8	IN2	1	9
Pin 9	IN3	1	8
Pin 10	IN4	1	6

GPIO Pinout

USB Connectors

There are 2 x **USB HOST** and 1 x **USB DEVICE** (for flashing OS) ports onboard: 2 x USB 3.0 HOST, 1 x USB Type-C, as shown in the figures below.

> ⚠ **Warning**
>
> **Please unplug USB mouse/keyboard** near RJ45 when flashing OS.

The USB-A host (near RJ45) and USB-C **can't be used** at the same time. Before boot into OS, USB-C is enabled for install OS image; after boot into OS, USB-A is enabled but USB-C is disabled. In Android, these can be configured; in Linux, these can't be configured.

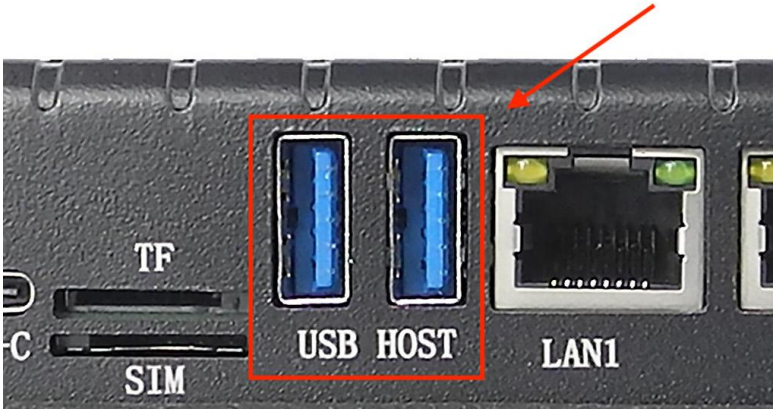

USB 3.0 HOST Port

USB Type-C Port

Warning

Be careful not to touch surrounding electronic components accidentally while plugging USB devices into the embedded IPC version.

LAN Connectors

LAN (RJ45) connector provides 2 x RJ45 Ethernet connectivity over standardized Ethernet cables as shown in the figure below. The integrated Ethernet interface supports up to 1 Gbps data throughput.

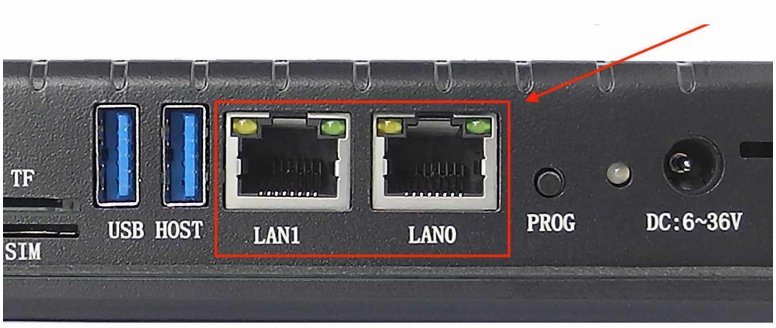

RJ45 LAN Connector

Note

Use CAT5 or better cables to achieve full data throughput over maximum distance defined by the 1000BASE-T standard (100m).

WiFi & BT Module

The PPC-A76-070 Industrial Panel PC is equipped with the WiFi-6 **Realtek RTL8852BE WiFi/BT** chip (through CPU PCIe lane) which supports Bluetooth V2.1+EDR/4.2/5.2, as well as IEEE802.11a/b/g/n/ac/ax 2.4/5 GHz Wireless LAN (WLAN).

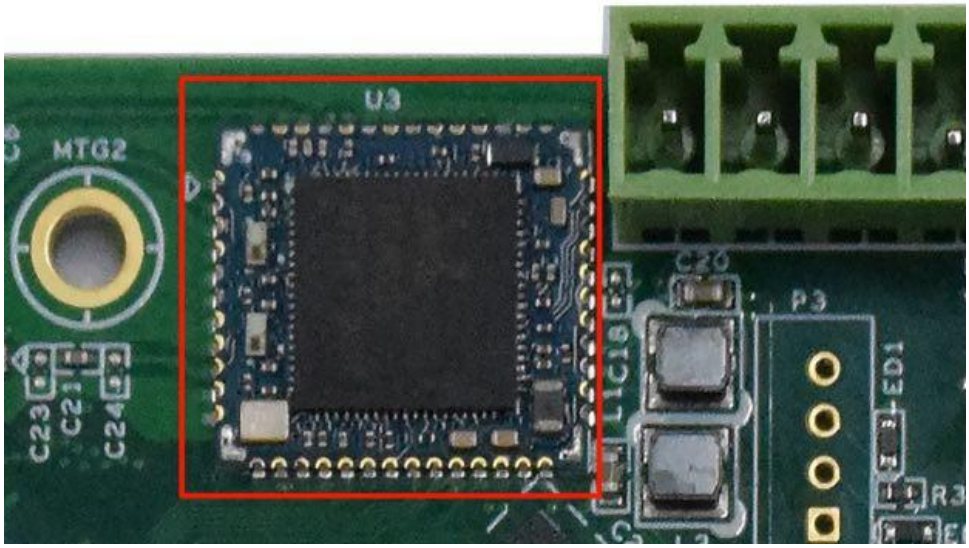

Realtek RTL8852BE Chip

The PPC-A76-070 includes an SMA connector for an external WiFi/BT antenna, as illustrated in the figure below.

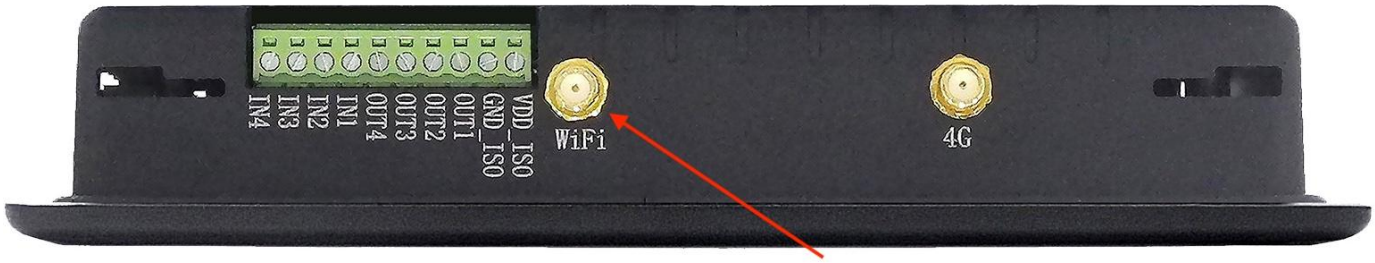

WiFi+BT Antenna SMA

4G/LTE Module

The PPC-A76-070 Industrial Panel PC is equipped with a **mini-PCIe connector** (through USB CPU lane) that can connect an **optional** 4G/LTE module. The customer will also need a SIM Card Holder and a 4G/LTE antenna connector to ensure 4G/LTE works on the PPC-A76-070. SIM card does **NOT** support hot plug. **Power off** before inserting or removing SIM card.

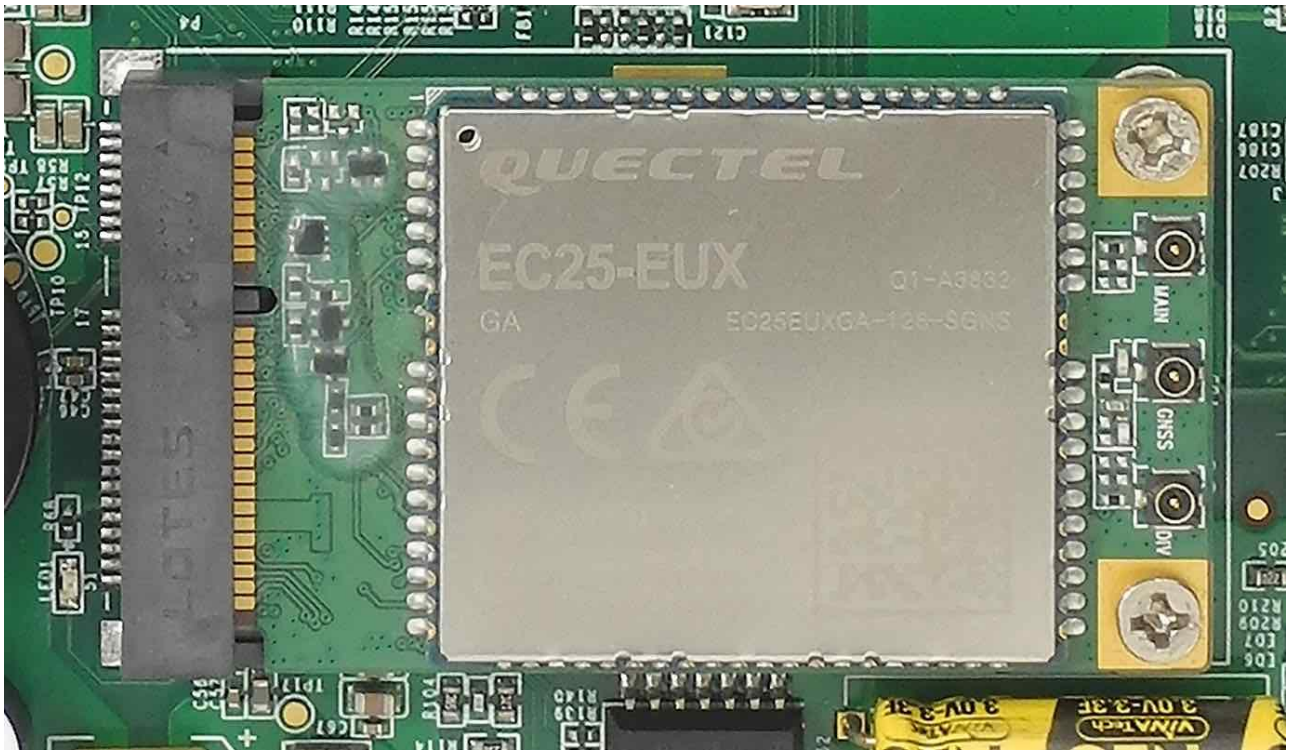

Mini PCI-e and 4G/LTE Module

4G/LTE Antenna

SIM Card Direction

Attention

The product does not come shipped with the 4G/LTE module by default. The customer can choose the 4G/LTE module option when placing an order, we will install all the necessary components.

TF Card Slot

The PPC-A76-070 Industrial Panel PC features 1 x **TF Card (micro SD) slot**. TF Card can address up to 128GB of storage.

TF (micro SD) Card Slot

Note

The product does not come shipped with the TF Card by default.

Audio Connectors

The PPC-A76-070 Industrial Panel PC features some audio peripherals. It has a **3.5mm audio input/output jack**, an **internal speaker**, as well as a small **buzzer**.

Audio Connector

The miniature 2W embedded speaker is handy for audio reproduction, the small buzzer can play alarm/notification sounds.

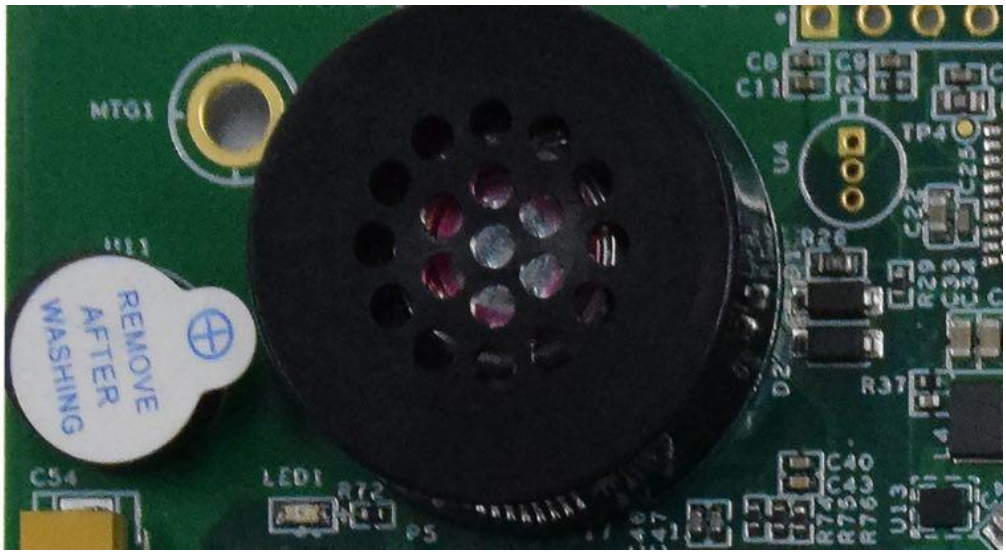

2W Micro Speaker and Buzzer

Attention

By plugging in the headphone cable, the internal speaker will be disabled automatically.

HDMI Connector

The PPC-A76-070 Industrial Panel PC is equipped with 1 x HDMI-D (Micro-HDMI) Out port. The HDMI connector allows connecting an additional (external) monitor. HDMI output resolution can be configured by the software.

HDMI Connector

PROG Button

The PPC-A76-070 Industrial Panel PC has one button on the board marked as PROG, as shown in the figure below.
When the button is pressed before powering up, the PPC-A76-070 will enter MASKROM mode. In this mode you can use a USB Type-C cable to upgrade its operating system. You can use this feature to flash another OS to the internal eMMC.

When the button is not pressed before and during power up, the PPC-A76-070 will boot normally.

There is no need to press the button during regular operation. However, if you need to flash the OS in MASKROM mode, the button will be used. Please refer to the software documents for more information.

PROG Button

Mounting Procedure

You can mount PPC-A76-070 with VESA mounting (guide): **75 x 75** mm, 4 x **M4** (6mm) screws.

You can also mount PPC-A76-070 with panel mounting method (guide).

> **Attention**
>
> Please make sure the display is not exposed to high pressure when mounting into an enclosure.

Mechanical Specifications

For PPC-A76-070, the outer mechanical dimensions are 188.05 x 123.11 x 33.20mm (W x L x H).

Please refer to the technical drawing in the figure below for details related to the specific product measurements.

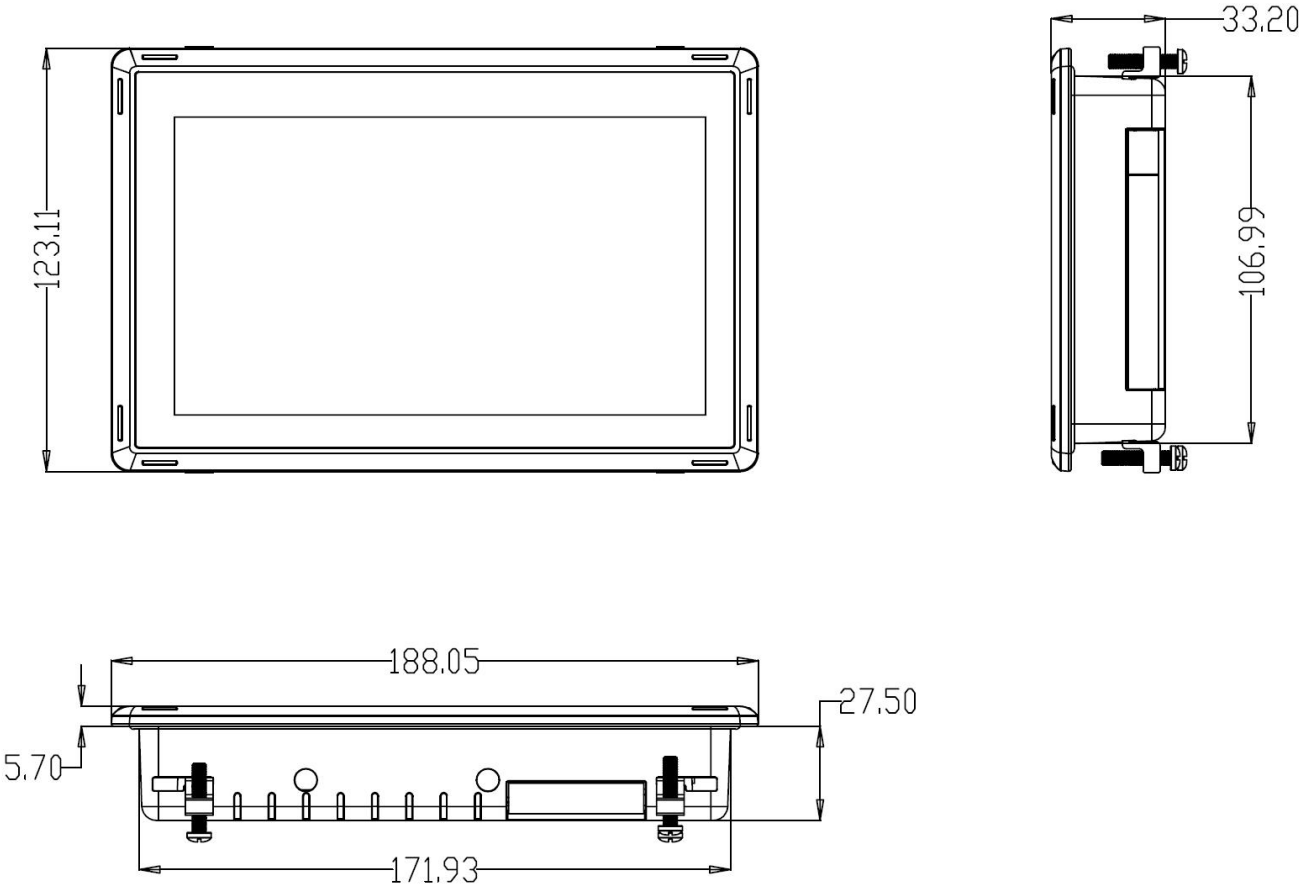

PPC-A76-070 *Technical Drawing*

3D Model

PPC-A76-070 3D model can be viewed in the online doc in a web browser, **if you are reading from the PDF** version, please visit the online doc PPC-A76-070, select hardware documentation, drag the navigation bar to the 3D Model section.

Disclaimer

This document is provided strictly for informational purposes. Its contents are subject to change without notice. Chipsee assumes no responsibility for any errors that may occur in this document. Furthermore, Chipsee reserves the right to alter the hardware, software, and/or specifications set forth herein at any time without prior notice and undertakes no obligation to update the information contained in this document.

While every effort has been made to ensure the accuracy of the information contained herein, this document is not guaranteed to be error-free. Further, it does not offer any warranties or conditions, whether expressed orally or implied in law, including implied warranties and conditions of merchantability or fitness for a particular purpose. We specifically disclaim any liability with respect to this document, and no contractual obligations are formed either directly or indirectly by this document.

Despite our best efforts to maintain the accuracy of the information in this document, we assume no responsibility for errors or omissions, nor for damages resulting from the use of the information herein. Please note that Chipsee products are not authorized for use as critical components in life support devices or systems.

Technical Support

If you encounter any difficulties or have questions related to this document, we encourage you to refer to our other documentation for potential solutions. If you cannot find the solution you're looking for, feel free to contact us. Please email Chipsee Technical Support at **support@chipsee.com**, providing all relevant information. We value your queries and suggestions and are committed to providing you with the assistance you require.