Industrial PC

PPC-A35-133

PN: CS19108-STMP25-133P

Content can change at anytime, check our website for latest information of this product.
www.chipsee.com

Contents

PPC-A35-133 3

1. Product Overview 7

2. Ordering Options 8

2.1. Operating System 8

2.2. Optional Features 9

3. Hardware Features 10

4. Power Input 12

4.1. Ignition Signal 13

5. Touch Screen 14

6. Connectivity 15

6.1. RS232/RS485/CAN 15

6.2. GPIO Port 17

6.3. USB Connectors 19

6.4. LAN Connectors 20

6.5. WiFi & BT Module 21

6.6. 4G/LTE Module 22

7. TF Card Slot 23

8. Audio Connectors 24

9. PROG Button 26

10. Mounting Procedure 27

11. Mechanical Specifications 28

12. Disclaimer 29

13. Technical Support 29

PPC-A35-133

Front View

Rear View

CAUTION
Hot surface!!
警告
这是甲类的信息产品，在居住的环境中使用时，可能会造成射频干扰。在这种情况下，使用者会被要求采取某些适合的对策。
CAUTION
To prevent electric shock. Do not remove the cover repairs,maintenance work must be performed by professionals.
Chipsee
PN:CS19108-STMP25-133P
Rev:C111
OS: Yocto
SN: 202505061400001O
https://chipsee.com
Origin:Made in China
CAUTION
Hot surface

Side View 1

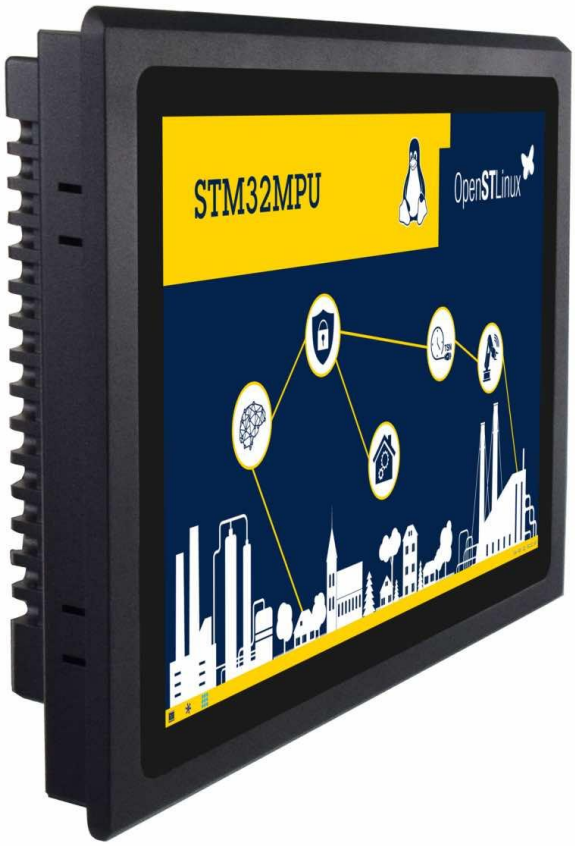

Side View 2

CAUTION
Hot surface!!
警告
CAUTION
To prevent electric shock.
Do not remove the cover
repairs,maintenance work
must be performed by
professionals.
Chipsee
PN:CS19108-STMP25-133P
Rev:C111
OS: Yocto
SN: 202505061400001 0
https://chipsee.com
Origin:Made in China
CAUTION
Hot surface

Product Overview

The Cortex®-A35 series PPC-A35-133 (PN: CS19108-STMP25-133P) is a high-quality industrial panel PC. This single board computer features a 13.3” 10-point capacitive touch screen with a resolution of 1920 x 1080 pixels and a brightness of 400 cd/m^2.

Key Applications

- Human Machine Interface HMI
- Mobile Applications
- Video Processing
- Machine Learning
- Video Gaming
- Process Control
- Process Monitoring
- ATM...

It is available as a device hosed in an aluminum casing with bezels.

The PPC-A35-133 Industrial Panel PC is based around the STM32MP257F System on Chip (SoC), powered by the STMicroelectronics low-power processor which integrates a dual(2)-core Cortex®-A35 1.5GHz processor.

The STM32MP257F supports multi-format video decoders and has a high-performance DDR4 4GB RAM capable of sustaining demanding memory bandwidths. It also provides a complete set of peripheral interfaces.

It also features a 1.35 Tops NPU for AI features.

Ordering Options

Chipsee products can be customized during the ordering process. The product will be shipped with the pre-installed factory defaults if no extra requirements are specified. The table in the Hardware Features section provides information about the default options bundled with the product.

> **Note**
>
> You can order the PPC-A35-133 from the official Chipsee Store or from your nearest distributor.

Operating System

This product comes with a pre-installed OS of your choice. Please see the list below for the supported OSes, which can also be obtained from the Software Documentation section, along with the detailed installation instructions.

- Yocto Linux

> **Warning**
>
> The Software Documentation section provides a detailed instruction on how to install different OSes on your own. However, bear in mind that Chipsee can't take the responsibility of inadequate installation procedure. If you "brick" your device, please contact Chipsee Technical Support at **support@chipsee.com** for further assistance.

Optional Features

The PPC-A35-133 Industrial Panel PC: Does not include the 4G/LTE module by default. The module is optional and can be selected at the Chipsee store during the ordering process.

The PPC-A35-133 Industrial Panel PC: By default M.2 slot is not installed, please contact us before placing an order if you need M.2 slot or M.2 devices.

Warning

Installation, repair, and maintenance tasks should be performed by trained personnel only. Chipsee does not bear any responsibility for damage caused by inadequate handling of the product.

Hardware Features

The PPC-A35-133 Industrial Panel PC offers a broad range of performance and connectivity options for scalable integration, providing expandability according to future needs. Some of the key features are listed in the table below.

PPC-A35-133	
CPU	STM32MP257F, Dual(2)-core Cortex-A35 (1.5GHz)
GPU	VeriSilicon GC8000UL - Open GL ES 3.2.8 - Vulkan 1.2, 900 MHz, up to 150 Mtriangle/s or 900 Mpixel/s
NPU	VeriSilicon GC8000UL - TensorFlowLite - ONNX - Linux NN, 900 MHz, 1.35 TOPS
RAM	DDR4 4GB
eMMC	16GB
PCIe	1 x PCIe2.0 x1, M.2 M-Key 2230/2242/2260/2280 socket (**optional**)
Storage	TF Card, Supports up to 128GB SDHC
Display	13.3” LCD, 1920 x 1080, High Brightness: 400 cd/m^2
Touch	10-point capacitive touch screen
USB	2 x USB 2.0 HOST, 1 x USB Type-C
LAN	1 x RJ45, GbE, **optional** Power over Ethernet (PoE) port
Audio	3.5mm Audio In/Out Connector, 1W Internal Speaker
Buzzer	Yes
RTC	High accuracy RTC with farad capacitor, can work 1 week after power off **(default)**. High accuracy RTC with lithium coin battery, can work 3 years after power off *(optional)*.
RS232	default 2 x RS232 (Optional 6 x RS232 at most, including 1 debug port)1
RS485	default 2 x RS485 (Optional 3 x RS485 at most)1
CAN	default 2 x CAN FD (2 x CAN FD can be configured to RS232 optionally or 1 x CAN FD can be configured to RS485 optionally)
GPIO	8 Channels Isolated IO, 4 x Input and 4 x Output
WiFi/BT	Integrated WiFi/BT Module
4G/LTE	Supported, Optional
Power Input	From 15V to 30V (supports optional 24V ignition signal)
Current	800mA max at 15V, 700mA typical at 15V
Power Consumption	12W max, 10.5W typical
	From 0°C to +80°C

PPC-A35-133	
Working Temperature	
OS	Yocto Linux
Dimensions	PPC-A35-133 (PN: CS19108-STMP25-133P): 355 x 225 x 55mm
Weight	PPC-A35-133 (PN: CS19108-STMP25-133P): 3000g
Mounting	PPC-A35-133 (PN: CS19108-STMP25-133P): Panel, VESA

Key Features

1(1,2) This product has 6 x CPU UART, the default configuration is 2 x RS232 and 2 x RS485, including 1 x RS232 debug port. There are 2 x CAN FD that can be configured to RS232, or 1 x CAN FD that can be configured to RS485. UART can be swapped between RS232 and RS485 modes easily, if you need a different RS232/RS485/CAN configuration, please get in touch with the Chipsee Technical Support at **support@chipsee.com** when placing an order.

Power Input

The PPC-A35-133 Industrial Panel PC can be powered by a wide range of input voltages: From 15V to 30V (supports optional 24V ignition signal) DC. The power input connector is a **3-pin, 3.81mm terminal**. The polarity and the pinout is shown in the figure below.

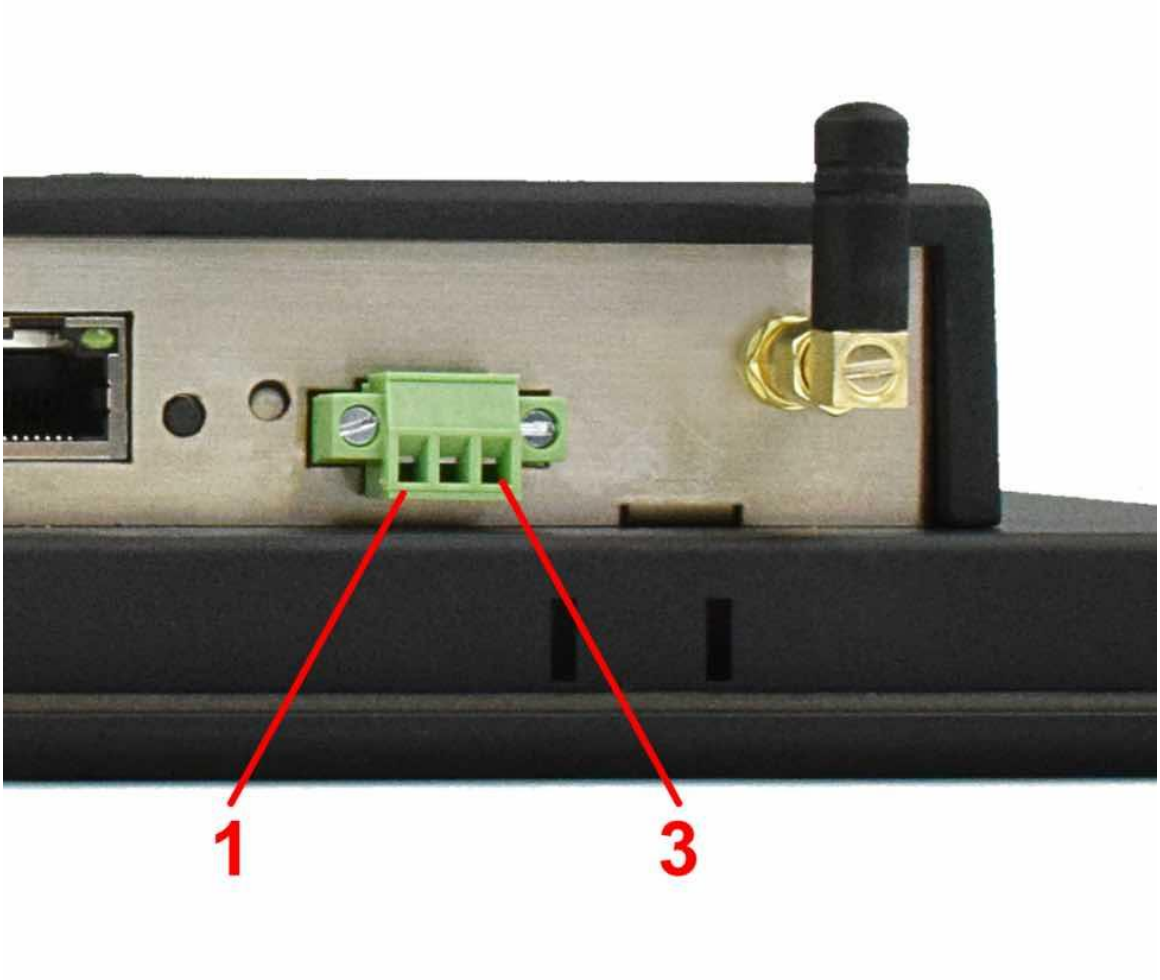

Power Input

Note that the "**+**" sign represents the positive power input. The "**-**" terminal is shorted to the ground.

Power Input Definition		
Pin Number	**Definition**	**Description**
Pin 1	Positive Input	DC Power **Positive Terminal**
Pin 2	Negative Input	DC Power **Negative Terminal**
Pin 3	Ground	**Power System Ground**

Power Connector

Note

> The system ground "**G**" is connected to power negative "**-**" on board.

Ignition Signal

The product has a "ignition signal" **optional** feature. By default the ignition signal is not installed. If you need this feature you can contact us when placing an order. In this setup, Pin 3 is the ignition signal pin.

To use this feature, apply a 24V DC input (relative to -) to Pin 3. If Pin 3 detects a low input voltage, the product will be shutdown. If Pin 3 detects a high input voltage, the product will be boot and running.

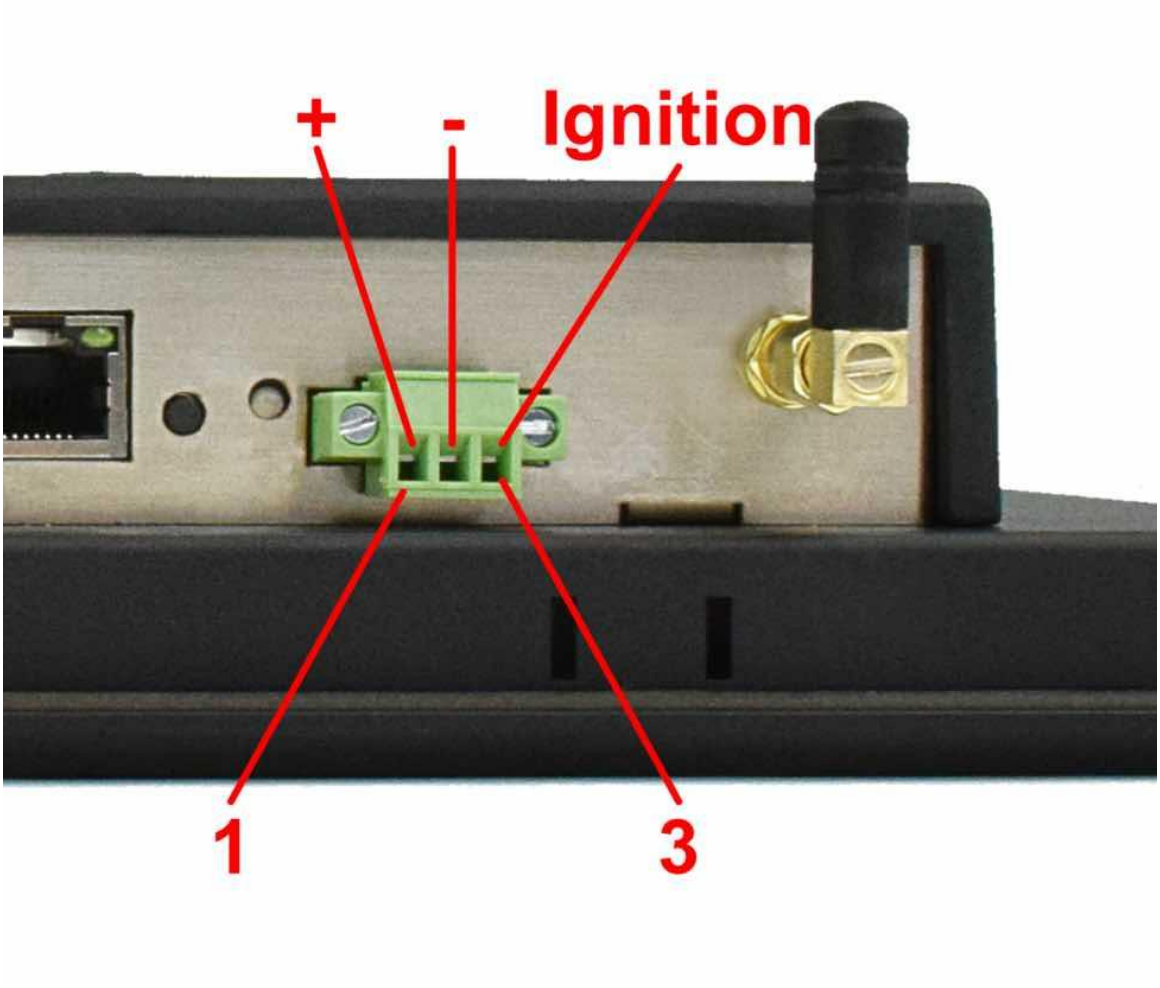

Power Input (with Ignition Signal)

Power Input Definition		
Pin Number	**Definition**	**Description**
Pin 1	Positive Input	DC Power **Positive Terminal**
Pin 2	Negative Input	DC Power **Negative Terminal**
Pin 3	Ignition	**Ignition Signal**

Power Connector with Ignition Signal

Touch Screen

The PPC-A35-133 Industrial Panel PC uses a 10-point capacitive touch screen. The touch layer is connected through USB.

Attention

A capacitive touch screen is susceptible to power noise and Electromagnetic Radiation (EMR). It may cause LCD ripples or even capacitive touch malfunction. If using a capacitive multi-touch test application, you might notice the touch points float erratically across the display. There are several solutions to this problem:

1. Use a high-quality Power Adapter Unit (PSU) with low EMR. You can also provide power from a battery.
2. Make sure that the PPC-A35-133 Power Input connector (pin 3) is properly connected to the Power System Ground to provide sufficient EMI shielding and eliminate the problem entirely.
3. Bad GND problems can also be confirmed by touching pin 3 of the Power Input connector with one hand while operating the capacitive touch screen with the other hand. In this case, the operator's body acts as the Power System Ground.

Connectivity

There are many connectivity options available on the PPC-A35-133 industrial PC. It has 2 x USB 2.0 HOST, 1 x USB Type-C; 1 x RJ45, GbE, **optional** Power over Ethernet (PoE) port; up to 6 x UART terminals (RS232/RS485), up to 2 x CAN FD.

RS232/RS485/CAN

The serial communication interfaces (RS485, RS232, and CAN) are routed to a **phoenix terminal**, as illustrated on the figure below.

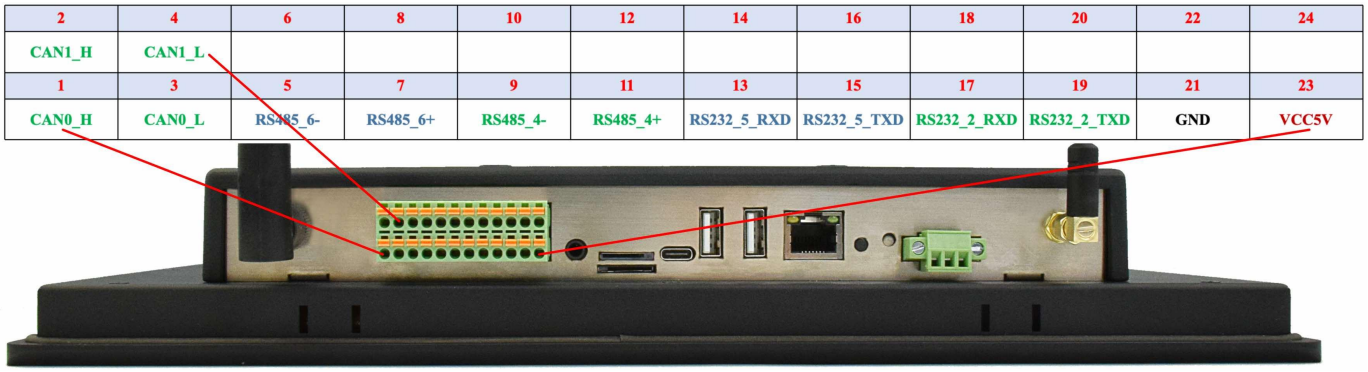

RS232, RS485 and CAN

This product has 6 x CPU UART, the default configuration is 2 x RS232 and 2 x RS485, including 1 x RS232 debug port. There are 2 x CAN FD that can be configured to RS232, or 1 x CAN FD that can be configured to RS485.

Pin Number	Definition	Description	OS Node
2	CAN1_H	CPU CAN1 H signal	
4	CAN1_L	CPU CAN1 L signal	CAN1
1	CAN0_H	CPU CAN0 H signal	
3	CAN0_L	CPU CAN0 L signal	CAN0
5	RS485_6-	CPU UART6 RS485 –(B) signal	
7	RS485_6+	CPU UART6 RS485 +(A) signal	/dev/ttySTM3
9	RS485_4-	CPU UART4 RS485 –(B) signal	
11	RS485_4+	CPU UART4 RS485 +(A) signal	/dev/ttySTM2
13	RS232_5_RXD	CPU UART5 RS232 RXD signal	
15	RS232_5_TXD	CPU UART5 RS232 TXD signal	/dev/ttySTM1
17	RS232_2_RXD	CPU UART2 RS232 RXD signal, Debug Port	
19	RS232_2_TXD	CPU UART2 RS232 TXD signal, Debug Port	/dev/ttySTM0

Pin Number	Definition	Description	OS Node
21	GND	System Ground	
23	+5V	System +5V Power Output, No more than 1A Current output	

RS232 / RS485 / CAN Pin Definition for 10.1 inch and above products

Attention

1. RS485 can control the input and output direction automatically. There's no need to control it from within the software.
2. The 120Ω match resistor for the **RS485** is **NOT mounted** by default.
3. The 120Ω match resistor for the **CAN** bus is **NOT mounted** by default.

GPIO Port

The PPC-A35-133 Industrial Panel PC features a **phoenix connector** that provides 8 x opto-isolated GPIO pins, of which 4 x are output, and 4 x are input pins. The terminal also includes an isolated PSU input in the range of 5 to 24 VDC. The exact pinout is given in follow table.

The GPIO **HIGH** output level corresponds to the voltage connected at the isolated Power Input, while the GPIO **LOW** output level corresponds to the isolated Ground Input. Each GPIO output can drive loads up to 500mA, enough to drive various applications directly, such as relays or solenoid valves.

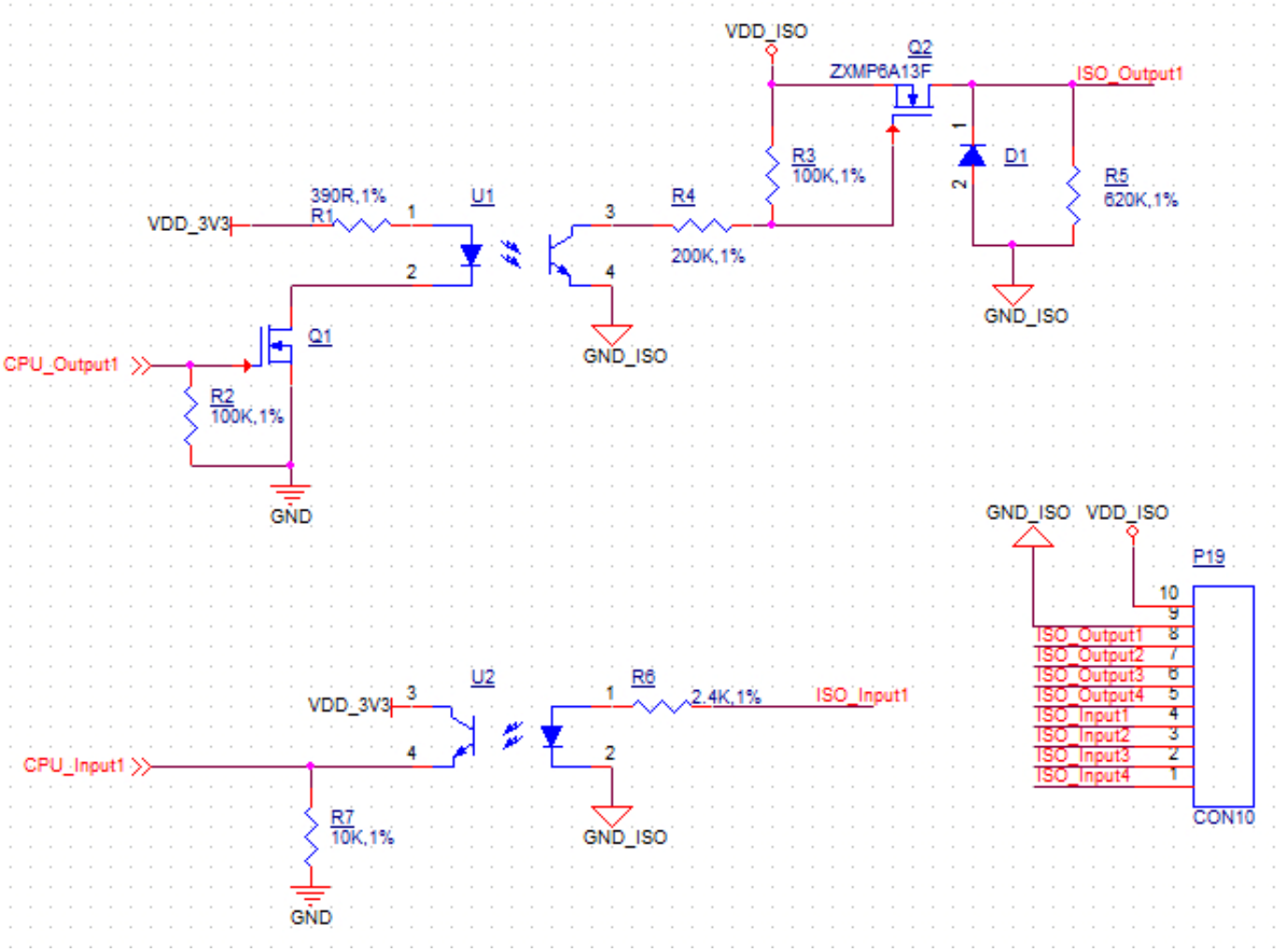

Isolated GPIO reduced schematic

Attention

- If the isolation is not a requirement, it is possible to use a non-isolated PSU instead on the Isolated Power Input.
- The GPIO has been Opt-Isolated and it uses the 24V Logic by default.
- The 4 output channels can drive at most 500mA current on each channel.

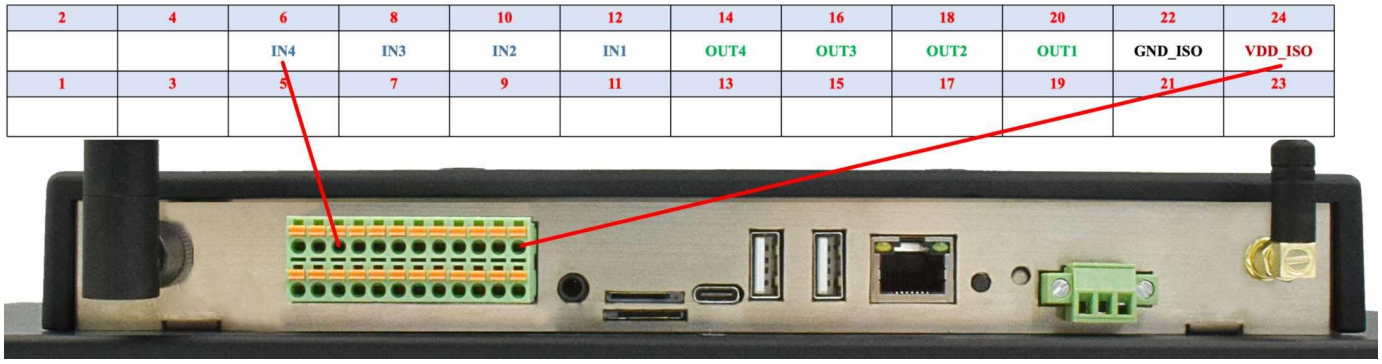

GPIO

Pin Number	Definition	GPIO	GPIOD Chip	GPIOD Line
6	IN4	PZ2	11	2
8	IN3	PZ3	11	3
10	IN2	PZ4	11	4
12	IN1	PZ5	11	5
14	OUT4	PZ9	11	9
16	OUT3	PZ8	11	8
18	OUT2	PZ7	11	7
20	OUT1	PZ6	11	6
22	GND_ISO (Isolated Ground Input)			
24	VDD_ISO (Isolated Power Input)			

GPIO Connector Pin-out

USB Connectors

There are 2 x **USB HOST** and 1 x **USB DEVICE** (for flashing OS) ports onboard: 2 x USB 2.0 HOST, 1 x USB Type-C, as shown in the figures below.

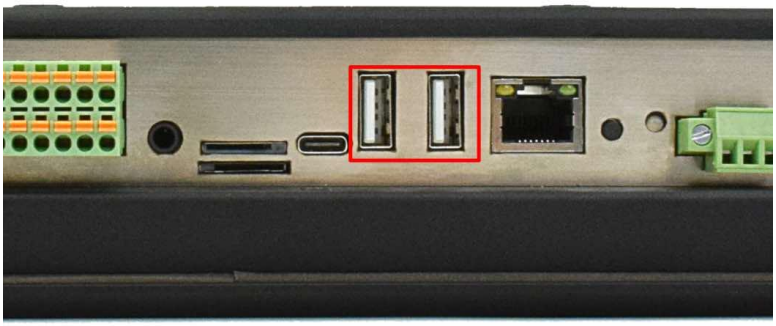

USB 2.0 HOST Port

USB Type-C Port

Warning

Be careful not to touch surrounding electronic components accidentally while plugging USB devices into the embedded IPC version.

LAN Connectors

LAN (RJ45) connector provides Ethernet connectivity over standardized Ethernet cables as shown in the figure below. The integrated 1 x RJ45, GbE, **optional** Power over Ethernet (PoE) port interface supports up to 1 Gbps data throughput.

The LAN0 port supports **optional** Power over Ethernet (PoE) feature.

RJ45 LAN Connector

Note

Use CAT5 or better cables to achieve full data throughput over maximum distance defined by the 1000BASE-T standard (100m).

WiFi & BT Module

The PPC-A35-133 Industrial Panel PC is equipped with the popular **Realtek RTL8821CS WiFi/BT module** which supports BT/BLE 2.1/3.0/4.2, as well as 802.11ac/abgn 433Mbps 2.4/5.8 GHz Wireless LAN (WLAN).

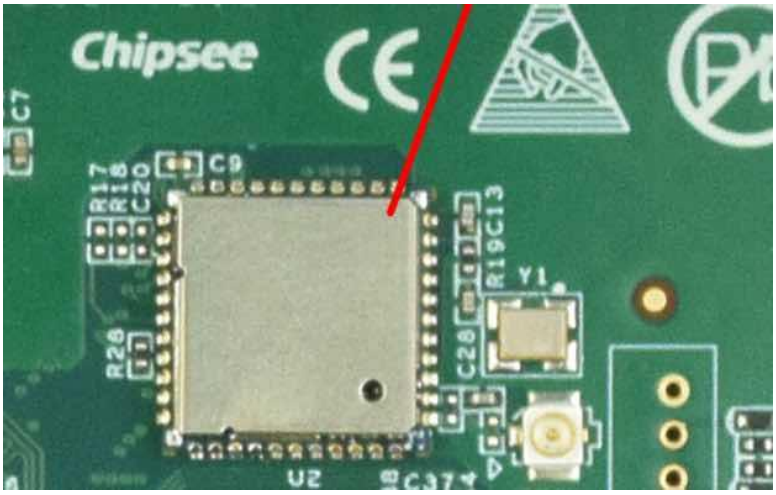

RTL8821CS WiFi/BT Module

The PPC-A35-133 includes an SMA connector for an external WiFi/BT antenna, as illustrated in the figure below.

WiFi+BT Antenna SMA

4G/LTE Module

The PPC-A35-133 Industrial Panel PC is equipped with a **mini-PCIe connector** that can connect a 4G/LTE module. The customer will also need a SIM Card Holder and a 4G/LTE Antenna Connector to ensure 4G/LTE works on the PPC-A35-133. SIM card does **NOT** support hot plug. **Power off** before inserting or removing SIM card.

mini-PCIe Connector & 4G/LTE Module

SIM Card Direction (Micro SIM Card)

Attention

The product does not come shipped with the 4G/LTE module by default. The customer can choose the 4G/LTE module option when placing an order, we will install all the necessary components.

TF Card Slot

The PPC-A35-133 Industrial Panel PC features 1 x **TF Card (micro SD) slot**. TF Card can address up to 128GB of storage.

TF (micro SD) Card Slot

Note

The product does not come shipped with the TF Card by default.

Audio Connectors

The PPC-A35-133 Industrial Panel PC features some audio peripherals. It has a **3.5mm audio input/output jack**, an **internal speaker**, as well as a small **buzzer**.

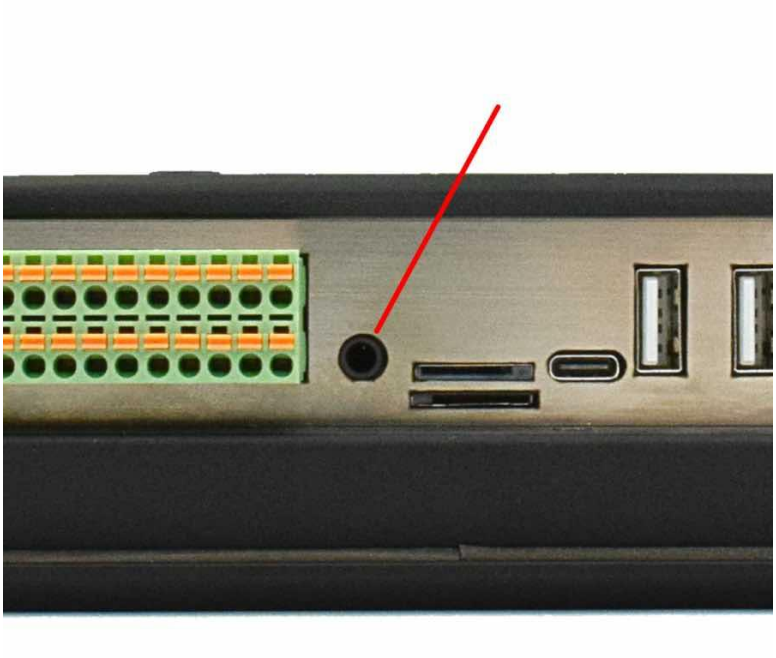

Audio Connector

The miniature 2W embedded speaker is handy for audio reproduction, the small buzzer can play alarm/notification sounds.

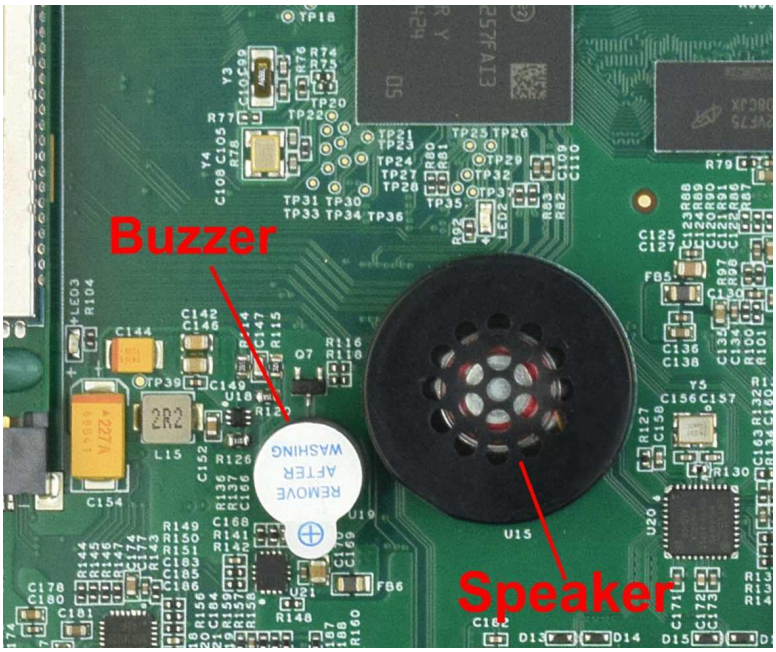

2W Micro Speaker and Buzzer

Attention

> By plugging in the headphone cable, the internal speaker will be disabled automatically.

PROG Button

The PPC-A35-133 Industrial Panel PC has one button on the board marked as PROG, as shown in the figure below. It controls how the device will be booted.

When the button is not pressed while powering up, the PPC-A35-133 will boot normally from eMMC.

To boot from USB-C port for flashing operating system image, press and hold the PROG button, then connect the power supply, hold the button for a few seconds, it will be boot to the flashing OS mode.

By default the product doesn't support booting from Micro SD card, however if you need to boot from Micro SD card, you can contact us before placing an order.

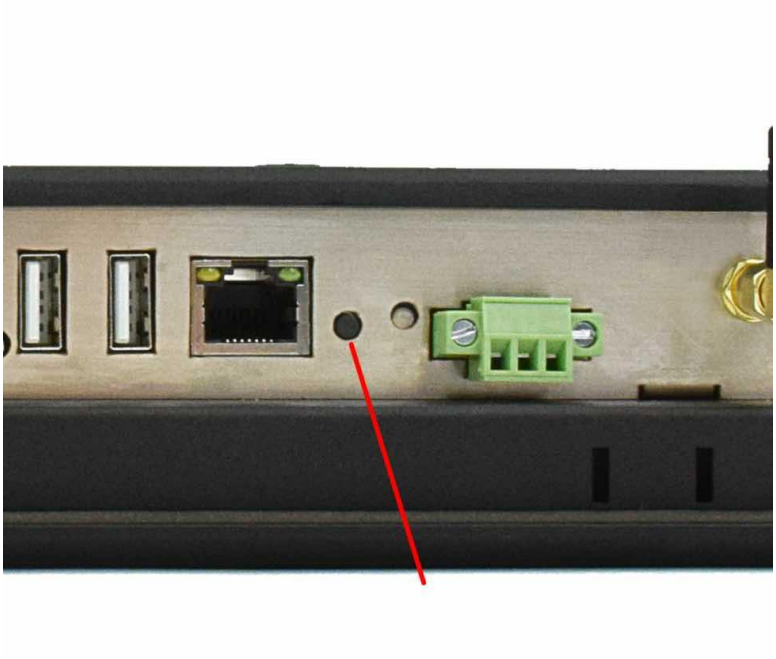

PROG Button

Mounting Procedure

You can mount PPC-A35-133 with VESA mounting (guide): **75 x 75** mm or **100 x 100** mm, 4 x **M4** (6mm) screws, enabling simplified installation onto any standard mounting fixture.

You can also mount PPC-A35-133 with panel mounting method (guide).

> **Attention**
>
> Please make sure the display is not exposed to high pressure when mounting into an enclosure.

Mechanical Specifications

For PPC-A35-133, the outer mechanical dimensions are 355 x 225 x 55mm (W x L x H).

The cutout dimensions of this 13.3 inch product is 344mm x 214mm.

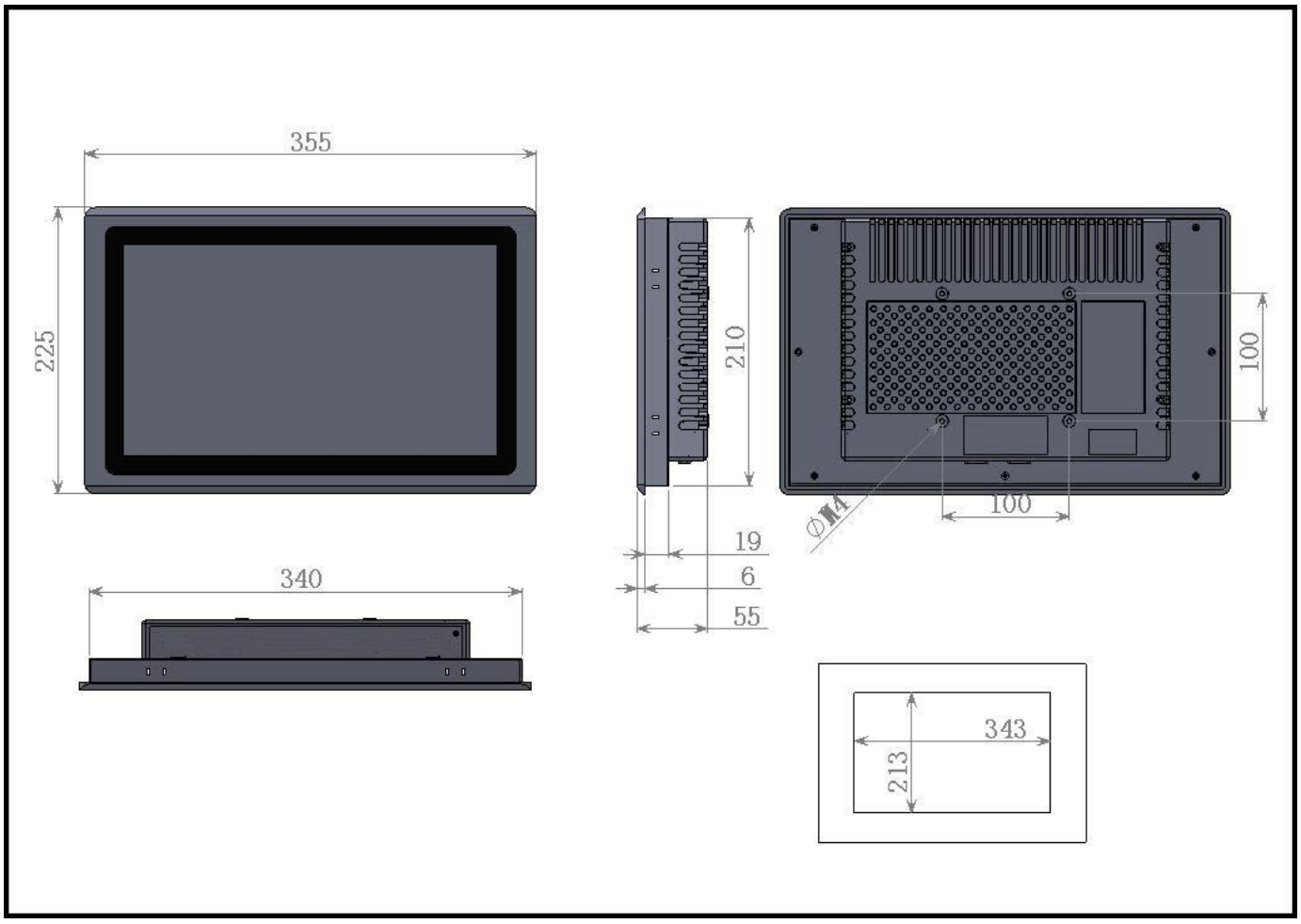

Dimensions (PPC-A35-133)

Disclaimer

This document is provided strictly for informational purposes. Its contents are subject to change without notice. Chipsee assumes no responsibility for any errors that may occur in this document. Furthermore, Chipsee reserves the right to alter the hardware, software, and/or specifications set forth herein at any time without prior notice and undertakes no obligation to update the information contained in this document.

While every effort has been made to ensure the accuracy of the information contained herein, this document is not guaranteed to be error-free. Further, it does not offer any warranties or conditions, whether expressed orally or implied in law, including implied warranties and conditions of merchantability or fitness for a particular purpose. We specifically disclaim any liability with respect to this document, and no contractual obligations are formed either directly or indirectly by this document.

Despite our best efforts to maintain the accuracy of the information in this document, we assume no responsibility for errors or omissions, nor for damages resulting from the use of the information herein. Please note that Chipsee products are not authorized for use as critical components in life support devices or systems.

Technical Support

If you encounter any difficulties or have questions related to this document, we encourage you to refer to our other documentation for potential solutions. If you cannot find the solution you're looking for, feel free to contact us. Please email Chipsee Technical Support at **support@chipsee.com**, providing all relevant information. We value your queries and suggestions and are committed to providing you with the assistance you require.