Chipsee

Industrial PC

EPC/PPC-A9-101-C

PN: CS12800F101

Content can change at anytime, check our website for latest information of this product.
www.chipsee.com

Contents

EPC/PPC-A9-101-C 3

1. Product Overview 7

2. Ordering Options 8

2.1. Operating System 8

2.2. Optional Features 9

3. Hardware Features 10

4. Power Input 12

5. Touch Screen 13

6. Connectivity 14

6.1. RS232/RS485/CAN 14

6.2. USB Connectors 16

6.3. LAN Connectors 17

6.4. WiFi & BT Module 18

6.5. 4G/LTE Module 19

6.6. GPIO Connector 21

6.7. Camera Connector 24

7. TF Card Slot 25

8. Audio Connectors 26

9. HDMI Connector 27

10. Boot DIP Switch 28

11. Mounting Procedure 29

11.1. EPC-A9-101-C 29

11.2. PPC-A9-101-C 29

12. Mechanical Specifications 31

12.1. EPC-A9-101-C 31

12.2. PPC-A9-101-C 31

13. 3D Model 33

14. Disclaimer 34

15. Technical Support 34

EPC/PPC-A9-101-C

Front View

Rear View

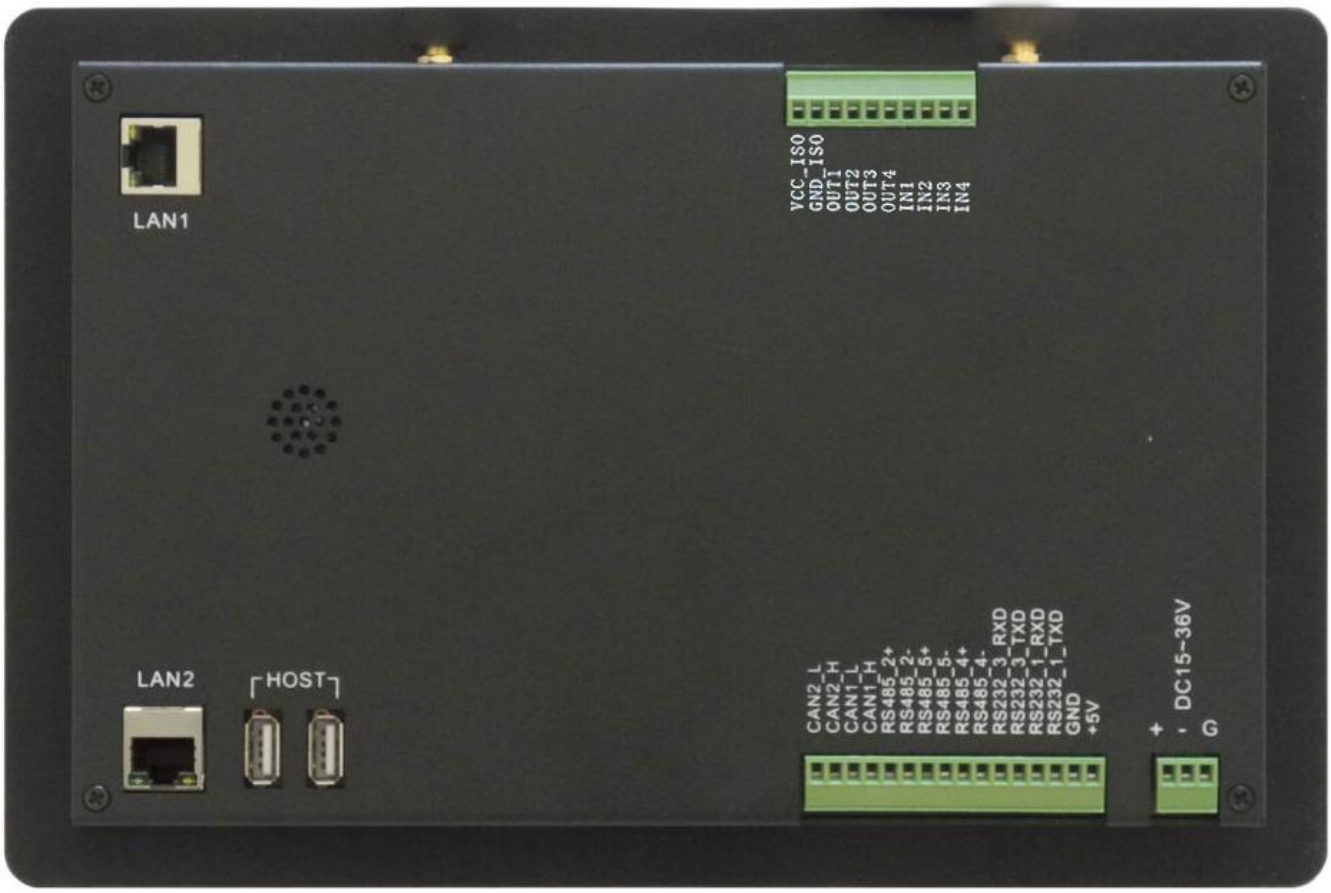
LAN1
VCC_ISO
GND_ISO
OUT1
OUT2
OUT3
OUT4
IN1
IN2
IN3
IN4
LAN2
HOST
CAN2_L
CAN2_H
CAN1_L
CAN1_H
RS485_2+
RS485_2-
RS485_5+
RS485_5-
RS485_4+
RS485_4-
RS232_3_RXD
RS232_3_TXD
RS232_1_RXD
RS232_1_TXD
GND
+5V
+
-
DC15-36V
G

Front View (Embedded Variant)

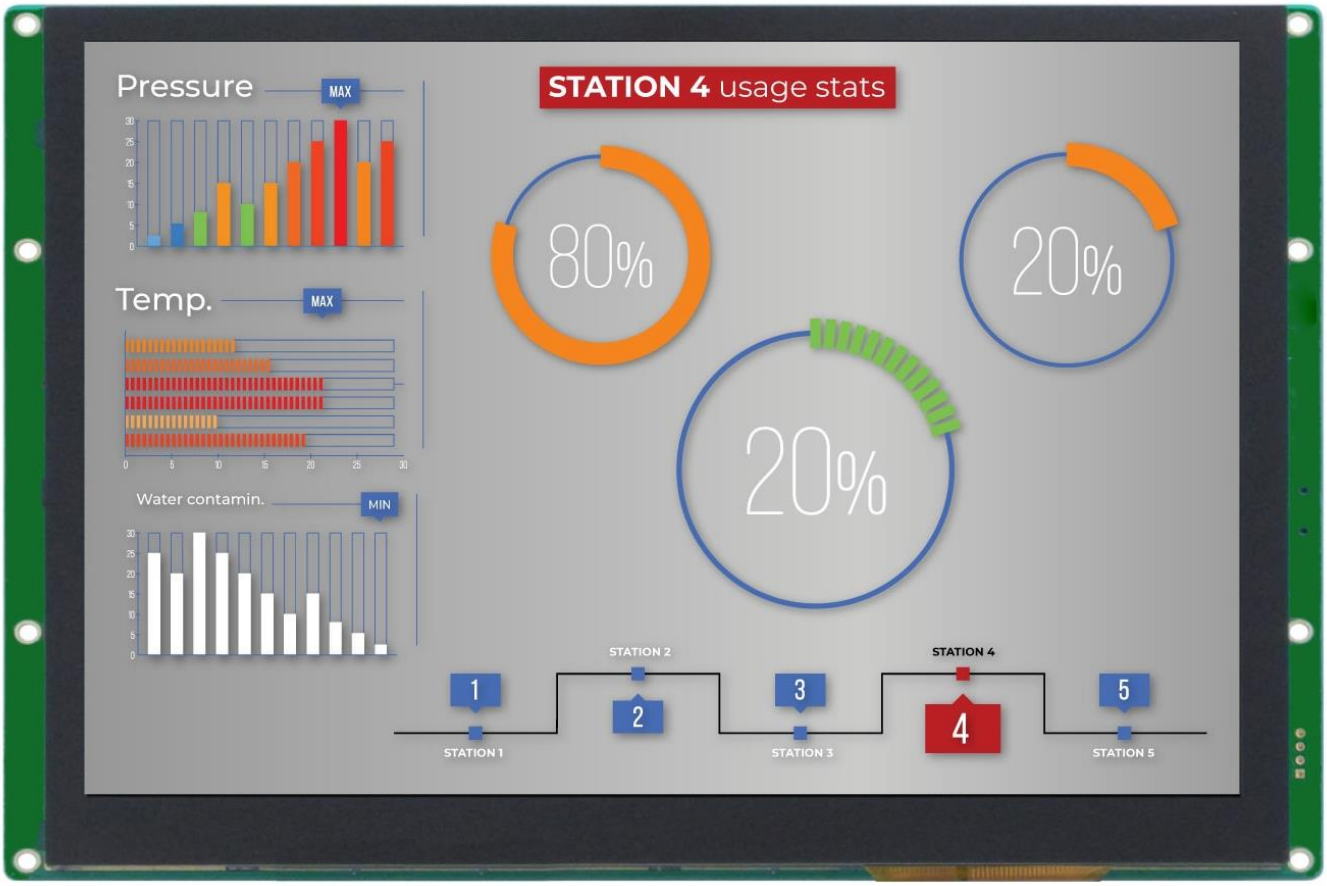

Rear View (Embedded Variant)

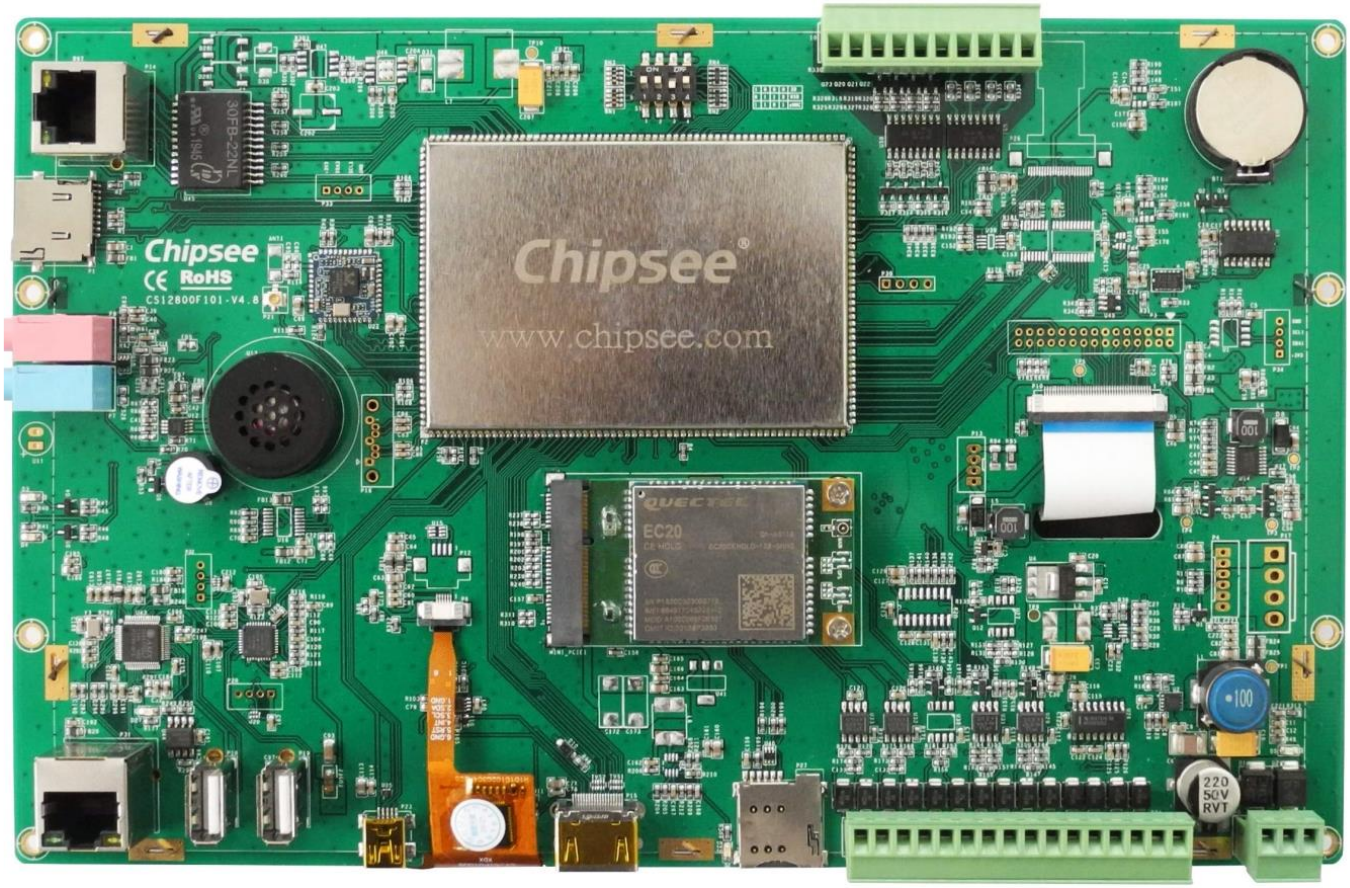

Product Overview

The Cortex®-A9 series EPC/PPC-A9-101-C (PN: CS12800F101) is a rugged, high-quality industrial panel PC. This single board computer features a 10.1” multi-point capacitive touch screen with a resolution of 1280 x 800 pixels.

Key Applications

- Human Machine Interface HMI
- Process Control
- Process Monitoring
- HMI
- Infotainment
- Predictive Maintenance
- Machine Learning
- Machine Vision
- Automotive applications
- ATM...

It is available both as an embedded solution and as a device hosed in an aluminum casing with bezels, thus facilitating different installation options:

- Installation on an industrial cabinet
- Integration with the existing equipment

The EPC/PPC-A9-101-C Industrial Panel PC is based around the powerful CS-SOM-iMX6Q System on Module (SoM), powered by the i.MX6Q Arm® Cortex®-A9 quad-core Application Processor (APU). The i.MX6Q APU represents the latest achievement in integrated multimedia applications processors, delivering high-performance computing, an abundance of integrated peripherals, and high power efficiency.

This product also features a broad range of connectivity options, providing a high level of scalability for various use cases. It is the perfect solution for power-constrained applications on the Edge, acting as a robust control unit for collecting, processing, and aggregating field data. The i.MX6Q APU is part of NXP’s EdgeVerse™ edge computing platform.

The NXP i.MX6UL APU does not generate extensive heat, so even the thin aluminum housing on PPC version delivers sufficient thermal dissipation. With its junction temperature from -40 to +125°C, the APU itself is well suited for extended temperature range in both automotive and factory environments.

Ordering Options

Chipsee products can be customized during the ordering process. The product will be shipped with the pre-installed factory defaults if no extra requirements are specified. The table in the Hardware Features section provides information about the default options bundled with the product.

> **Note**
>
> You can order EPC/PPC-A9-101-C from the official Chipsee Store or from your nearest distributor.

Operating System

This product comes with a pre-installed OS of your choice. Please see the list below for the supported OSes, which can be also obtained from the Software Documentation section, along with the detailed installation instructions.

- Chipsee Linux*
- Android 4.3
- Android 6.0
- Android 8.0
- Ubuntu 12.04
- Ubuntu 14.04
- Debian

---

* Chipsee Linux is based on NXP Yocto framework that has been integrated with:

1. Chipsee Hardware Test Application
2. An initialization script for GPIO/Buzzer/Audio
3. Multiple libraries, such as the `libQt5Sql` to develop Qt application with SQL
4. Various packages, such as the `ntfs-3g` to use NTFS file system

> **Warning**
>
> The Software Documentation section provides a detailed instruction how to install different OS on your own. However, bear in mind that Chipsee can't take the responsibility of inadequate installation procedure. If you "brick" your device, please contact Chipsee Technical Support at **support@chipsee.com** for further assistance.

Optional Features

The EPC/PPC-A9-101-C Industrial Panel PC does not include 4G/LTE module by default. The module is optional and can be selected at the Chipsee store during the ordering process.

> **Warning**
>
> Installation, repair, and maintenance tasks should be performed by trained personnel only.
> Chipsee does not bear any responsibility for damage caused by inadequate handling of the product.

Hardware Features

The EPC/PPC-A9-101-C Industrial Panel PC offers a board range of performance and connectivity options for scalable integration, providing expandability according to future needs. Some of the key features are listed in the table below.

EPC/PPC-A9-101-C	
CPU	iMX6Q, Arm® Cortex®-A9, 1GHz
RAM	2GB DDR3
eMMC	8GB
Storage	TF Card, Supports up to 32GB SDHC
Display	10.1" LCD, 1280 x 800, High Brightness: 500cd/m^2
Touch	Capacitive Multi-Point Touch Screen
USB	2 x USB 2.0 HOST, 1 x USB OTG
LAN	2 x RJ45: 1 x GbE, Optional PoE Support; 1 x 100Mbps, Optional
Audio	3.5mm Audio In/Out Connector, Internal 2W Speaker
Buzzer	Yes
RTC	Yes, Powered by CR2032 Button Battery
RS232	2 x RS232
RS485	3 x RS4851
CAN	2 x CAN
GPIO	8 x General Purpose I/O (GPIO) channels
WiFi/BT	Integrated WiFi/BT Module
HDMI	1 x HDMI
SATA	1 x SATA II
Expansion Port	N/A
4G/LTE	Optional, Not mounted by default
Power Input	From 12V to 36V
Current at 15V	600mA Max (w/o 4G Module)
Power Consumption	7W Typical
Working Temperature	From -20°C to +70°C
OS	Multiple Choices (Operating System)
Dimensions	EPC-A9-101-C (PN: CS12800F101E): 245 x 155 x 11mm
	PPC-A9-101-C (PN: CS12800F101P): 280 x 185.5 x 27.5mm

EPC/PPC-A9-101-C	
Weight	EPC-A9-101-C (PN: CS12800F101E): 600g
	PPC-A9-101-C (PN: CS12800F101P): 1410g
Mounting	EPC-A9-101-C (PN: CS12800F101E): Embedded
	PPC-A9-101-C (PN: CS12800F101P): Panel

Table 11 Key Features

1 This product has 5 x UART channels in total. The default configuration is 2 x RS232, 2 x RS485, and 1 x UART for WiFi/BT module. UART can be swapped between RS232 and RS485 modes easily, so if you need different RS232/RS485 configuration, please get in touch with the Chipsee Technical Support at **support@chipsee.com**

Power Input

The EPC/PPC-A9-101-C Industrial Panel PC can be powered by a wide range of input voltages: From 12V to 36V DC. The power input connector is a **3-pin, 3.81mm terminal**. The polarity and the pinout is clearly marked on the housing of the PPC version, as well as on the PCB itself of the EPC version, as shown in the figure below.

Figure 33: *Power Input Section (embedded/enclosed version)*

Note that the "**+**" sign represents the positive power input, and it is printed both at the casing and as a silk-screen on a PCB of the embedded version. The "**-**" terminal is shorted to the ground.

Power Input Definition		
Pin Number	**Definition**	**Description**
Pin 1	Positive Input	DC Power **Positive Terminal**
Pin 2	Negative Input	DC Power **Negative Terminal**
Pin 3	Ground	**Power System Ground**

Table 12 Power Connector

> **Note**
>
> The system ground "**G**" is connected to power negative "**-**" on board.

Touch Screen

The EPC/PPC-A9-101-C Industrial Panel PC uses a ten-point multitouch capacitive screen. *Figure 2* shows the capacitive screen connected to the motherboard via the **FPC connector**.

Figure 34: *Figure 2: Capacitive Screen Connector*

Attention

A capacitive touch screen is susceptible to power noise and Electromagnetic Radiation (EMR). It may cause LCD ripples or even capacitive touch malfunction. If using a capacitive multitouch test application, you might notice the touch points float erratically across the display. There are several solutions to this problem:

1. Use a high-quality Power Adapter Unit (PSU) with low EMR. You can also provide power from a battery.
2. Make sure that the EPC/PPC-A9-101-C Power Input connector (pin 3) is properly connected to the Power System Ground to provide sufficient EMI shielding and eliminate the problem entirely.
3. Bad GND problem can also be confirmed by touching pin 3 of the Power Input connector with one hand while operating the capacitive touch screen with the other hand. In this case, the operator's body acts as the Power System Ground.

Connectivity

There are many connectivity options available on the EPC/PPC-A9-101-C industrial PC. It has 2 x HOST USB Type A connectors, 1 x USB OTG Type Mini B, 2 x network connector (RJ45) supporting up to 1 Gbps, and 5 x UART terminals (RS232/485). This device also features two CAN interfaces.

RS232/RS485/CAN

The serial communication interfaces (RS485, RS232, and CAN) are routed to a **16-pin 3.81mm terminal**, as illustrated in the figure below. Serial communication on both RS485 and RS232 interfaces can reach up to 115200 kbps.

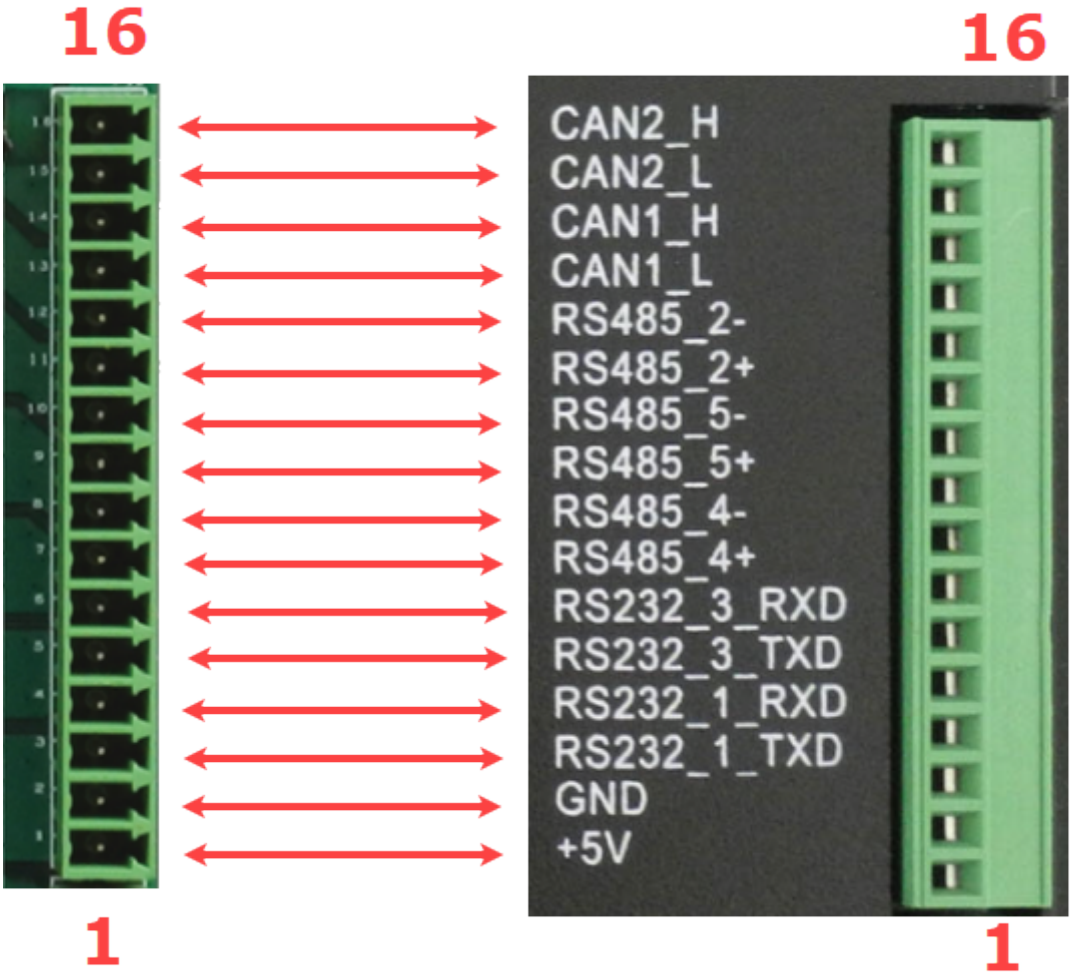

Figure 35: *Serial pins connector*

The table below offers more detailed description of every pin and its definition:

RS232 / RS485 / CAN Pin Definition:		
Pin Number	**Definition**	**Description**
Pin 16	CAN2_H	CPU CAN Channel 2 H signal

Pin 15	CAN2_L	CPU CAN Channel 2 L signal
Pin 14	CAN1_H	CPU CAN Channel 1 H signal
Pin 13	CAN1_L	CPU CAN Channel 1 L signal
Pin 12	RS485_2-	CPU UART2, RS485 –(B) signal 2
Pin 11	RS485_2+	CPU UART2, RS485 +(A) signal 2
Pin 10	RS485_5-	CPU UART5, RS485 –(B) signal
Pin 9	RS485_5+	CPU UART5, RS485 +(A) signal
Pin 8	RS485_4-	CPU UART4, RS485 –(B) signal
Pin 7	RS485_4+	CPU UART4, RS485 +(A) signal
Pin 6	RS232_3_RXD	CPU UART3, RS232 RXD signal
Pin 5	RS232_3_TXD	CPU UART3, RS232 TXD signal
Pin 4	RS232_1_RXD	CPU UART1, RS232 RXD signal
Pin 3	RS232_1_TXD	CPU UART1, RS232 TXD signal
Pin 2	GND	System Ground
Pin 1	+5V	System 5V output, up to 1A

Table 13 Connectivity Section

2(1,2)UART2 signal is used by the onboard WiFi/BT module, so the I/O port function is disabled by default. If you need the I/O port function instead, please contact Chipsee Technical Support at **support@chipsee.com** for assistance.

Note

120Ω termination resistors are not mounted or included with the device.

USB Connectors

There are 2 x Type A **USB HOST connectors** onboard, as shown on the figure below.

Figure 36: *USB HOST Connectors (embedded/enclosed PC version)*

There is also 1 x Type Mini B **USB OTG connector**, configured as slave by default.

Figure 37: *USB OTG Connector (embedded/enclosed PC version)*

> **Warning**
>
> Be careful not to touch surrounding electronic components accidentally while plugging in USB devices into the embedded IPC version.

LAN Connectors

LAN (RJ45) connector provides Ethernet connectivity over standardized Ethernet cables. The integrated Ethernet interface supports up to 1 Gbps data throughput. Power over Ethernet (PoE) is not supported.

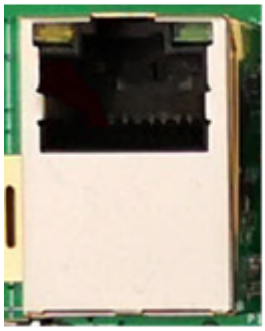

Figure 38: *RJ45 LAN Connectors (embedded/enclosed PC version)*

Note

Use CAT5 or better cables to achieve full data throughput over maximum distance defined by the 1000BASE-T standard (100m).

WiFi & BT Module

The EPC/PPC-A9-101-C Industrial Panel PC is equipped with the popular **Realtek RTL8723 WiFi/BT module** that supports BT/BLE 4.0 (with backward compatibility), as well as 802.11bgn 2.4 GHz Wireless LAN (WLAN).

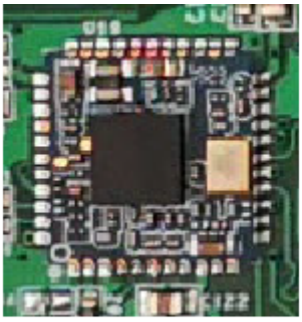

Figure 39: *RTL8273 WiFi/BT Module*

The enclosed (PPC) variant of the product also includes an SMA connector for an external WiFi/BT antenna, as illustrated in the figure below.

Figure 40: *WiFi+BT Antenna*

4G/LTE Module

The EPC/PPC-A9-101-C Industrial Panel PC is equipped with a **mini-PCIe connector** that can connect to a 4G/LTE module. The customer will also need a SIM Card Holder and a 4G/LTE Antenna Connector to ensure 4G/LTE works on the EPC/PPC-A9-101-C. SIM card does **NOT** support hot plug. **Power off** before inserting or removing SIM card.

Figure 41: *4G/LTE Module*

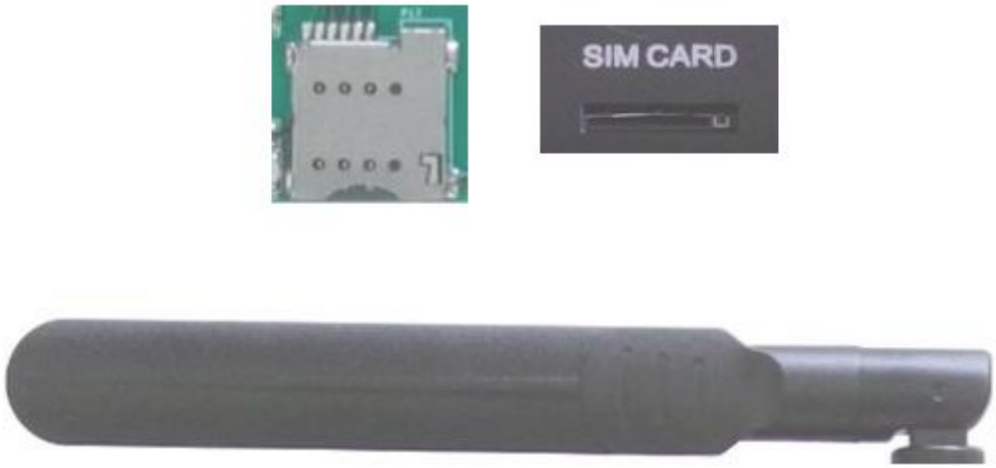

Figure 42: *SIM Card Holder and 4G/LTE Antenna Connector*

SIM Card Direction

Attention

The product does not come shipped with the 4G/LTE module by default.

GPIO Connector

The EPC/PPC-A9-101-C Industrial Panel PC has a 10 Pin 3.81mm **GPIO Connector**, as shown in the figure below, that is labeled as P28 on the PCB. The table below gives details about the definition of every Pin.

GPIO Connector

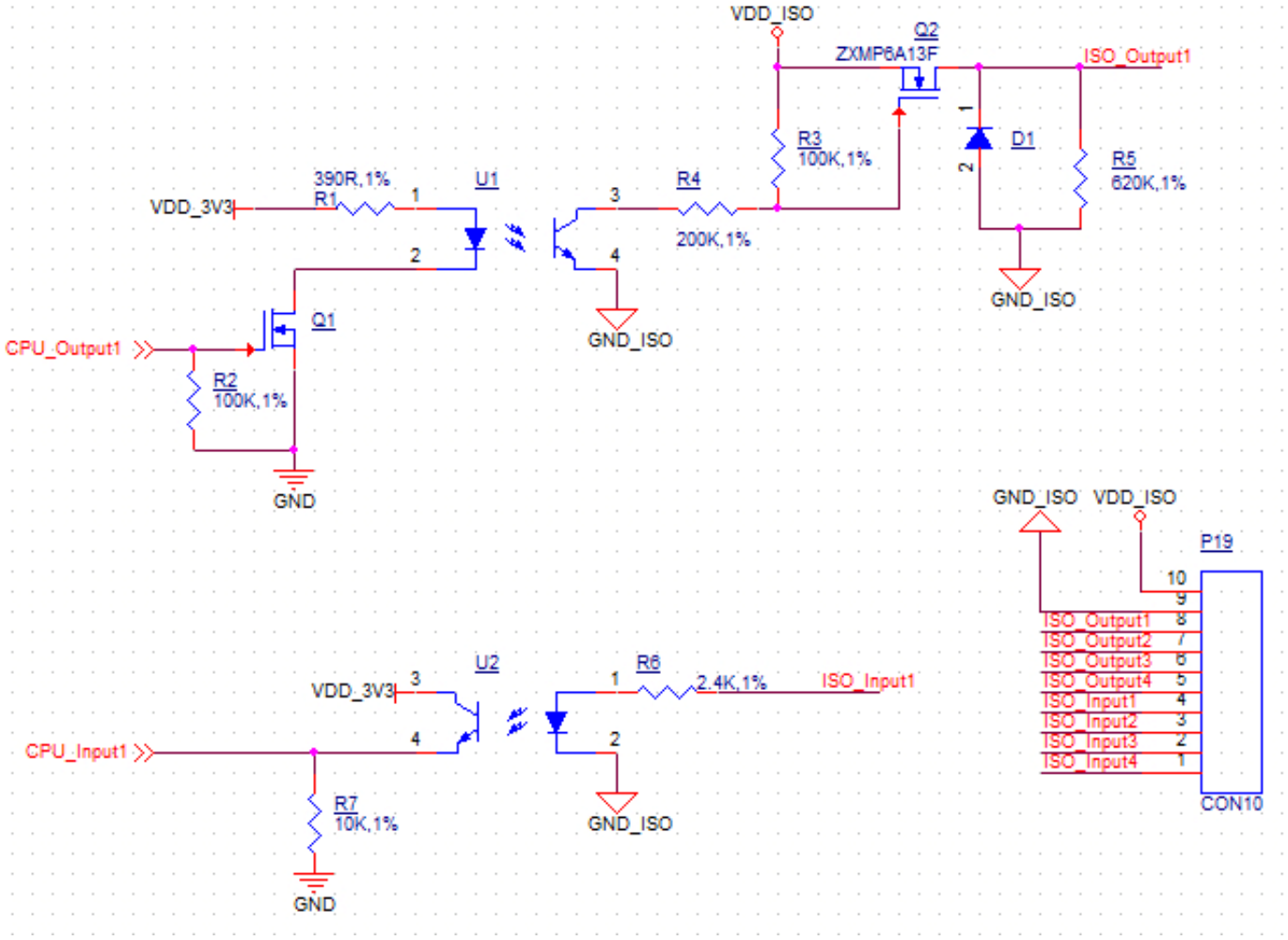

Isolated GPIO reduced schematic

GPIO Connector Pin Definition:		
Pin Number	**Definition**	**Description**
Pin 1	VCC_ISO	Isolated Power Input (+5V – +24V)
Pin 2	GND_ISO	Isolated Ground
Pin 3	OUT1	Isolated Output 1
Pin 4	OUT2	Isolated Output 2
Pin 5	OUT3	Isolated Output 3
Pin 6	OUT4	Isolated Output 4
Pin 7	IN1	Isolated Input 1
Pin 8	IN2	Isolated Input 2
Pin 9	IN3	Isolated Input 3
Pin 10	IN4	Isolated Input 4

Table 14 GPIO Connector Pin-out

Attention

- The GPIO has been Opt-Isolated and it uses the 24V Logic by default. You can use an external isolated power input but the power input range should be from 5V to 24V DC.
- The 4 output channels can drive at most 500mA current on each channel.

Camera Connector

The EPC/PPC-A9-101-C Industrial Panel PC supports a one channel CMOS camera, as shown on the figure below. The camera connector supports camera OV2659 and OV5640. It is labeled as P26 on the PCB.

Figure 43: *Camera Connector*

Attention

The camera is not mounted by default.

TF Card Slot

The EPC/PPC-A9-101-C Industrial Panel PC features 1 x **TF Card (micro SD) slot**. It can address up to 32GB of memory.

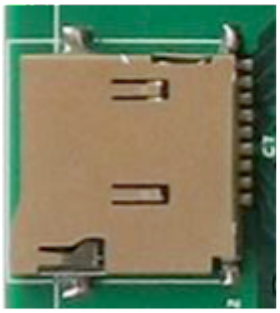

Figure 44: *TF (micro SD) Card Slot*

> **Note**
>
> The product does not come shipped with the TF Card by default

Audio Connectors

The EPC/PPC-A9-101-C Industrial Panel PC features some audio peripherals, as well. It has 1 x **3.5mm audio input jack** and 1 x **3.5mm audio output jack**.

On the embedded panel PC version, the pink connector is the audio input jack (line-in) and the blue connector is the audio output jack (line-out, typically around -10 dBV). On the enclosed panel PC version, both audio input and audio output are clearly marked.

Figure 45: *Audio I/O (embedded/enclosed PC version)*

In addition, EPC/PPC-A9-101-C features a miniature 2W embedded speaker for audio reproduction, as well as a small buzzer for alarm/notification sounds.

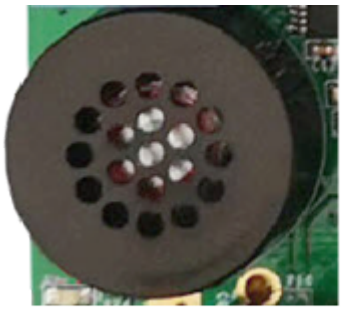

Figure 46: *2W Micro Speaker and Buzzer*

HDMI Connector

The EPC/PPC-A9-101-C Industrial Panel PC is equipped with 1 x **HDMI connector**. The HDMI connector allows connecting an additional (external) monitor. HDMI output resolution can be configured by the software.

Figure 47: *HDMI Connector*

Boot DIP Switch

The EPC/PPC-A9-101-C Industrial Panel PC supports boot from SD card. If you want to re-flash the Operating System (OS), you can use the TF card for that purpose, combined with the **DIP switch** settings.

There is no need to alter the DIP switch settings during regular operation. However, if you need to reinstall the OS, please refer to the table below. Detailed information on how to re-flash the OS can be found in the Software Documentation.

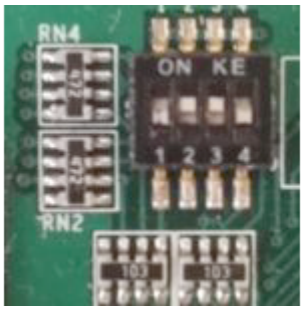

Figure 48: *Boot DIP Switch*

Boot Config Select				
DIP SW	**1**	**2**	**3**	**4**
SD	1	0	0	0
eMMC	1	1	0	1
Download	0	1	1	0

Table 15 Boot Configuration Selection

Mounting Procedure

The EPC/PPC-A9-101-C Industrial Panel PC can be mounted with 8 x M4 screws, enabling simplified installation onto any standard mounting fixture.

EPC-A9-101-C

You can mount EPC-A9-101-C with the Embedded mounting method, as shown on the figure below.

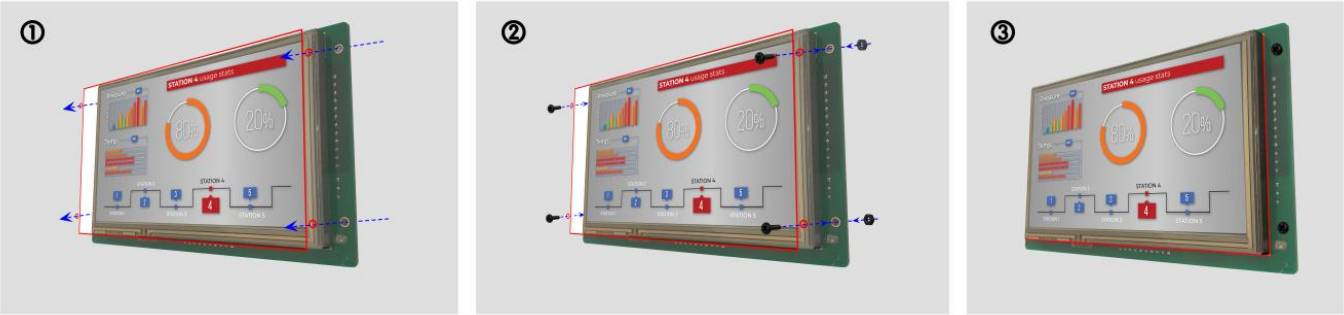

Figure 49: *Embedded mounting*

PPC-A9-101-C

You can mount PPC-A9-101-C with the Panel mounting method, as shown on the figure below. The grey area indicates your equipment or your machine that you want the Chipsee device to be panel mounted into. To learn more you can jump below to view the 3D viewer of this product, there are mounting screws provided by Chipsee to help you mount this device.

Figure 50: *Panel mounting*

Note

With the PPC-A9-101-C industrial PC, the operator can fix the PC into the panel by pushing it from the front inside the panel as described in the figure above. The recommended maximum thickness of the panel material is 8mm.

1. Make sure the Panel PC is configured correctly. The Boot Switch is sitting inside the housing. To use it, the Panel PC has to be unmounted from the panel.
2. Push the Panel PC straight into the Panel Hole until the unit sits flat on the panel as shown in the figure above.
3. Use the mounting fixtures to lock the Panel PC into it's place.

Attention

Please make sure the display is not exposed to high pressure when mounting into an enclosure.

You can find detailed information about mounting in the Mount IPC Guide.

Mechanical Specifications

EPC-A9-101-C

The outer mechanical dimensions of EPC-A9-101-C are 245 x 155 x 11mm (W x L x H). Please refer to the technical drawing in the figure below for details related to the specific product measurements.

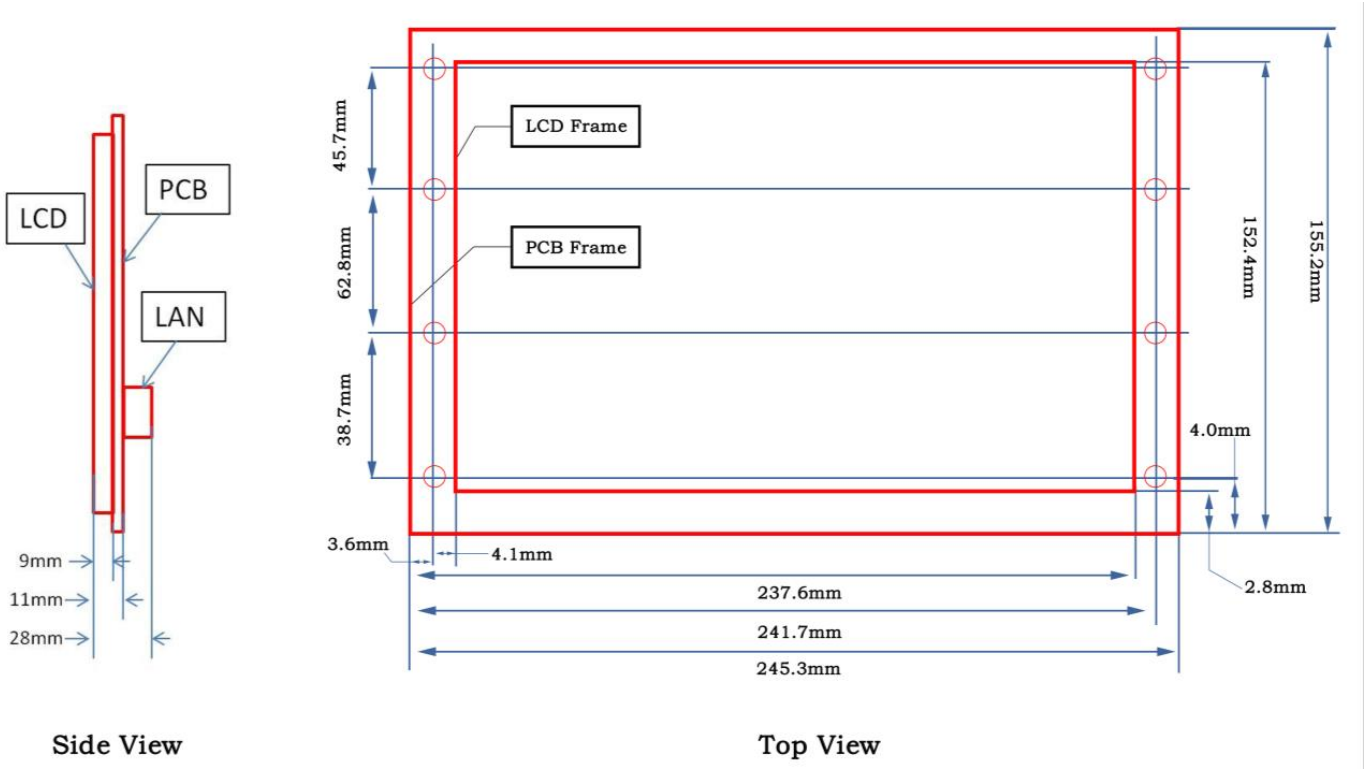

Figure 51: EPC-A9-101-C *Technical Drawing*

PPC-A9-101-C

For PPC-A9-101-C, the outer mechanical dimensions are 280 x 185.5 x 27.5mm (W x L x H). Please refer to the technical drawing in the figure below for details related to the specific product measurements.

Figure 52: PPC-A9-101-C *Technical Drawing*

Caution

- When you use product EPC-A9-101-C, you should not touch the circuit board on the back of the product if the product is powered ON.
- Also, when the product is powered OFF, please take anti-static measures before touching the circuit board.

3D Model

EPC/PPC-A9-101-C 3D model can be viewed in the online doc in a web browser, **if you are reading from the PDF** version, please visit the online doc EPC/PPC-A9-101-C, select hardware documentation, drag the navigation bar to the 3D Model section.

Disclaimer

This document is provided strictly for informational purposes. Its contents are subject to change without notice. Chipsee assumes no responsibility for any errors that may occur in this document. Furthermore, Chipsee reserves the right to alter the hardware, software, and/or specifications set forth herein at any time without prior notice and undertakes no obligation to update the information contained in this document.

While every effort has been made to ensure the accuracy of the information contained herein, this document is not guaranteed to be error-free. Further, it does not offer any warranties or conditions, whether expressed orally or implied in law, including implied warranties and conditions of merchantability or fitness for a particular purpose. We specifically disclaim any liability with respect to this document, and no contractual obligations are formed either directly or indirectly by this document.

Despite our best efforts to maintain the accuracy of the information in this document, we assume no responsibility for errors or omissions, nor for damages resulting from the use of the information herein. Please note that Chipsee products are not authorized for use as critical components in life support devices or systems.

Technical Support

If you encounter any difficulties or have questions related to this document, we encourage you to refer to our other documentation for potential solutions. If you cannot find the solution you're looking for, feel free to contact us. Please email Chipsee Technical Support at **support@chipsee.com**, providing all relevant information. We value your queries and suggestions and are committed to providing you with the assistance you require.