Chipsee

Industrial PC

PPC-A9-190-C

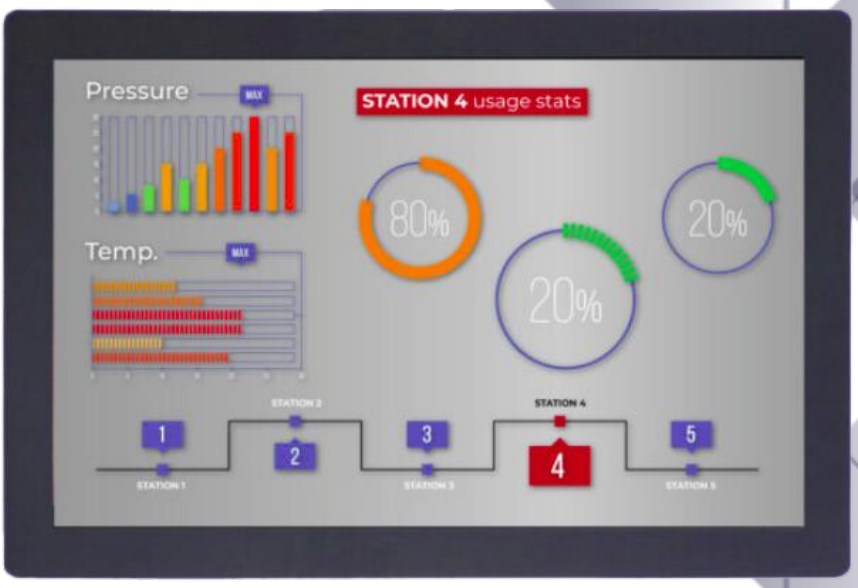

PN: CS14900F190

Content can change at anytime, check our website for latest information of this product.
www.chipsee.com

Contents

PPC-A9-190-C 3

1. Product Overview 7

2. Ordering Options 8

2.1. Operating System 8

2.2. Optional Features 9

3. Hardware Features 10

4. Power Input 12

5. Touch Screen 14

6. Connectivity 15

6.1. RS232/RS485/CAN 15

6.2. USB Connectors 17

6.3. LAN Connectors 18

6.4. WiFi & BT Module 19

6.5. 4G/LTE Module 20

6.6. GPIO Connector 21

7. Audio Connectors 24

8. HDMI Connector 25

9. Boot DIP Switch 26

10. Measurements and Mounting Procedure 27

11. Disclaimer 28

12. Technical Support 28

PPC-A9-190-C

Front View

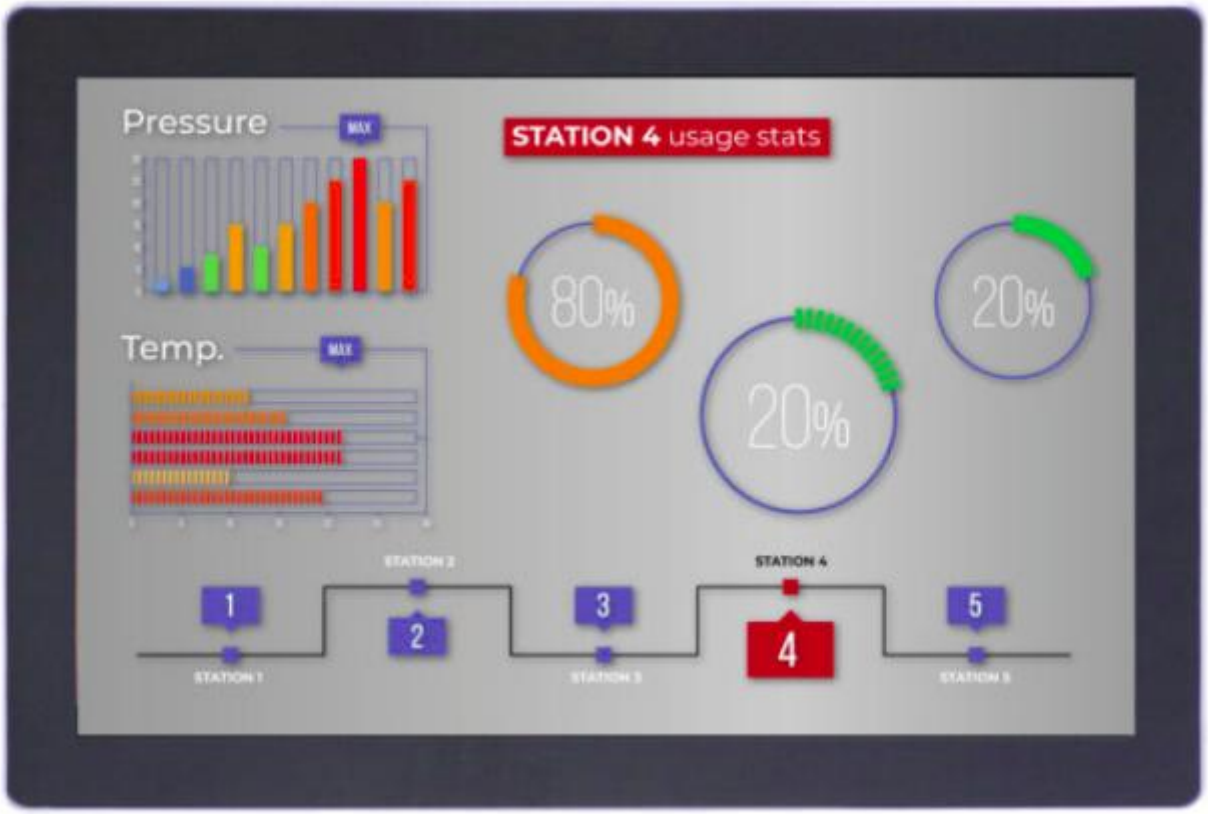

Rear View

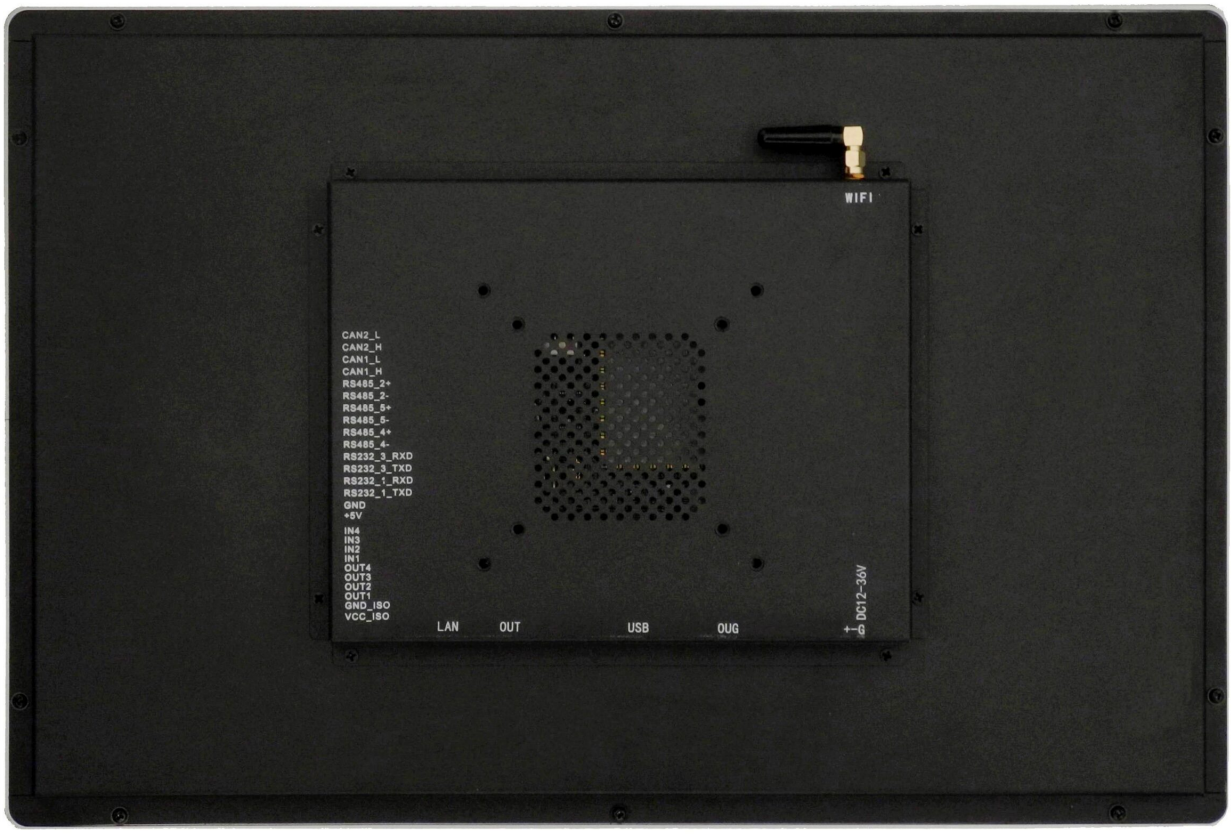
WIFI
CAN2_L
CAN2_H
CAN1_L
CAN1_H
RS485_2+
RS485_2-
RS485_5+
RS485_5-
RS485_4+
RS485_4-
RS232_3_RXD
RS232_3_TXD
RS232_1_RXD
RS232_1_TXD
GND
+5V
IN4
IN3
IN2
IN1
OUT4
OUT3
OUT2
OUT1
GND_ISO
VCC_ISO
LAN
OUT
USB
OUG
DC12-36V

Side View 1

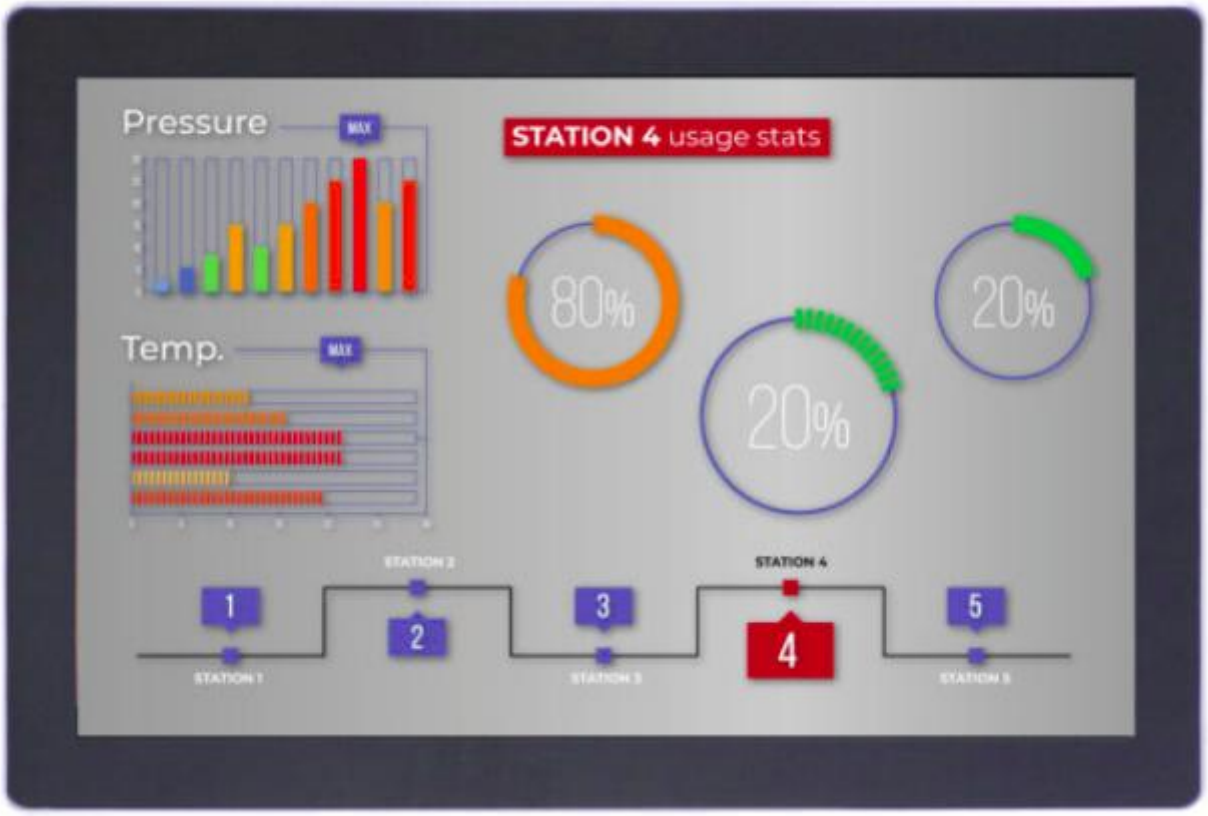
Pressure
MAX
STATION 4 usage stats
80%
20%
20%
Temp.
MAX
STATION 2
STATION 4
1
2
3
4
5

Side View 2

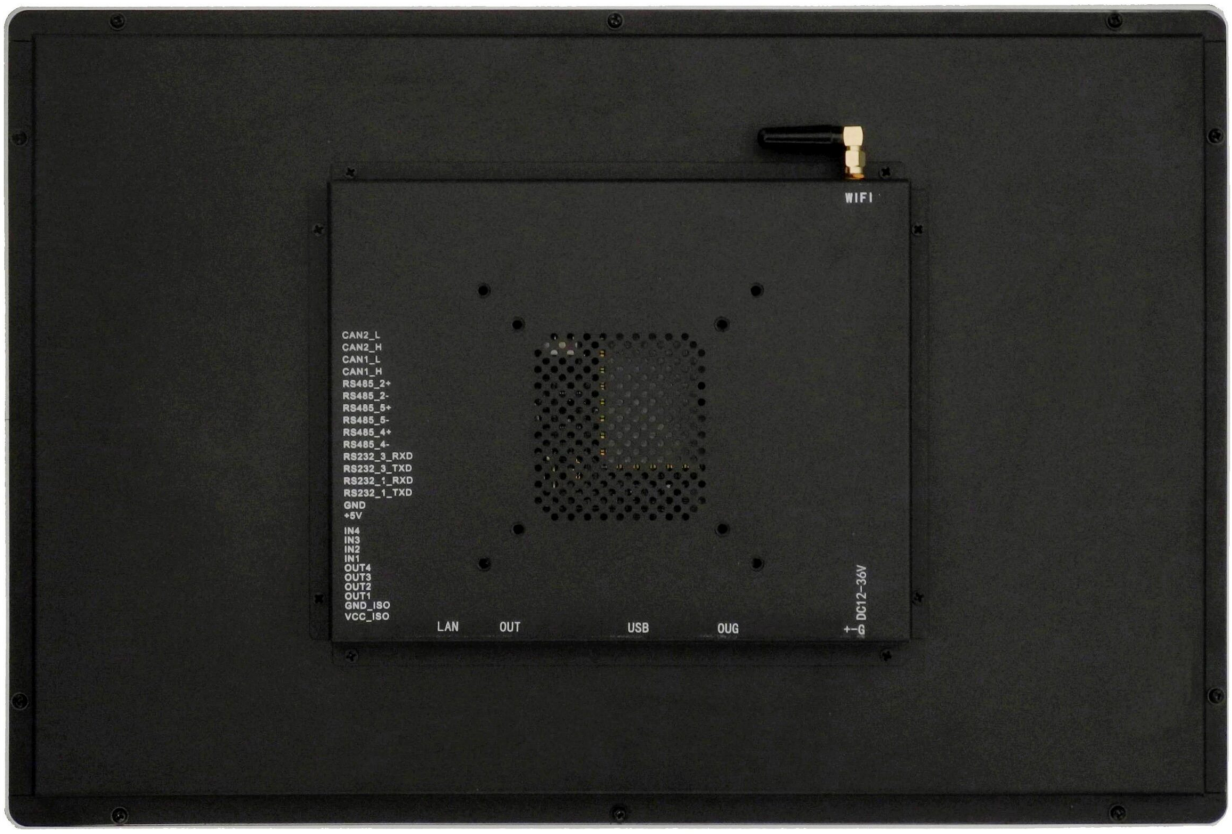
WIFI
CAN2_L
CAN2_H
CAN1_L
CAN1_H
RS485_2+
RS485_2-
RS485_5+
RS485_5-
RS485_4+
RS485_4-
RS232_3_RXD
RS232_3_TXD
RS232_1_RXD
RS232_1_TXD
GND
+5V
IN4
IN3
IN2
IN1
OUT4
OUT3
OUT2
OUT1
GND_ISO
VCC_ISO
LAN
OUT
USB
OUG
DC12-36V

Product Overview

The Cortex®-A9 series PPC-A9-190-C (PN: CS14900F190) is a rugged, high-quality industrial panel PC. This single board computer features a 19” multi-point capacitive touch screen with a resolution of 1440 x 900 pixels.

Key Applications

- Human Machine Interface HMI
- Process Control
- Process Monitoring
- HMI
- Infotainment
- Predictive Maintenance
- Machine Learning
- Machine Vision
- Automotive applications
- ATM...

The PPC-A9-190-C Industrial Panel PC is based around the powerful CS-SOM-iMX6Q System on Module (SoM), powered by the i.MX6Q Arm® Cortex®-A9 quad-core Application Processor (APU). The i.MX6Q APU represents the latest achievement in integrated multimedia applications processors, delivering high-performance computing, an abundance of integrated peripherals, and high power efficiency.

This product also features a broad range of connectivity options, providing a high level of scalability for various use cases. It is the perfect solution for power-constrained applications on the Edge, acting as a robust control unit for collecting, processing, and aggregating field data. The i.MX6Q APU is part of NXP’s EdgeVerse™ edge computing platform.

The NXP i.MX6UL APU does not generate extensive heat, so even the thin aluminum housing on PPC version delivers sufficient thermal dissipation. With its junction temperature from -40 to +125°C, the APU itself is well suited for extended temperature range in both automotive and factory environments.

Ordering Options

Chipsee products can be customized during the ordering process. The product will be shipped with the pre-installed factory defaults if no extra requirements are specified. The table in the Hardware Features section provides information about the default options bundled with the product.

> **Note**
>
> You can order PPC-A9-190-C from the official Chipsee Store or from your nearest distributor.

Operating System

This product comes with a pre-installed OS of your choice. Please see the list below for the supported OSes, which can be also obtained from the Software Documentation section, along with the detailed installation instructions.

- Chipsee Linux*
- Android 4.3
- Android 6.0
- Android 8.0
- Ubuntu 12.04
- Ubuntu 14.04
- Debian

---

* Chipsee Linux is based on NXP Yocto framework that has been integrated with:

1. Chipsee Hardware Test Application
2. An initialization script for GPIO/Buzzer/Audio
3. Multiple libraries, such as the `libQt5Sql` to develop Qt application with SQL
4. Various packages, such as the `ntfs-3g` to use NTFS file system

> **Warning**
>
> The Software Documentation section provides a detailed instruction how to install different OS on your own. However, bear in mind that Chipsee can't take the responsibility of inadequate installation procedure. If you "brick" your device, please contact Chipsee Technical Support at **support@chipsee.com** for further assistance.

Optional Features

The PPC-A9-190-C Industrial Panel PC does not include 4G/LTE module by default. The module is optional and can be selected at the Chipsee store during the ordering process.

> **Warning**
>
> Installation, repair, and maintenance tasks should be performed by trained personnel only.
> Chipsee does not bear any responsibility for damage caused by inadequate handling of the product.

Hardware Features

The PPC-A9-190-C Industrial Panel PC offers a board range of performance and connectivity options for scalable integration, providing expandability according to future needs. Some of the key features are listed in the table below.

PPC-A9-190-C	
CPU	iMX6Q, Arm® Cortex®-A9, 1GHz
RAM	2GB DDR3
eMMC	8GB
Storage	TF Card, Supports up to 32GB SDHC
Display	19" LCD, 1440 x 900, High Brightness: 500cd/m^2
Touch	Capacitive Multi-Point Touch Screen
USB	4 x USB 2.0 HOST, 1 x USB OTG
LAN	1 x Channel 1000Mbps LAN
Audio	3.5mm Audio In/Out Connector, Internal 2W Speaker
Buzzer	Yes
RTC	Yes, Powered by CR2032 Button Battery
RS232	2 x RS232
RS485	3 x RS4851
CAN	2 x CAN
GPIO	8 x Channels
WiFi/BT	Integrated WiFi/BT Module
HDMI	1 x HDMI
SATA	1 x SATA II
4G/LTE	Optional, Not mounted by default
Power Input	From 15V to 36V
Current at 15V	2000mA Max
Power Consumption	22W Typical
Working Temperature	From -20°C to +70°C
OS	Multiple Choices (Operating System)
Dimensions	466 x 313 x 63mm
Weight	5200g
Mounting	Panel

Table 32 Key Features

1 This product has 5 x UART channels in total. The default configuration is 2 x RS232, 2 x RS485, and 1 x UART for WiFi/BT module. UART can be swapped between RS232 and RS485 modes easily, so if you need different RS232/RS485 configuration, please get in touch with the Chipsee Technical Support at **support@chipsee.com**

Power Input

The PPC-A9-190-C Industrial Panel PC can be powered by a wide range of input voltages: From 15V to 36V DC. The power input connector is a **3-pin, 3.81mm terminal**. The polarity and the pinout is clearly marked on the housing of the product as shown on the figure below.

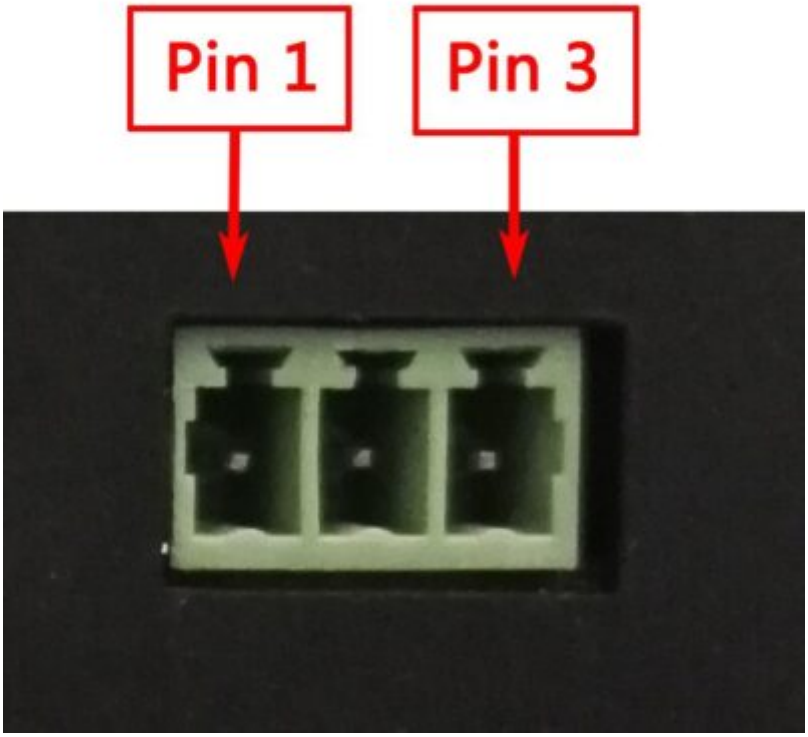

Figure 105: *Power Input*

Note that the "**+**" sign represents the positive power input, and it is printed both at the casing and as a silk-screen on a PCB of the embedded version. The "**-**" terminal is shorted to the ground.

Power Input Definition		
Pin Number	**Definition**	**Description**
Pin 1	Positive Input	DC Power **Positive Terminal**
Pin 2	Negative Input	DC Power **Negative Terminal**
Pin 3	Ground	**Power System Ground**

Table 33 Power Connector

> **Note**
>
> The system ground "**G**" is connected to power negative "**-**" on board.

Touch Screen

The PPC-A9-190-C Industrial Panel PC uses a 10-point capacitive touch screen.

Attention

A capacitive touch screen is susceptible to power noise and Electromagnetic Radiation (EMR). It may cause LCD ripples or even capacitive touch malfunction. If using a capacitive multi-touch test application, you might notice the touch points float erratically across the display. There are several solutions to this problem:

1. Use a high-quality Power Adapter Unit (PSU) with low EMR. You can also provide power from a battery.
2. Make sure that the PPC-A9-190-C Power Input connector (pin 3) is properly connected to the Power System Ground to provide sufficient EMI shielding and eliminate the problem entirely.
3. Bad GND problem can also be confirmed by touching pin 3 of the Power Input connector with one hand while operating the capacitive touch screen with the other hand. In this case, the operator's body acts as the Power System Ground.

Connectivity

There are many connectivity options available on the PPC-A9-190-C industrial PC. It has 2 x HOST USB Type A connectors, 1 x USB OTG Type Mini B, 2 x network connector (RJ45) supporting up to 1 Gbps, and 5 x UART terminals (RS232/485). This device also features two CAN interfaces.

RS232/RS485/CAN

The serial communication interfaces (RS485, RS232, and CAN) are routed to a **16-pin 3.81mm terminal**, as illustrated in the figure below. Serial communication on both RS485 and RS232 interfaces can reach up to 115200 kbps.

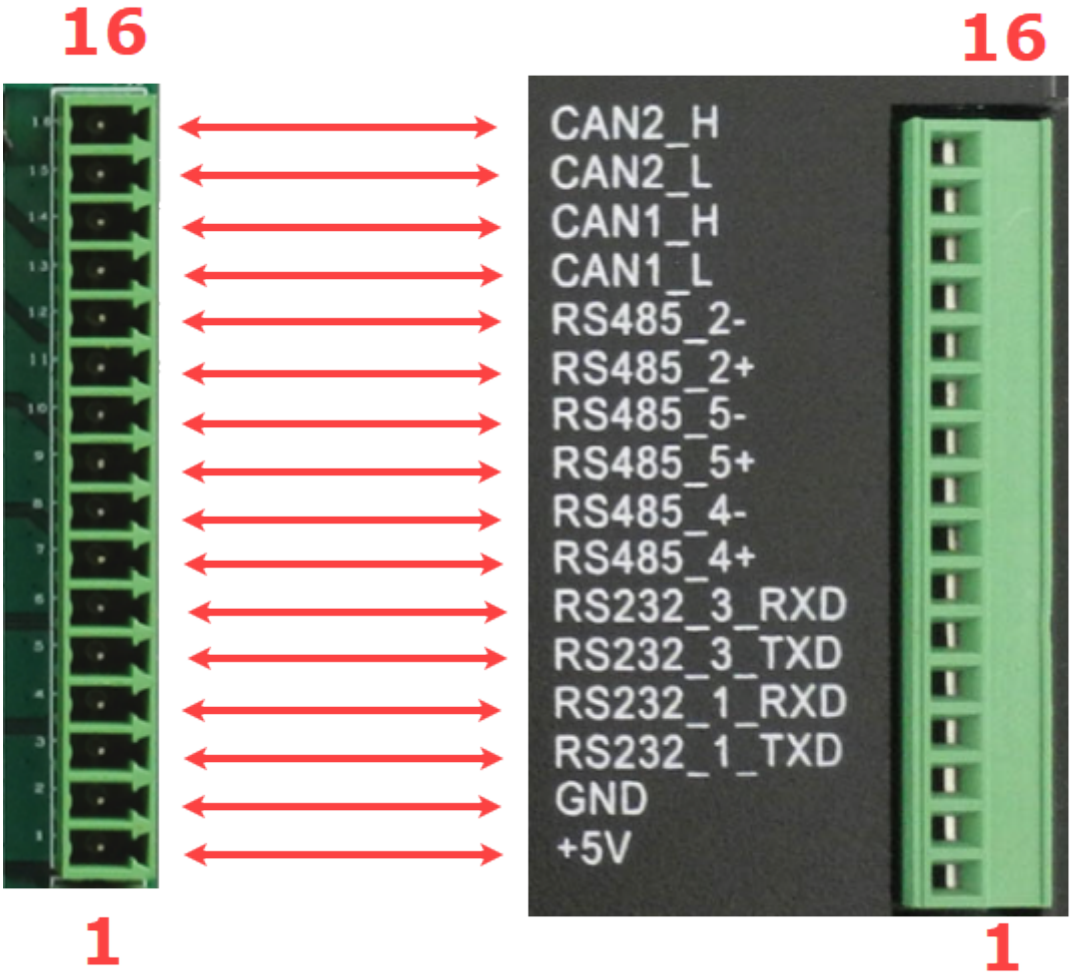

Figure 106: *Serial pins connector*

The table below offers more detailed description of every pin and its definition:

RS232 / RS485 / CAN Pin Definition:		
Pin Number	**Definition**	**Description**
Pin 16	CAN2_H	CPU CAN Channel 2 H signal

Pin 15	CAN2_L	CPU CAN Channel 2 L signal
Pin 14	CAN1_H	CPU CAN Channel 1 H signal
Pin 13	CAN1_L	CPU CAN Channel 1 L signal
Pin 12	RS485_2-	CPU UART2, RS485 –(B) signal 2
Pin 11	RS485_2+	CPU UART2, RS485 +(A) signal 2
Pin 10	RS485_5-	CPU UART5, RS485 –(B) signal
Pin 9	RS485_5+	CPU UART5, RS485 +(A) signal
Pin 8	RS485_4-	CPU UART4, RS485 –(B) signal
Pin 7	RS485_4+	CPU UART4, RS485 +(A) signal
Pin 6	RS232_3_RXD	CPU UART3, RS232 RXD signal
Pin 5	RS232_3_TXD	CPU UART3, RS232 TXD signal
Pin 4	RS232_1_RXD	CPU UART1, RS232 RXD signal
Pin 3	RS232_1_TXD	CPU UART1, RS232 TXD signal
Pin 2	GND	System Ground
Pin 1	+5V	System 5V output, up to 1A

Table 34 Connectivity Section

2(1,2)UART2 signal is used by the onboard WiFi/BT module, so the I/O port function is disabled by default. If you need the I/O port function instead, please contact Chipsee Technical Support at **support@chipsee.com** for assistance.

Note

120Ω termination resistors are not mounted or included with the device.

USB Connectors

There are 2 x dual Type A **USB HOST connectors** onboard, as shown on the figure below.

Figure 107: *USB HOST Connectors*

> **Note**
>
> The USB HOST connectors can drive at most 500mA current on each dual port.

There is also 1 x Type Mini B **USB OTG connector**, configured as slave by default.

Figure 108: *USB OTG Connector*

LAN Connectors

LAN (RJ45) connector provides Ethernet connectivity over standardized Ethernet cables. The integrated Ethernet interface supports up to 1 Gbps data throughput. Power over Ethernet (PoE) is not supported.

Figure 109: *RJ45 LAN Connector*

Note

Use CAT5 or better cables to achieve full data throughput over maximum distance defined by the 1000BASE-T standard (100m).

WiFi & BT Module

The PPC-A9-190-C Industrial Panel PC is equipped with the popular **Realtek RTL8723 WiFi/BT module** that supports BT/BLE 4.0 (with backward compatibility), as well as 802.11bgn 2.4 GHz Wireless LAN (WLAN). The product includes an SMA connector for an external WiFi/BT antenna, as illustrated in the figure below.

Figure 110: *WiFi+BT Antenna*

4G/LTE Module

The PPC-A9-190-C Industrial Panel PC is equipped with a **mini-PCIe connector** that can connect to a 4G/LTE module. The customer will also need a SIM Card Holder and a 4G/LTE Antenna Connector to ensure 4G/LTE works on the PPC-A9-190-C. SIM card does **NOT** support hot plug. **Power off** before inserting or removing SIM card.

Figure 111: *SIM Card Holder*

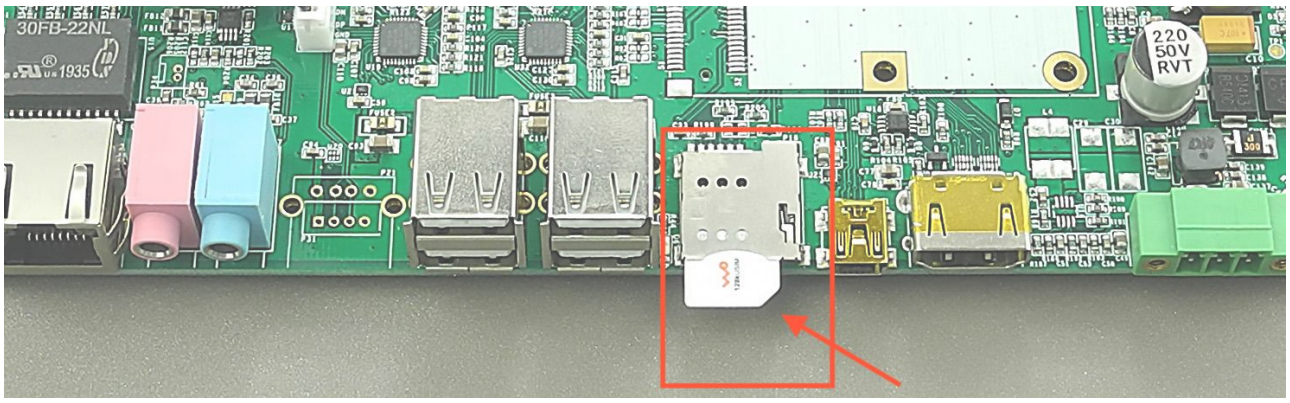

SIM Card Direction

Attention

1. The product does not come shipped with the 4G/LTE module by default.
2. Also, there is no software driver for any kind of 4G/LTE module on Chipsee store.

GPIO Connector

The PPC-A9-190-C Industrial Panel PC has a 10 Pin 3.81mm **GPIO Connector**, as shown in the figure below, that is labeled as P28 on the PCB. The table below gives details about the definition of every Pin.

GPIO Connector

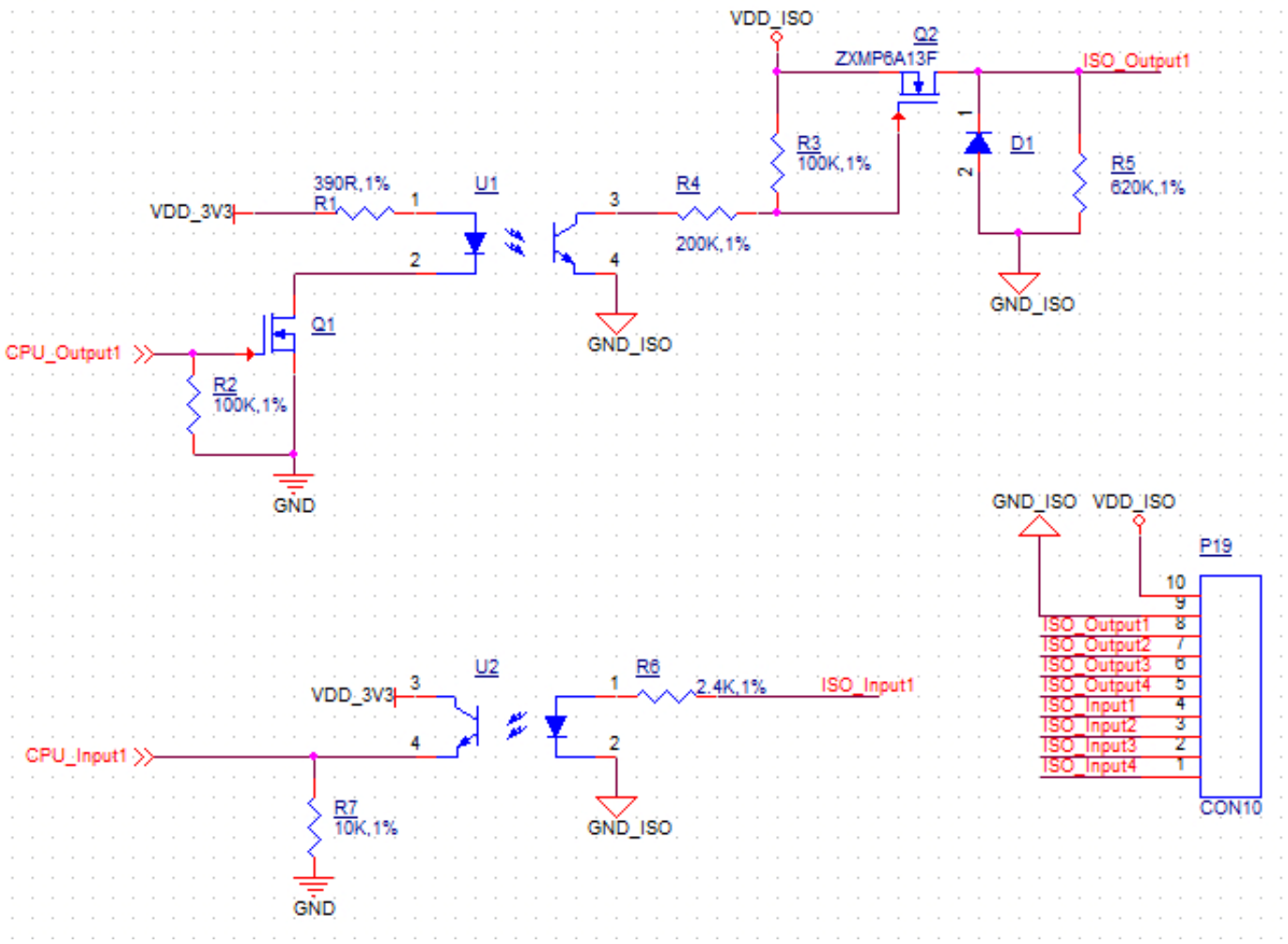

Isolated GPIO reduced schematic

GPIO Connector Pin Definition:		
Pin Number	**Definition**	**Description**
Pin 1	VCC_ISO	Isolated Power Input (+5V – +24V)
Pin 2	GND_ISO	Isolated Ground
Pin 3	OUT1	Isolated Output 1
Pin 4	OUT2	Isolated Output 2
Pin 5	OUT3	Isolated Output 3
Pin 6	OUT4	Isolated Output 4
Pin 7	IN1	Isolated Input 1
Pin 8	IN2	Isolated Input 2
Pin 9	IN3	Isolated Input 3
Pin 10	IN4	Isolated Input 4

Table 35 GPIO Connector Pin-out

Attention

- The GPIO has been Opt-Isolated and it uses the 24V Logic by default. You can use an external isolated power input but the power input range should be from 5V to 24V DC.
- The 4 output channels can drive at most 500mA current on each channel.

Audio Connectors

The PPC-A9-190-C Industrial Panel PC features some audio peripherals, as well. It has 1 x **3.5mm audio input jack** and 1 x **3.5mm audio output jack**.

The pink connector is the audio input jack (line-in) and the blue connector is the audio output jack (line-out, typically around -10 dBV) as shown on the figure below.

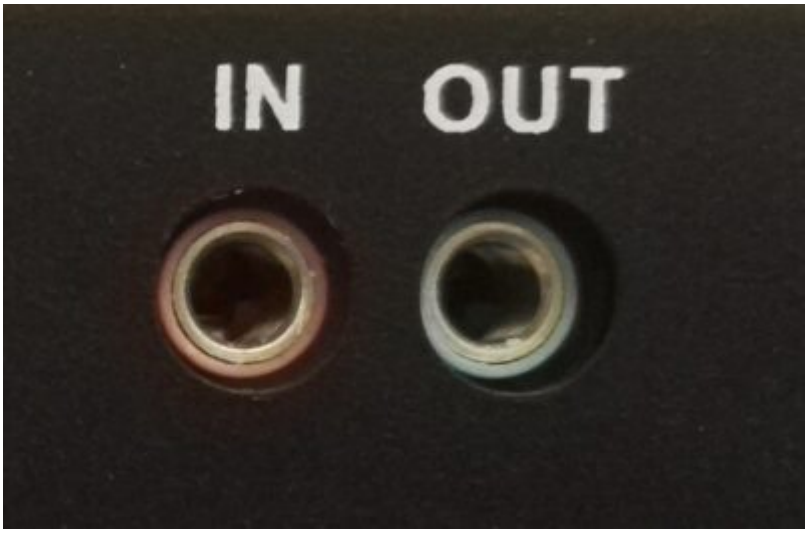

Figure 112: *Audio I/O Connectors*

HDMI Connector

The PPC-A9-190-C Industrial Panel PC is equipped with 1 x **HDMI connector**. The HDMI connector allows connecting an additional (external) monitor. HDMI output resolution can be configured by the software.

Figure 113: *HDMI Connectors*

Boot DIP Switch

The PPC-A9-190-C Industrial Panel PC supports boot from SD card. If you want to re-flash the Operating System (OS), you can use the TF card for that purpose, combined with the **DIP switch** settings as illustrated in the figure below.

There is no need to alter the DIP switch settings during regular operation. However, if you need to reinstall the OS, please refer to the table below. Detailed information on how to re-flash the OS can be found in the Software Documentation.

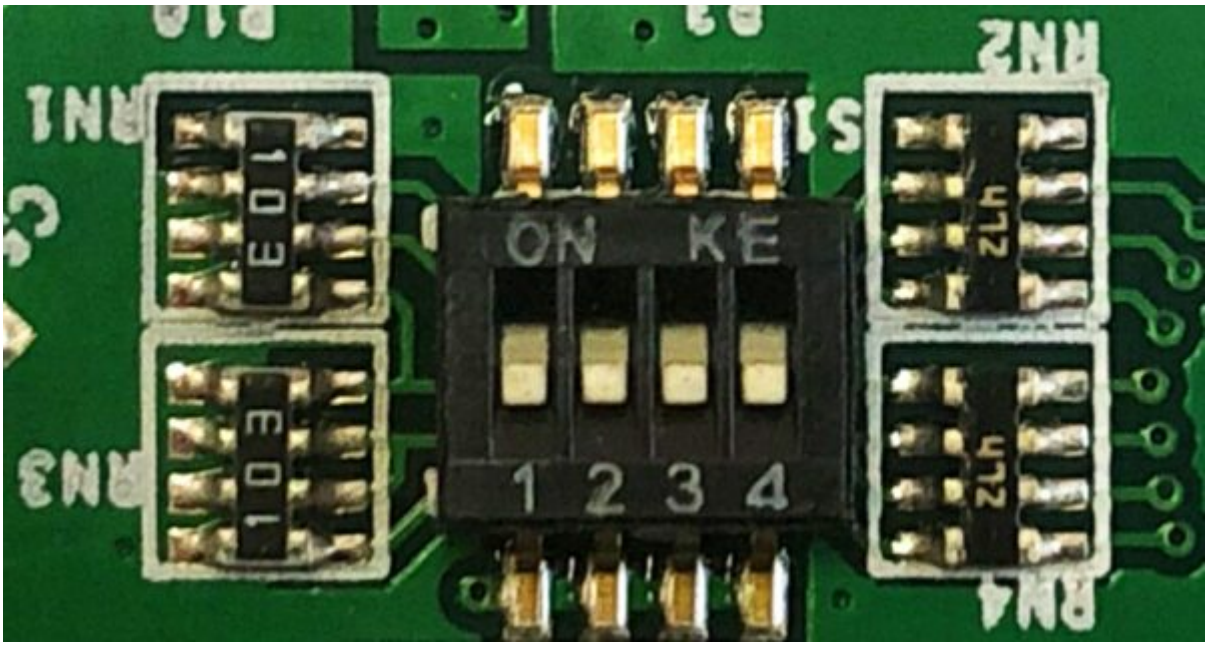

Figure 114: *Boot DIP Switch*

Boot Config Select				
DIP SW	**1**	**2**	**3**	**4**
SD	1	0	0	0
eMMC	1	1	0	1
Download	0	1	1	0

Table 36 Boot Configuration Selection

Measurements and Mounting Procedure

The outer mechanical dimensions of PPC-A9-190-C are 466 x 313 x 63mm (W x L x H).

The PPC-A9-190-C Industrial Panel PC can be mounted with 8 x M4 screws or 4 x M4 screws using the VESA (100x100cm or 75x75cm) and Panel mounting methods, enabling simplified installation onto any standard mounting fixture.

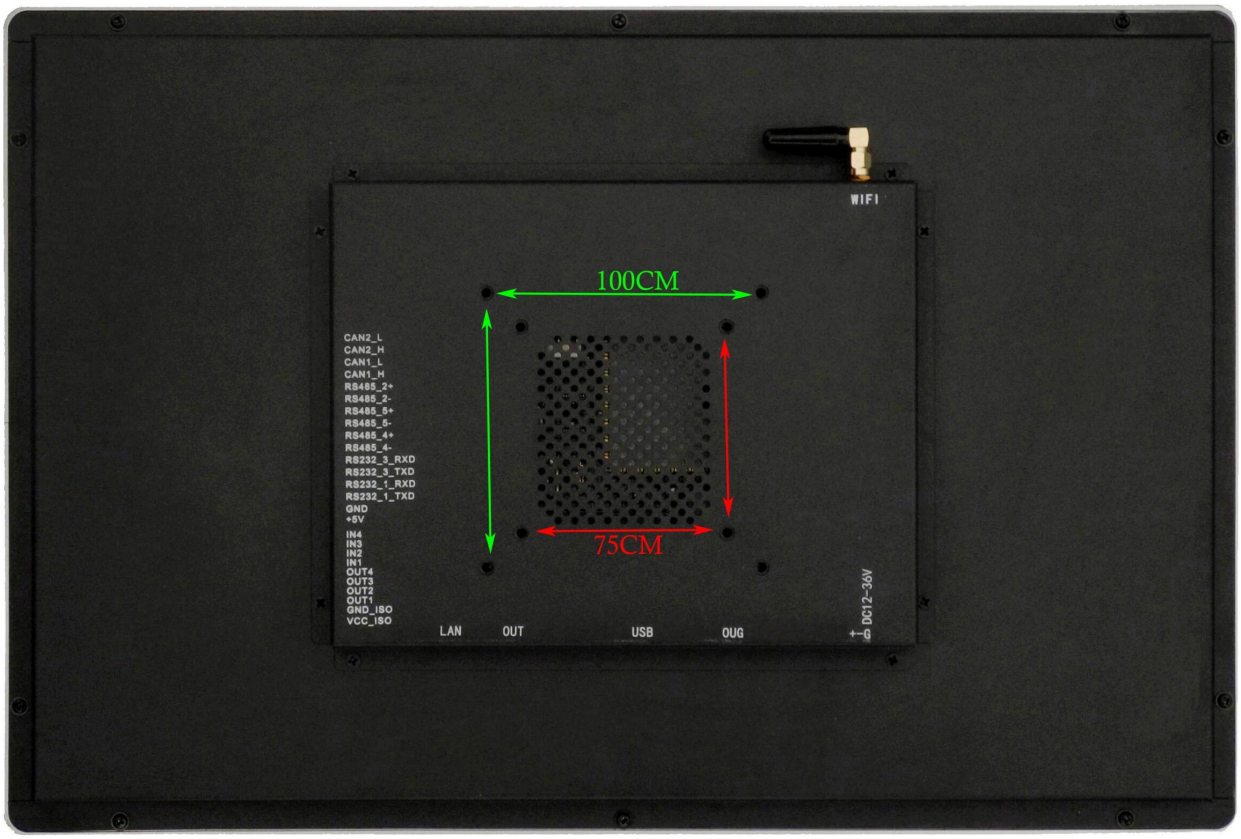

Figure 115: *Mounting Method*

> **Note**
>
> Please make sure the display is not exposed to high pressure when mounting into an enclosure.

You can find detailed information about mounting in the Mount IPC Guide.

Disclaimer

This document is provided strictly for informational purposes. Its contents are subject to change without notice. Chipsee assumes no responsibility for any errors that may occur in this document. Furthermore, Chipsee reserves the right to alter the hardware, software, and/or specifications set forth herein at any time without prior notice and undertakes no obligation to update the information contained in this document.

While every effort has been made to ensure the accuracy of the information contained herein, this document is not guaranteed to be error-free. Further, it does not offer any warranties or conditions, whether expressed orally or implied in law, including implied warranties and conditions of merchantability or fitness for a particular purpose. We specifically disclaim any liability with respect to this document, and no contractual obligations are formed either directly or indirectly by this document.

Despite our best efforts to maintain the accuracy of the information in this document, we assume no responsibility for errors or omissions, nor for damages resulting from the use of the information herein. Please note that Chipsee products are not authorized for use as critical components in life support devices or systems.

Technical Support

If you encounter any difficulties or have questions related to this document, we encourage you to refer to our other documentation for potential solutions. If you cannot find the solution you're looking for, feel free to contact us. Please email Chipsee Technical Support at **support@chipsee.com**, providing all relevant information. We value your queries and suggestions and are committed to providing you with the assistance you require.