Industrial PC

PPC-A53-050

PN: CS12720-IMX8MP-050P

Content can change at anytime, check our website for latest information of this product.
www.chipsee.com

Contents

PPC-A53-050 3

1. Product Overview 7

2. Ordering Options 8

2.1. Operating System 8

2.2. Optional Features 9

3. Hardware Features 10

4. Power Input 12

5. Touch Screen 13

6. Connectivity 14

6.1. RS232/RS485/CAN 14

6.2. USB Connectors 16

6.3. LAN Connectors 18

6.4. WiFi & BT Module 19

7. TF Card Slot 20

8. Audio Connectors 21

9. HDMI Connector 22

10. PROG Button 23

11. Mounting Procedure 24

12. Mechanical Specifications 25

13. Disclaimer 26

14. Technical Support 26

PPC-A53-050

Front View

Rear View

LAN
USB HOST
Chipsee
Type:CS12720-IMX8MP-050P
Rev:C111
OS: Yocto Linux Qt6.3
SN:2024051411000359
https://chipsee.com
Origin:Made in China
0 697417 431079

Side View 1

CAN1_H
CAN1_L
RS485_5-
RS485_5+
RS485_3-
RS485_3+
RS232_2_RDX
RS232_2_TXD
RS232_0_RXD
RS232_0_TXD
GND
+5V OUT
G
-
+
DC:6-36V
LAN
USB HOST
Chipsee

Side View 2

Audio
HDMI-D
Type-C
PROG
LAN
USB HOST
Chipsee
Type:CS12720-IMX8MP-050P
Rev:C111
OS: Yocto Linux Qt6.3
SN:20240514110003 59
https://chipsee.com
Origin:Made in China

Product Overview

The Cortex®-A53 series PPC-A53-050 (PN: CS12720-IMX8MP-050P) is a high-quality industrial panel PC. This single board computer features a 5” 5-point capacitive touch screen with a resolution of 1280 x 720 pixels and a brightness of 400 cd/m^2.

Key Applications

- Human Machine Interface HMI
- Mobile Applications
- Video Processing
- Machine Learning
- Video Gaming
- Process Control
- Process Monitoring
- ATM...

It is available as a device hosed in an aluminum casing with bezels.

The PPC-A53-050 Industrial Panel PC is based around the powerful i.MX8MP System on Chip (SoC), powered by the NXP i.MX8MP low-power processor which integrates a quad-core Cortex®-A53 1.6GHz processor.

The i.MX8MP supports multi-format video decoders and has a high-performance LPDDR4 4GB RAM capable of sustaining demanding memory bandwidths. It also provides a complete set of peripheral interfaces.

Ordering Options

Chipsee products can be customized during the ordering process. The product will be shipped with the pre-installed factory defaults if no extra requirements are specified. The table in the Hardware Features section provides information about the default options bundled with the product.

> **Note**
>
> You can order the PPC-A53-050 from the official Chipsee Store or from your nearest distributor.

Operating System

This product comes with a pre-installed OS of your choice. Please see the list below for the supported OSes, which can also be obtained from the Software Documentation section, along with the detailed installation instructions.

- Android 12
- Yocto Linux Qt 6.3

> **Warning**
>
> The Software Documentation section provides a detailed instruction on how to install different OSes on your own. However, bear in mind that Chipsee can't take the responsibility of inadequate installation procedure. If you "brick" your device, please contact Chipsee Technical Support at **support@chipsee.com** for further assistance.

Optional Features

Does not support 4G/LTE module.

Warning

Installation, repair, and maintenance tasks should be performed by trained personnel only. Chipsee does not bear any responsibility for damage caused by inadequate handling of the product.

Hardware Features

The PPC-A53-050 Industrial Panel PC offers a broad range of performance and connectivity options for scalable integration, providing expandability according to future needs. Some of the key features are listed in the table below.

PPC-A53-050	
CPU	NXP i.MX8MP, Quad(4)-core Cortex-A53 (1.6GHz)
RAM	LPDDR4 4GB
eMMC	32GB
SSD	Not supported
Storage	TF Card, Supports up to 128GB SDHC
HDMI	1 x HDMI-D 2.0 (Micro-HDMI) Out
Display	5" LCD, 1280 x 720, High Brightness: 400 cd/m^2
Touch	5-point capacitive touch screen
USB	1 x USB 2.0 HOST, 1 x USB 3.0 HOST, 1 x USB Type-C1
LAN	1 x RJ45, GbE
Audio	3.5mm Audio In/Out Connector, 2W Internal Speaker
Buzzer	Yes
RTC	High accuracy RTC with farad capacitor, can work 1 week after power off **(default)**. High accuracy RTC with lithium coin battery, can work 3 years after power off *(optional)*.
RS232	default 2 x RS232 (Optional 4 x RS232 at most, include 1 debug port)2
RS485	2 x RS485 at most2
CAN	default 1 x CAN (Optional 2 x CAN at most)
GPIO	N/A
WiFi/BT	Integrated WiFi/BT Module (Bluetooth is functional on Yocto Linux, **not** functional on Android)
4G/LTE	N/A
Power Input	From 6V to 36V
Current	Max brightness, max CPU load: 0.52A at 12V; Min brightness, idle: 0.25A at 12V.
Power Consumption	Max brightness, max CPU load: 6.24W; Min brightness, idle: 3W.
Working Temperature	From -20°C to +60°C
OS	Android 12, Yocto Linux Qt 6.3

PPC-A53-050	
Dimensions	PPC-A53-050 (PN: CS12720-IMX8MP-050P): 138.55 x 84.70 x 27.10mm
Weight	PPC-A53-050 (PN: CS12720-IMX8MP-050P): 310g
Mounting	PPC-A53-050 (PN: CS12720-IMX8MP-050P): Panel, VESA

Table 80 Key Features

1 USB3.0 port and USB-C port share one node and cannot be used together. In Linux USB3.0 HOST is enabled by default; in Android USB-C OTG is enabled by default. You can change this config by software in the operating systems, e.g.: disable USB3.0 HOST then enable USB-C OTG in Linux, or vice versa in Android.

2(1,2) This product has 3 x CPU UART, 1 x USB UART by default, 4 x UART terminals (RS232/RS485) at most. The default configuration is 2 x RS232 and 2 x RS485, including 1 RS232 debug port. There is 1 x CAN (**default**) and 2 x CAN at most, there is 1 x RS485 that can be configured to CAN. UART can be swapped between RS232 and RS485 modes easily, if you need a different RS232/RS485/CAN configuration, please get in touch with the Chipsee Technical Support at **support@chipsee.com** when placing an order.

Power Input

The PPC-A53-050 Industrial Panel PC can be powered by a wide range of input voltages: From 6V to 36V DC. The power input connector is a **3-pin, 3.81mm terminal**. The polarity and the pinout is shown in the figure below.

Power Input

Note that the "**+**" sign represents the positive power input, it is printed at the casing and as a silk-screen on a PCB of the embedded version. The "**-**" terminal is shorted to the ground.

Power Input Definition		
Pin Number	**Definition**	**Description**
Pin 1	Positive Input	DC Power **Positive Terminal**

Power Input Definition		
Pin 2	Negative Input	DC Power **Negative Terminal**
Pin 3	Ground	**Power System Ground**

Table 81 Power Connector

Note

The system ground "**G**" is connected to power negative "**-**" on board.

Touch Screen

The PPC-A53-050 Industrial Panel PC uses a 5-point capacitive touch screen. The touch layer is connected through I2C.

Attention

A capacitive touch screen is susceptible to power noise and Electromagnetic Radiation (EMR). It may cause LCD ripples or even capacitive touch malfunction. If using a capacitive multi-touch test application, you might notice the touch points float erratically across the display. There are several solutions to this problem:

1. Use a high-quality Power Adapter Unit (PSU) with low EMR. You can also provide power from a battery.
2. Make sure that the PPC-A53-050 Power Input connector (pin 3) is properly connected to the Power System Ground to provide sufficient EMI shielding and eliminate the problem entirely.
3. Bad GND problems can also be confirmed by touching pin 3 of the Power Input connector with one hand while operating the capacitive touch screen with the other hand. In this case, the operator's body acts as the Power System Ground.

Connectivity

There are many connectivity options available on the PPC-A53-050 industrial PC. It has 1 x USB 2.0 HOST, 1 x USB 3.0 HOST, 1 x USB Type-C (USB3.0 and USB-C share one node); 1 x RJ45, GbE; up to 4 x UART terminals (RS232/RS485), up to 2 x CAN.

RS232/RS485/CAN

The serial communication interfaces (RS485, RS232, and CAN) are routed to a **12-pin 3.81mm terminal**, as illustrated on the figure below.

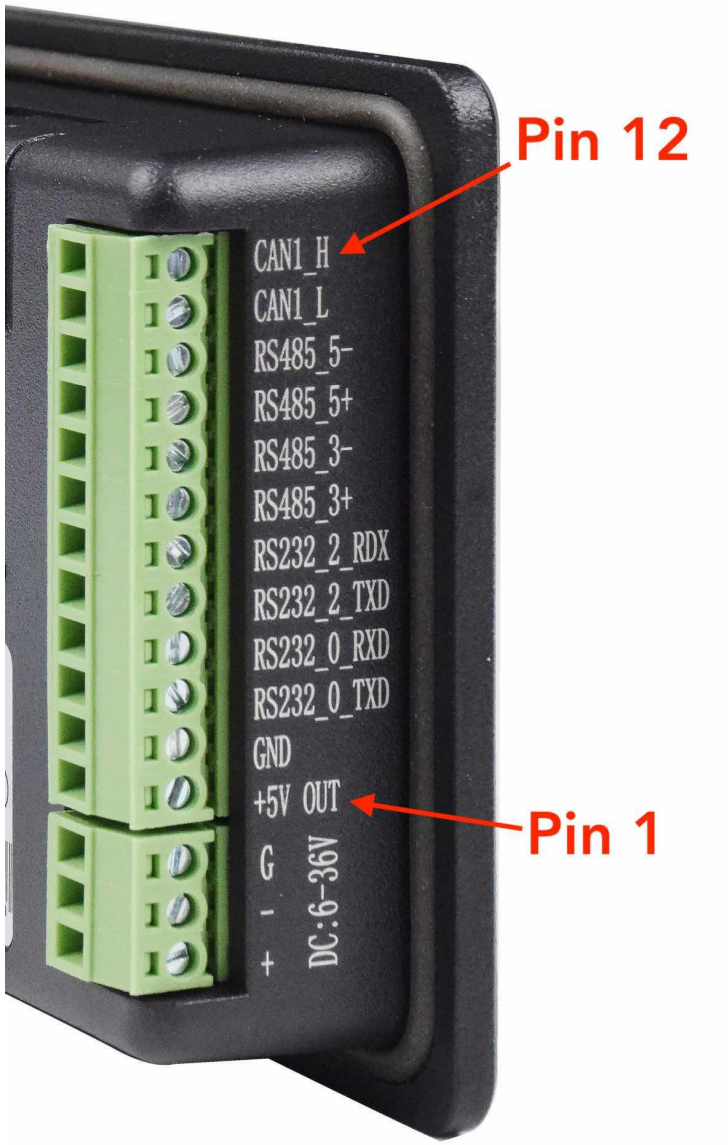

RS232, RS485 and CAN

This product has 3 x CPU UART, 1 x USB UART by default, 4 x UART terminals (RS232/RS485) at most. The default configuration is 2 x RS232 and 2 x RS485, including 1 RS232 debug port. There is 1 x CAN (**default**) and 2 x CAN at most, there is 1 x RS485 that can be configured to CAN.

The table below offers more detailed description of every pin and its definition:

RS232 / RS485 / CAN Pin Definition:		
Pin Number	**Definition**	**Description**
Pin 12	CAN1_H	CAN H signal
Pin 11	CAN1_L	CAN L signal
Pin 10	RS485_5-	USB UART1, RS485 –(B) signal
Pin 9	RS485_5+	USB UART1, RS485 +(A) signal
Pin 8	RS485_3-	CPU UART3, RS485 –(B) signal
Pin 7	RS485_3+	CPU UART3, RS485 +(A) signal
Pin 6	RS232_2_RXD	CPU UART4, RS232 RXD signal
Pin 5	RS232_2_TXD	CPU UART4, RS232 TXD signal
Pin 4	RS232_0_RXD	CPU UART2, RS232 RXD signal, Debug Port
Pin 3	RS232_0_TXD	CPU UART2, RS232 TXD signal, Debug Port
Pin 2	GND	System Ground
Pin 1	+5V	System +5V Power Output, No more than 1A Current output

Table 82 Connectivity Section

Attention

1. RS485 can control the input and output direction automatically. There's no need to control it from within the software.
2. The 120Ω match resistor for the **RS485** is **already mounted** by default.
3. The 120Ω match resistor for the **CAN** bus is **NOT mounted** by default.

USB Connectors

There are 2 x **USB HOST** and 1 x **USB DEVICE** (for flashing OS) ports onboard: 1 x USB 2.0 HOST, 1 x USB 3.0 HOST, 1 x USB Type-C, as shown in the figures below.

USB3.0 port and USB-C port share one node and cannot be used together. In Linux USB3.0 HOST is enabled by default; in Android USB-C OTG is enabled by default. You can change this config by software in the operating systems, e.g.: disable USB3.0 HOST then enable USB-C OTG in Linux, or vice versa in Android.

USB 2.0 HOST Port

USB 3.0 HOST Port

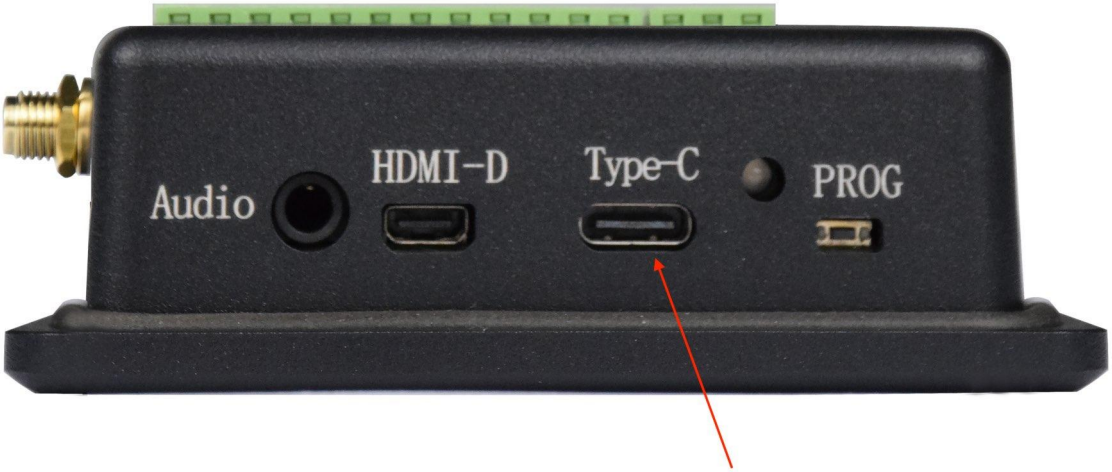

USB Type-C Port

Warning

Be careful not to touch surrounding electronic components accidentally while plugging USB devices into the embedded IPC version.

LAN Connectors

LAN (RJ45) connector provides Ethernet connectivity over standardized Ethernet cables as shown in the figure below. The integrated 1 x RJ45, GbE interface supports up to 1 Gbps data throughput.

No support for Power over Ethernet (PoE) feature on this model.

RJ45 LAN Connector

Note

Use CAT5 or better cables to achieve full data throughput over maximum distance defined by the 1000BASE-T standard (100m).

WiFi & BT Module

The PPC-A53-050 Industrial Panel PC is equipped with the popular **Realtek RTL8821CS WiFi/BT module** which supports BT/BLE 2.1/3.0/4.2, as well as 802.11ac/abgn 433Mbps 2.4/5.8 GHz Wireless LAN (WLAN).

> **Warning**
>
> Bluetooth is functional on Yocto Linux, **not** functional on Android OS.

Figure 388: *RTL8821CS WiFi/BT Module*

The PPC-A53-050 includes an SMA connector for an external WiFi/BT antenna, as illustrated in the figure below.

WiFi+BT Antenna SMA

TF Card Slot

The PPC-A53-050 Industrial Panel PC features 1 x **TF Card (micro SD) slot**. TF Card can address up to 128GB of storage.

TF (micro SD) Card Slot

Note

The product does not come shipped with the TF Card by default.

Audio Connectors

The PPC-A53-050 Industrial Panel PC features some audio peripherals. It has a **3.5mm audio input/output jack**, an **internal speaker**, as well as a small **buzzer**.

Audio Connector

The miniature 2W embedded speaker is handy for audio reproduction, the small buzzer can play alarm/notification sounds.

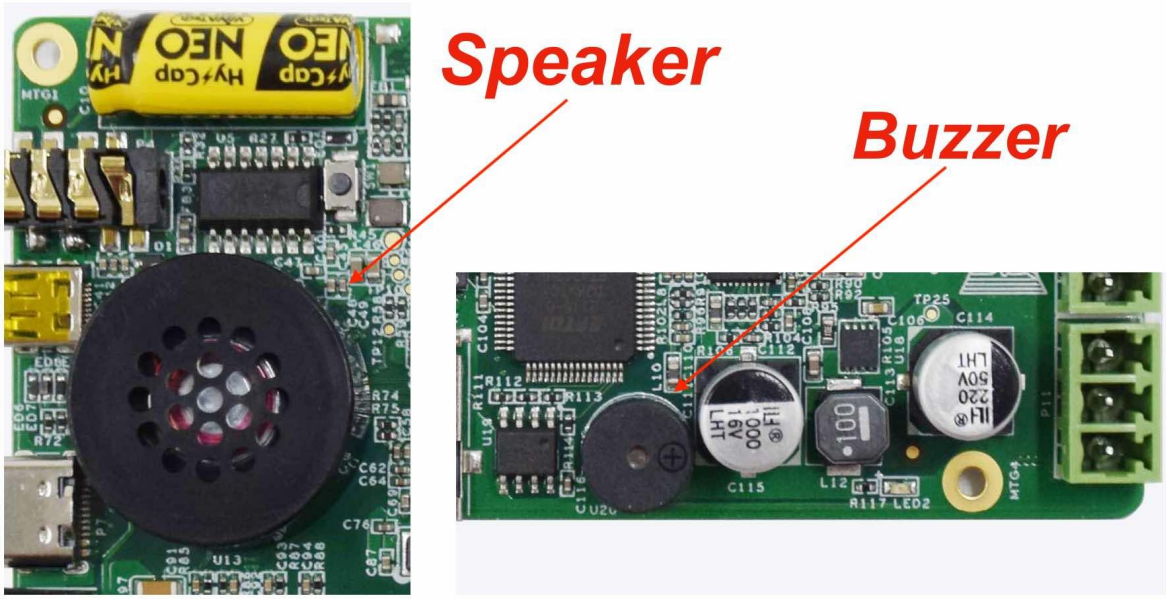

2W Micro Speaker and Buzzer

Attention

By plugging in the headphone cable, the internal speaker will be disabled automatically.

HDMI Connector

The PPC-A53-050 Industrial Panel PC is equipped with 1 x HDMI-D 2.0 (Micro-HDMI) Out connector. The HDMI connector allows connecting an additional (external) monitor. HDMI output resolution can be configured by the software.

HDMI Connector

PROG Button

The PPC-A53-050 Industrial Panel PC has one button on the board marked as PROG, as shown in the figure below. It controls how the device will be booted.

To boot from SD card, press and hold the PROG button, then connect the power supply, after a few seconds, you can see the system boot from SD card, then you may release the button.

When the button is not pressed while powering up, the PPC-A53-050 will boot normally from eMMC.

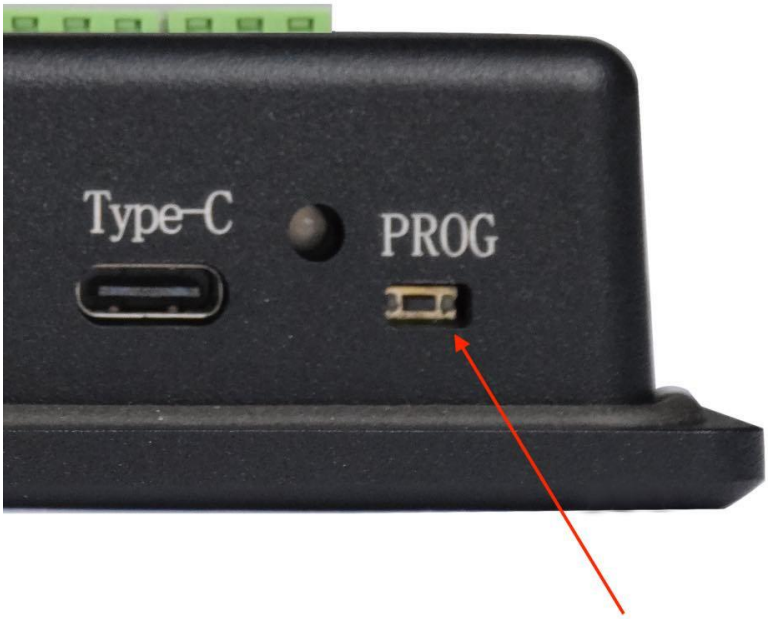

PROG Button

Mounting Procedure

You can mount PPC-A53-050 with VESA mounting (guide): 2 x M4 screws, enabling simplified installation onto any standard mounting fixture.

You can also mount PPC-A53-050 with panel mounting method (guide).

Attention

Please make sure the display is not exposed to high pressure when mounting into an enclosure.

Mechanical Specifications

For PPC-A53-050, the outer mechanical dimensions are 138.55 x 84.70 x 27.10mm (W x L x H).

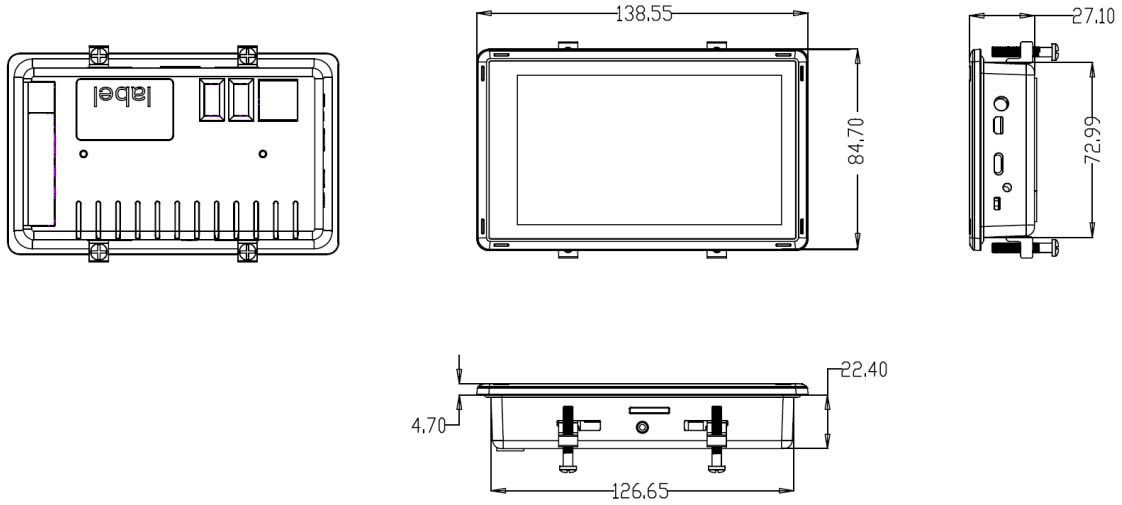

Dimensions (PPC-A53-050)

Disclaimer

This document is provided strictly for informational purposes. Its contents are subject to change without notice. Chipsee assumes no responsibility for any errors that may occur in this document. Furthermore, Chipsee reserves the right to alter the hardware, software, and/or specifications set forth herein at any time without prior notice and undertakes no obligation to update the information contained in this document.

While every effort has been made to ensure the accuracy of the information contained herein, this document is not guaranteed to be error-free. Further, it does not offer any warranties or conditions, whether expressed orally or implied in law, including implied warranties and conditions of merchantability or fitness for a particular purpose. We specifically disclaim any liability with respect to this document, and no contractual obligations are formed either directly or indirectly by this document.

Despite our best efforts to maintain the accuracy of the information in this document, we assume no responsibility for errors or omissions, nor for damages resulting from the use of the information herein. Please note that Chipsee products are not authorized for use as critical components in life support devices or systems.

Technical Support

If you encounter any difficulties or have questions related to this document, we encourage you to refer to our other documentation for potential solutions. If you cannot find the solution you're looking for, feel free to contact us. Please email Chipsee Technical Support at **support@chipsee.com**, providing all relevant information. We value your queries and suggestions and are committed to providing you with the assistance you require.