Industrial PC

PPC-J1900-133-C

PN: PPC-J1900-133-C

Content can change at anytime, check our website for latest information of this product.
www.chipsee.com

Contents

PPC-J1900-133-C 3

1. Product Overview 7

2. Product Changes 8

3. Ordering Options 8

3.1. Operating System 8

3.2. Optional Features 9

4. Hardware Features 10

5. Power Input 11

6. Touch Screen 12

7. Connectivity 13

7.1. RS232/RS485 13

7.2. USB HOST 14

7.3. LAN 15

7.4. HDMI 16

8. Mounting Procedure 17

9. Mechanical Specifications 17

10. Disclaimer 18

11. Technical Support 18

PPC-J1900-133-C

Front View

Rear View

CAUTION
Hot surface!!
CAUTION
Chipsee
PN:PPC-J1900-133-C
OS:Windows 7
Config DDR 4G SSD 64G
SN: 20250617 70000430
https://chipsee.com
Origin:Made in China
CAUTION
Hot surface

Side View 1

Side View 2

Product Overview

The PPC-J1900 series PPC-J1900-133-C is a rugged, high-quality NEMA/IP65-compliant industrial panel PC. This single board computer features a 13.3” multi-point capacitive touch screen with a resolution of 1920 x 1080 pixels.

Key Applications

- Human Machine Interface HMI
- Industrial Automation
- Process Control
- Smart Grid Management
- CNC Manufacturing
- Environmental Monitoring
- Machine Vision Inspection
- ATM, Kiosk, Infotainment...

The PPC-J1900-133-C Industrial Panel PC is powered by Intel® Celeron® J1900 quad-core CPU and equipped with a broad range of connectivity options, allowing it to meet highly demanding application requirements in harsh industrial or outdoor environments.

A specially designed magnesium-aluminum alloy housing with fins for increased heat dissipation serves as a passive cooler, eliminating the need for built-in fans. The fan-less design reduces noise, as well as the maintenance costs and efforts, increasing reliability at the same time.

Caution

Be careful when handling the product while it is operating: the back panel might become hot under heavy CPU load.

Product Changes

Ver 2.0

- Released on Jul 1, 2025

> **Warning**
>
> **Breaking Changes: this product is completely redesigned.**
>
> If you bought PPC-J1900-133-C before **July 1, 2025**, please note the new board (ver 2.0) is **not compatible** with the previous board (ver 1.1).

Ver 1.1

- Initial Release
- `Download Archived Manual: PPC-J1900-133-C-ver1.1.pdf`

Ordering Options

Most of the Chipsee products can be customized during the ordering process. The product will be shipped with the pre-installed factory defaults if no extra requirements are specified. The table in the Hardware Features section provides information about the default options bundled with the product.

> **Note**
>
> You can order PPC-J1900-133-C from the official Chipsee Store or from your nearest distributor.

Operating System

By default, PPC-J1900-133-C comes with the Ubuntu Linux operating system (OS) pre-installed. A different OS can be selected during the ordering process.

In addition to Linux, PPC-J1900-133-C also supports Windows 7, Windows 8 and Windows 10.

Optional Features

The PPC-J1900-133-C Industrial Panel PC does not include WiFi/BT and/or 3G/4G modules by default. The Wi-Fi/BT module is optional and can be selected during the ordering process.

The 3G/4G module is a mini-PCIe module, WiFi/BT module is also a mini-PCIe module. There is only 1 mini-PCIe socket on the board, so only one (4G or WiFi) module can be installed. You may use a USB module together with the mini-PCIe module if you need both 4G and WiFi, though.

> **Warning**
>
> Installation, repair, and maintenance tasks should be performed by trained personnel only.
> Chipsee does not bear any responsibility for damage caused by inadequate handling of the product.

Hardware Features

The PPC-J1900-133-C Industrial Panel PC offers a broad range of performance and connectivity options for scalable integration, providing expandability according to future needs.

Some of the key features are listed in the table below.

PPC-J1900-133-C	
CPU	Intel® Celeron® J1900, 2GHz, Quad-Core, 2MB Cache, TDP=10W
GPU	Intel® HD integrated GPU, 512MB shared memory
RAM	Default 4GB, maximum 8GB, DDR3L 1333 SO-DIMM
Display	13.3” LCD, resolution 1920 x 1080 px, brightness 300 cd/m^2
Storage	Default mSATA 128GB SSD, supports 256/512GB
Touch	Multi-point capacitive touch screen
USB	1 x USB 3.0 HOST, 3 x USB 2.0 HOST ports (Type A)
LAN	2 x RJ45, 1 Gbps Ethernet Controller
UART	4 x RS232, 2 x RS485
GPIO	N/A
3G/4G	Optional, module available from the Chipsee store
WiFi/BT	Optional, module available from the Chipsee store
HDMI	1 x HDMI out
VGA	N/A
mini-PCIe	1 x mini PCIe
Power IN	12V DC
Power Consumption	22W
OS	Ubuntu Linux (default), Windows 7 / 8 / 10 (optional)
Operating Temp.	From 0°C to 60°C (no condensation)
Storage Temp.	From -20°C to 75°C (no condensation)
Dimensions	355 x 225 x 55mm
Mounting	VESA 100, Panel mounting with fixtures
Weight	3000g

Table 296 Table 1: Key Features

Power Input

The PPC-J1900-133-C Industrial Panel PC can be powered by 12V DC power supply. The power input connector is a 2-pin, 3.81mm screw terminal.

The **POWER** button can be used to switch the power ON or OFF.

Check the image below for positive and negative DC input, you can use either pair of the two ports:

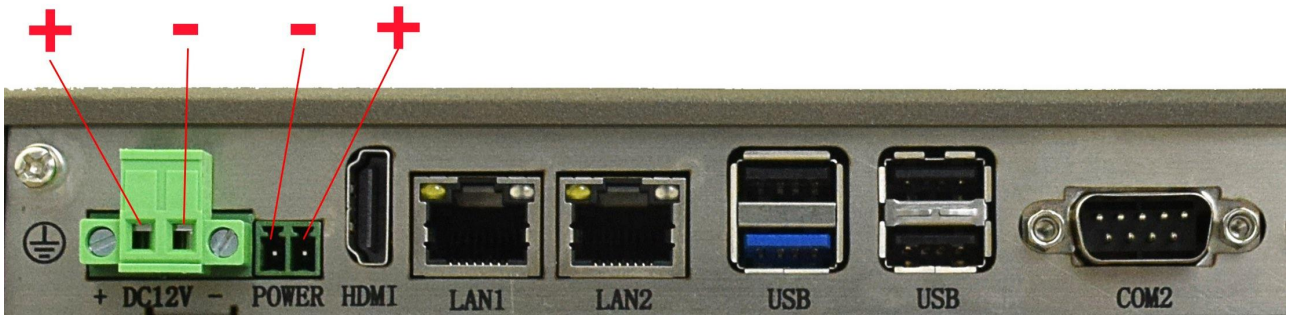

12V DC Power Input

Note

If the product is used to control some key processes, it is highly recommended to use an Uninterruptible Power Supply (UPS) to prevent critical data loss.

Touch Screen

PPC-J1900-133-C is equipped with a multi-point capacitive touch screen. Its multitouch detection capability enables implementation of some advanced GUI operations, such as two-finger zoom or rotation.

The capacitive touch screen can be operated by fingers, gloves with a special coating, or a conductive stylus.

Size/Type: 13.3” multi-point capacitive touch screen
Touch screen structure: G+F+F
Surface Strength: 7H
Surface Hardness: 50G steel ball 70cm impact drop 3 times not broken
Service Life (MTBF): 50 million touch events
Light Transmittance: > 92%

Connectivity

There are many connectivity options available on the PPC-J1900-133-C industrial PC. It has 4 x USB Type A connectors configured as HOSTS, 1 x HDMI out port, 2 x RJ45 supporting Gigabit Ethernet (GbE), and 4 x RS232, 2 x RS485 connectors.

RS232/RS485

The PPC-J1900-133-C Industrial Panel PC has 2 x 9-pin D-sub connectors and 1 x 16-pin 3.81mm connector with pluggable terminal block. The 9-pin D-sub connectors labeled as **COM1/COM2** are RS485.

COM 3/4/5/6 are RS232:

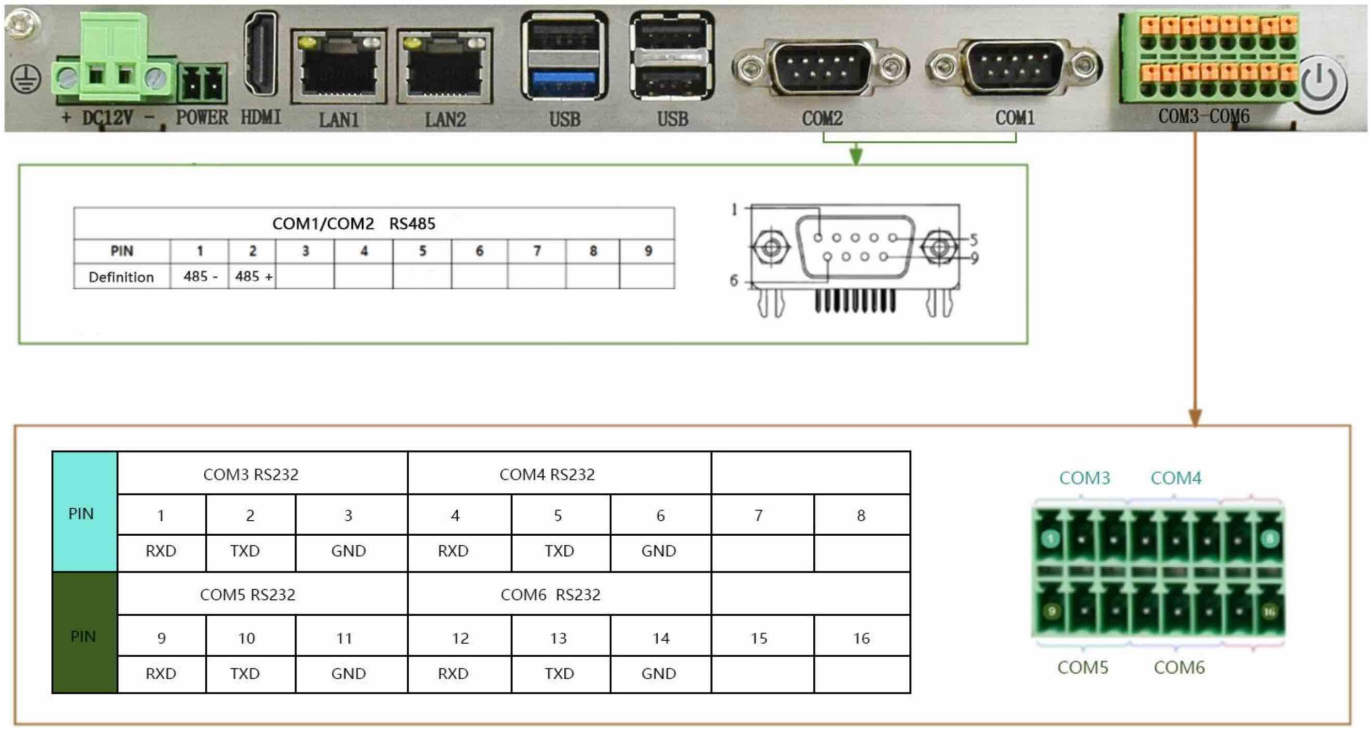

RS232 / RS485 Interfaces

USB HOST

PPC-J1900-133-C is equipped with 3 x USB 2.0 connectors and 1 x USB 3.0 HOST connectors.

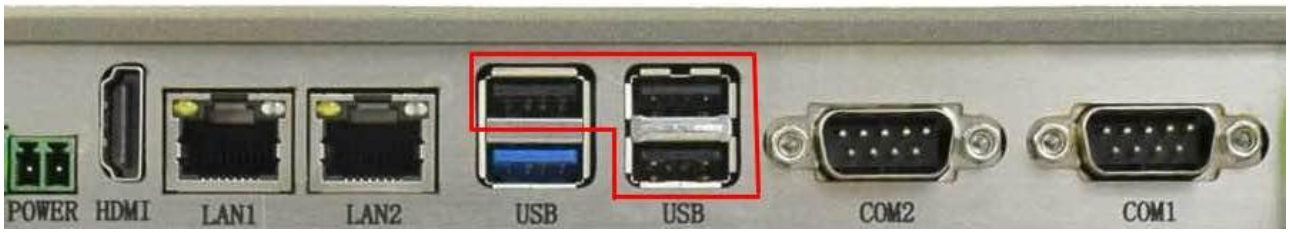

USB 2.0 HOST Port

USB 3.0 HOST Port

Warning

Be careful not to touch surrounding electronic components accidentally while plugging USB devices into the embedded IPC version.

LAN

2 x **LAN (RJ45)** provide Ethernet connectivity over standardized Ethernet cables. The integrated two-port Ethernet interface supports 10/100/1000BASE-T/TX specifications with automatic speed negotiation and Wake on LAN (WoL) functionality.

Power over Ethernet (PoE) is not supported.

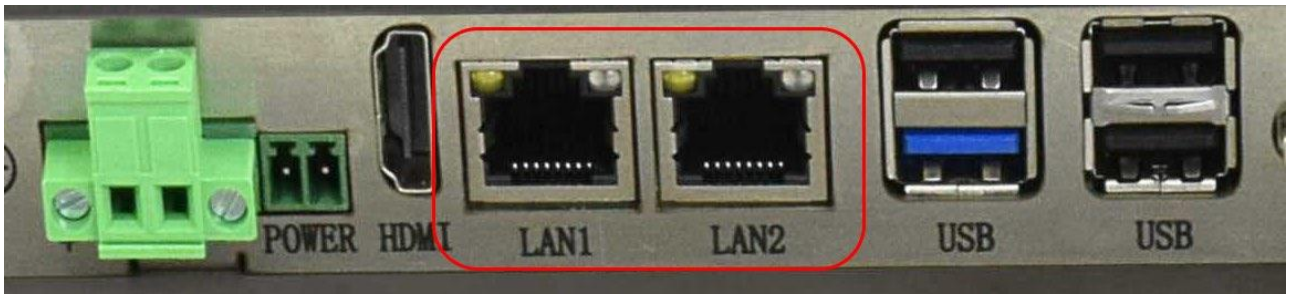

LAN/RJ45

Note

Use CAT5 or better cables to achieve full data throughput over maximum distance defined by the 1000BASE-T standard (100m).

HDMI

The PPC-J1900-133-C Industrial Panel PC is equipped with 1 x **HDMI** connector. The HDMI connector allows connecting an additional (external) monitor.

HDMI output resolution can be configured by the software.

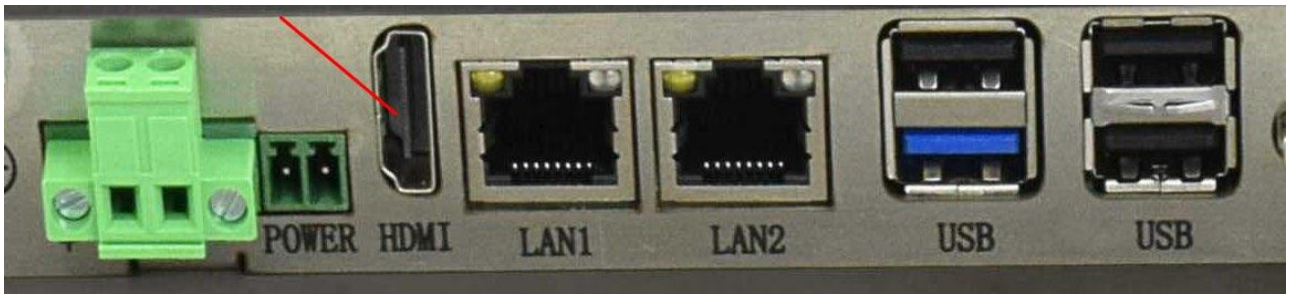

HDMI Connector

Mounting Procedure

The PPC-J1900-133-C Industrial Panel PC supports VESA 100 x 100 mounting pattern with 4 x M4 screws, enabling simplified installation onto any standard VESA mounting rack. Other mounting options might also be supported according to the table in the Hardware Features section.

You can find detailed information about mounting in the Mount IPC Guide.

Mechanical Specifications

The outer mechanical dimensions of The PPC-J1900-133-C Industrial Panel PC are 355 x 225 x 55mm (W x L x H). Please refer to the technical drawing in the figure below for details related to the specific product measurements.

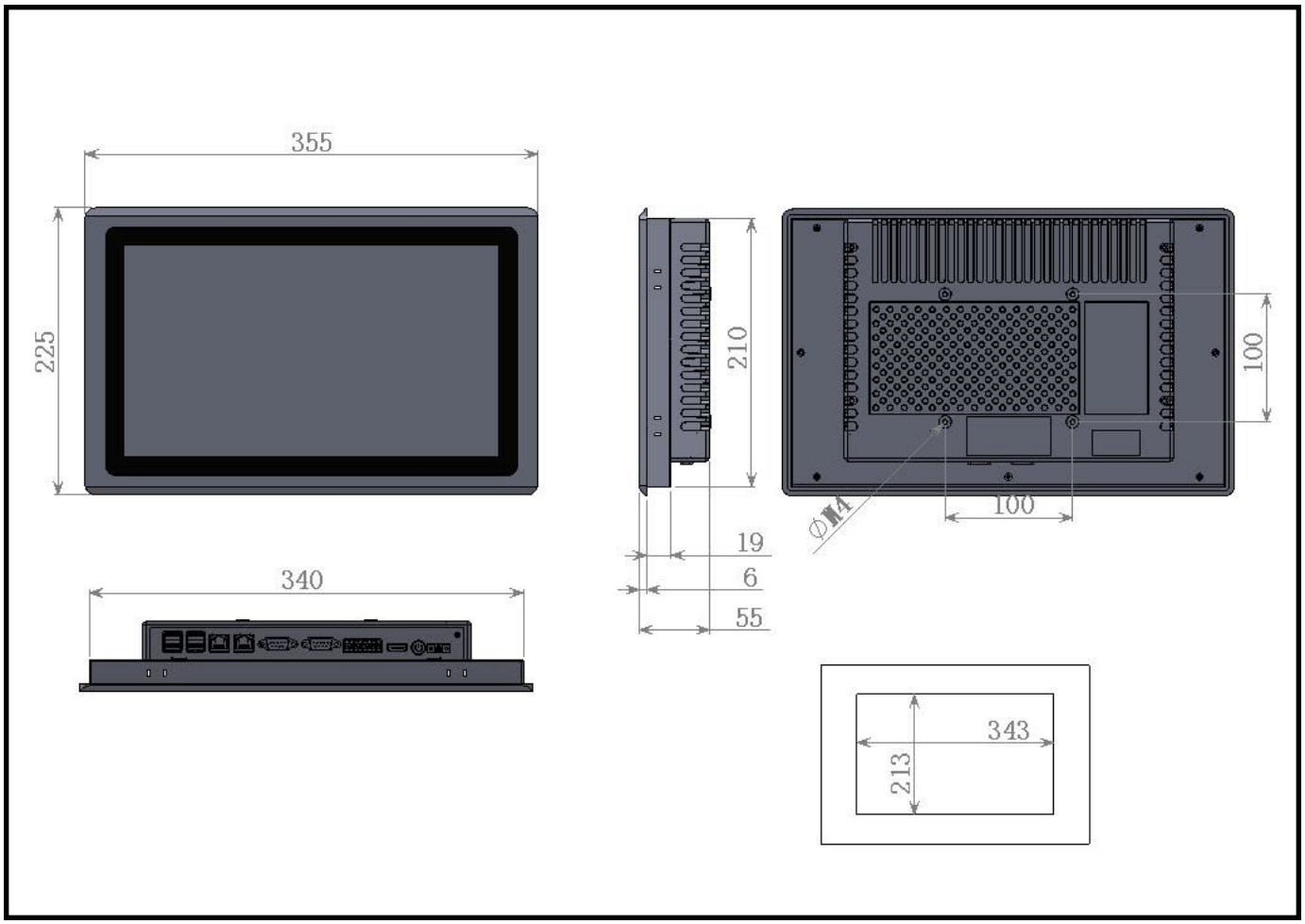

Figure 859: *PPC-J1900-133-C Technical Drawing*

Disclaimer

This document is provided strictly for informational purposes. Its contents are subject to change without notice. Chipsee assumes no responsibility for any errors that may occur in this document. Furthermore, Chipsee reserves the right to alter the hardware, software, and/or specifications set forth herein at any time without prior notice and undertakes no obligation to update the information contained in this document.

While every effort has been made to ensure the accuracy of the information contained herein, this document is not guaranteed to be error-free. Further, it does not offer any warranties or conditions, whether expressed orally or implied in law, including implied warranties and conditions of merchantability or fitness for a particular purpose. We specifically disclaim any liability with respect to this document, and no contractual obligations are formed either directly or indirectly by this document.

Despite our best efforts to maintain the accuracy of the information in this document, we assume no responsibility for errors or omissions, nor for damages resulting from the use of the information herein. Please note that Chipsee products are not authorized for use as critical components in life support devices or systems.

Technical Support

If you encounter any difficulties or have questions related to this document, we encourage you to refer to our other documentation for potential solutions. If you cannot find the solution you're looking for, feel free to contact us. Please email Chipsee Technical Support at **support@chipsee.com**, providing all relevant information. We value your queries and suggestions and are committed to providing you with the assistance you require.