Industrial PC

PPC-10510U-150-C

PN: PPC-10510U-150-C

Content can change at anytime, check our website for latest information of this product.
www.chipsee.com

Contents

PPC-10510U-150-C 3

1. Product Overview 7

2. Ordering Options 8

2.1. Operating System 8

2.2. Optional Features 9

3. Hardware Features 10

4. Power Input 11

5. Touch screen 12

6. Connectivity 13

6.1. RS232/485 Connectors 13

6.2. USB HOST Connectors 14

6.3. LAN Connectors 15

6.4. HDMI Connector 16

7. Mounting Procedure 17

8. Mechanical Specifications 17

9. Disclaimer 18

10. Technical Support 18

PPC-10510U-150-C

Front View

Rear View

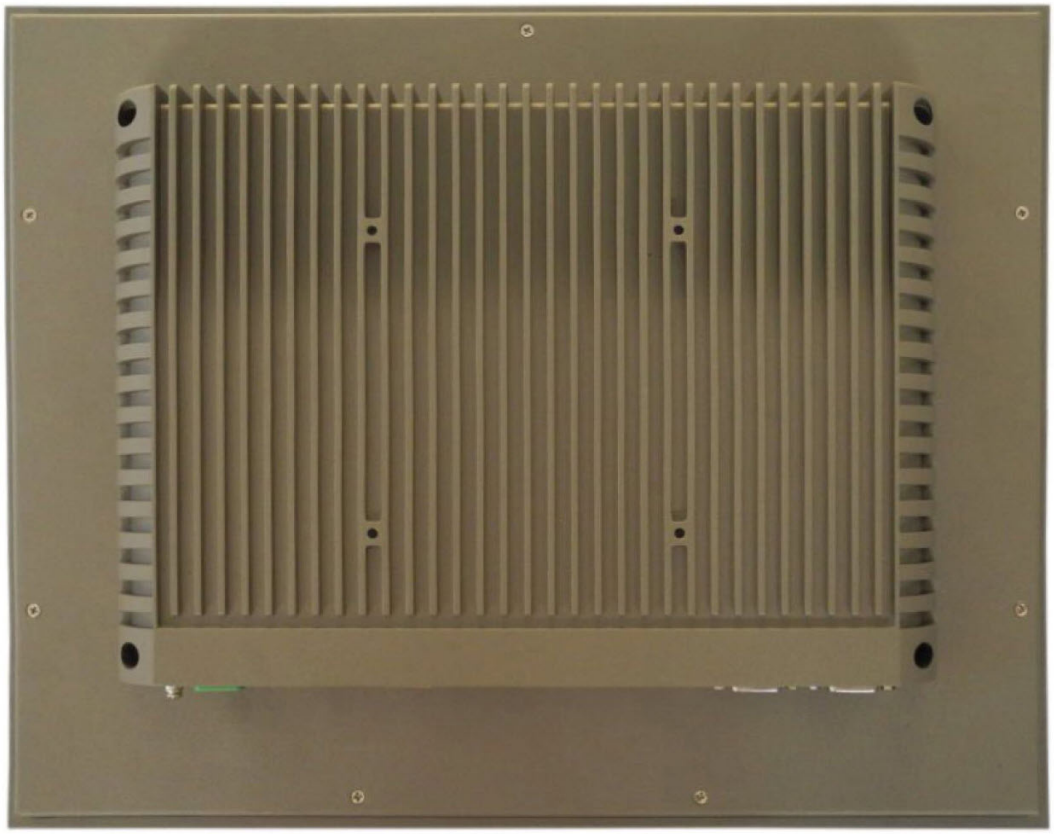

Side View 1

Side View 2

Product Overview

The PPC-10510U series PPC-10510U-150-C is a rugged, high-quality NEMA 4X/IP65-compliant industrial panel PC. This single board computer features a Touch sensitive 15.0” with a resolution of 1024 x 768 pixels.

PPC-10510U-150-C is powered by the high-performance Intel® Core™ i7 10510U quad-core (8 threads) CPU by default, but it can be scaled down to i5 10310U, depending on application requirements. The PPC-10510U-150-C Industrial Panel PC also features a broad range of connectivity options, allowing it to meet even the most demanding requirements in harsh industrial or outdoor environments.

Key Applications

- Human Machine Interface HMI
- Industrial Automation
- Process Control
- Smart Grid Management
- CNC Manufacturing
- Environmental Monitoring
- Machine Vision Inspection
- Predictive Maintenance
- ATM, Kiosk, Infotainment...

Despite their cutting-edge performances, the offered CPUs consume very little power: their TDP is only 15W at respective base clock frequencies. From the ground-up, these CPUs are built for low power consumption. As such, they are best suited for mobile and power-constrained industrial or field applications.

A specially designed magnesium-aluminum alloy housing with fins for increased heat dissipation serves as a passive cooler, eliminating the need for built-in fans. The fan-less design reduces noise, as well as the maintenance costs and efforts, increasing reliability at the same time.

Caution

Be careful when handling the product while it is operating: the back panel might become hot under heavy CPU load.

Ordering Options

Most of the Chipsee products can be customized during the ordering process. The product will be shipped with the pre-installed factory defaults if no extra requirements are specified. The table in the Hardware Features section provides information about the default options bundled with the product.

> **Note**
>
> You can order PPC-10510U-150-C from the official Chipsee Store or from your nearest distributor.

Operating System

By default, PPC-10510U-150-C comes with the Linux operating system (OS) pre-installed. A different OS can be selected during the ordering process. In addition to Linux, PPC-10510U-150-C also supports Windows 7 and Windows 10 OS.

Optional Features

The PPC-10510U-150-C Industrial Panel PC offers the highest levels of scalability in the entire products portfolio. It can be configured with any of the three CPUs offered.

Feel free to contact Chipsee Technical Support at **support@chipsee.com** for all your customization needs.

PPC-10510U-150-C does not include WiFi/BT and/or 3G/4G modules by default. These modules are optional and can be selected at the Chipsee store during the ordering process.

> ⚠ **Warning**
>
> Installation, repair, and maintenance tasks should be performed by trained personnel only.
> Chipsee does not bear any responsibility for damage caused by inadequate handling of the product.

Hardware Features

The PPC-10510U-150-C Industrial Panel PC offers a broad range of performance and connectivity options for scalable integration, providing expandability according to future needs. Some of the key features are listed in the table below.

PPC-10510U-150-C	
CPU Options	Intel® Core™ i7 10510U / i5 10310U; TDP=15W
GPU	Intel® HD integrated GPU, shared memory (CPU-dependent)
RAM	Default 4GB, up to 16GB (1 x SO-DIMM DDR4L - CPU-dependent)
Display	15.0” LCD, resolution 1024 x 768px, brightness 300 cd/m^2
Storage	Default mSATA 32GB SSD (supports up to 512GB)
Touch	Default Capacitive touch screen (resistive touch screen is optional)
USB	4 x USB 3.0 HOST ports (Type A)
LAN	2 x RJ45, GbE (Intel® I211), Wake on LAN (WoL) support
UART	Default 4 x RS232 (2 x RS485 optional)
3G/4G	Optional, modules available from the manufacturer
WiFi/BT	Optional, modules available from the manufacturer
HDMI	1 x HDMI Out port
SATA	1 x mSATA, 1 x SATA
Power Input	12 to 24V DC
Power Consumption	27W
OS	Default Linux, supports Windows 7, Windows 10
Operating Temp.	From -20°C to +60°C
Dimensions	376 x 300 x 61.7mm
Mounting	VESA 100, Panel mounting with fixtures
Weight	4500g

Table 321 Table 1: Key Features

Power Input

The PPC-10510U-150-C Industrial Panel PC can be powered by a wide range of input voltages: from 12V to 24V DC. The power input connector is a 2-pin, 3.81mm screw terminal *(Figure 1)*. The polarity of the power connector is clearly labeled on the housing itself: the '**+**' sign is the positive, while the '**-**' sign is the negative power supply input.

*The **POWER** button is located next to the power input connector and can be used to switch the power ON or OFF.*

The power input section of PPC-10510U-150-C features a range of protection features, including over-current, over-voltage, power surge, and reverse polarity protection, allowing it to meet stringent industrial safety regulations.

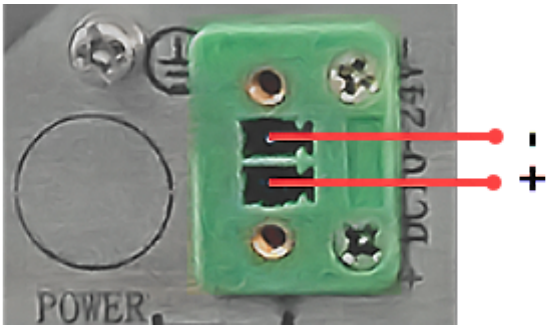

Figure 876: *Figure 1: Power Input Section*

Note

If the product is used to control some key processes, it is highly recommended to use an Uninterruptible Power Supply (UPS) to prevent critical data loss.

Touch screen

The PPC-10510U-150-C Industrial Panel PC can be equipped with either a resistive or capacitive touch screen, as per request.

A resistive touch screen is an ideal option for harsh industrial conditions due to its high immunity against high temperature, dirt, and dust. In addition, it does not require any special material to be operated; the resistive touch screen can be used with regular rubber gloves, fingers, or a plastic stylus.

The multi-point capacitive touch screen offers high precision and enables implementation of some advanced GUI operations, such as two-finger zoom or rotation. It can be operated by fingers, gloves with a special coating, or a conductive stylus. It offers a slightly higher light transmittance and screen surface hardness than the resistive screen.

Size/Type: 15.0” multi-point capacitive touch screen
Surface Hardness: 7H
Service Life (MTBF): 50 million touch events
Light Transmittance: > 92%

Size/Type: 15.0” five-wire analog resistive touch screen
Surface Hardness: 3H
Service Life (MTBF): 35 million click events
Light Transmittance: > 81%

Connectivity

There are many connectivity options available on the PPC-10510U-150-C industrial PC. It has 4 x USB Type A connectors configured as HOSTS, 1 x HDMI port, 2 x RJ45 connectors supporting Gigabit Ethernet (GbE), and up to 4 x RS232 connectors, of which two can be configured in RS485 mode.

RS232/485 Connectors

Product has 4 x 9-pin D-sub connectors *(Figure 2 and 2a)* which are configured as RS232 interfaces by default. The two 9-pin D-sub connectors labeled **COM1** and **COM2** can be configured as either RS232 or RS485 communication interfaces. If different configuration is required, please get in touch with Chipsee technical support at **support@chipsee.com**

Figure 877: *Figure 2: 2 x D-sub Connectors: RS232 or RS485*

Figure 878: *Figure 2a: 2 x D-sub Connectors: RS232*

USB HOST Connectors

PPC-10510U-150-C is equipped with 4 x *USB 3.0* HOST connectors *(Figure 3)*. Although fully compatible with USB 2.0 devices, the USB 3.0 interface provides 10 times more data transfer bandwidth than USB 2.0, making it best suited for fast peripherals that can utilize its full potential.

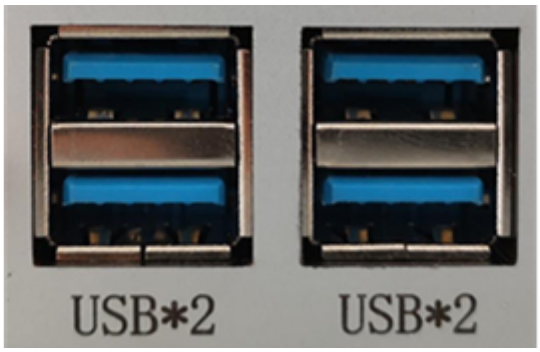

Figure 879: *Figure 3: 4 x USB 3.0 HOST Connectors*

LAN Connectors

2 x **LAN (RJ45) connectors** *(Figure 4)* provide Ethernet connectivity over standardized Ethernet cables. The integrated two-port Ethernet interface supports 10/100/1000BASE-T/TX specifications with automatic speed negotiation and Wake on LAN (WoL) functionality. Power over Ethernet (PoE) is not supported.

Figure 880: *Figure 4: 2 x RJ45 GbE LAN Connectors*

Note

Use CAT5 or better cables to achieve full data throughput over maximum distance defined by the 1000BASE-T standard (100m).

HDMI Connector

The PPC-10510U-150-C Industrial Panel PC is equipped with 1 x **HDMI** connector. The HDMI connector *(Figure 5)* allows connecting an additional (external) monitor. HDMI output resolution can be configured by the software.

Figure 881: *Figure 5: HDMI Connector*

Mounting Procedure

The PPC-10510U-150-C Industrial Panel PC supports VESA 100 x 100 mounting pattern with 4 x M4 screws, enabling simplified installation onto any standard VESA mounting rack. Other mounting options might also be supported according to the table in the Hardware Features section.

You can find detailed information about mounting in the Mount IPC Guide.

Mechanical Specifications

The outer mechanical dimensions of The PPC-10510U-150-C Industrial Panel PC are 376 x 300 x 61.7mm (W x L x H). Please refer to the technical drawing in the figure below for details related to the specific product measurements.

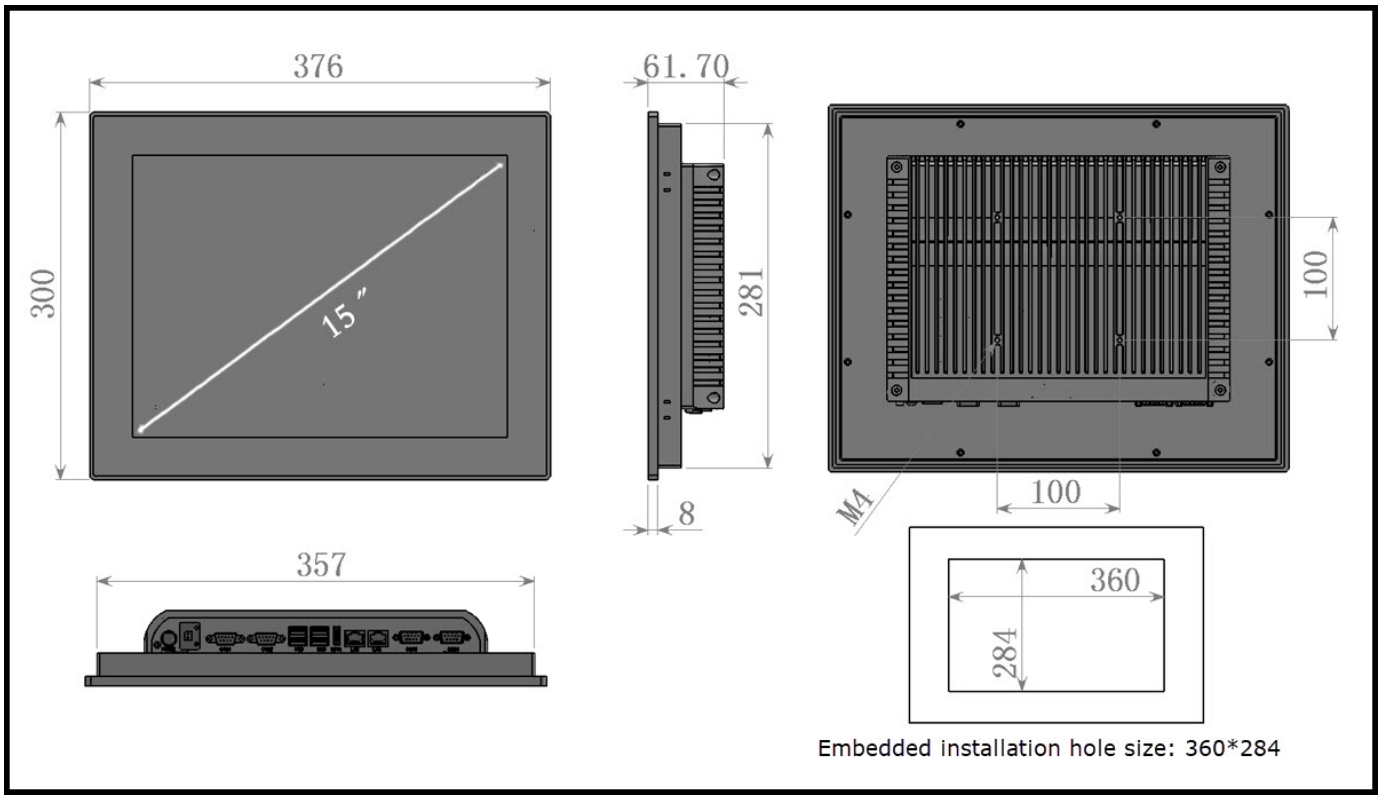

Figure 882: *PPC-10510U-150-C Technical Drawing*

Disclaimer

This document is provided strictly for informational purposes. Its contents are subject to change without notice. Chipsee assumes no responsibility for any errors that may occur in this document. Furthermore, Chipsee reserves the right to alter the hardware, software, and/or specifications set forth herein at any time without prior notice and undertakes no obligation to update the information contained in this document.

While every effort has been made to ensure the accuracy of the information contained herein, this document is not guaranteed to be error-free. Further, it does not offer any warranties or conditions, whether expressed orally or implied in law, including implied warranties and conditions of merchantability or fitness for a particular purpose. We specifically disclaim any liability with respect to this document, and no contractual obligations are formed either directly or indirectly by this document.

Despite our best efforts to maintain the accuracy of the information in this document, we assume no responsibility for errors or omissions, nor for damages resulting from the use of the information herein. Please note that Chipsee products are not authorized for use as critical components in life support devices or systems.

Technical Support

If you encounter any difficulties or have questions related to this document, we encourage you to refer to our other documentation for potential solutions. If you cannot find the solution you're looking for, feel free to contact us. Please email Chipsee Technical Support at **support@chipsee.com**, providing all relevant information. We value your queries and suggestions and are committed to providing you with the assistance you require.