Chipsee

Industrial PC

PPC-CM4-101

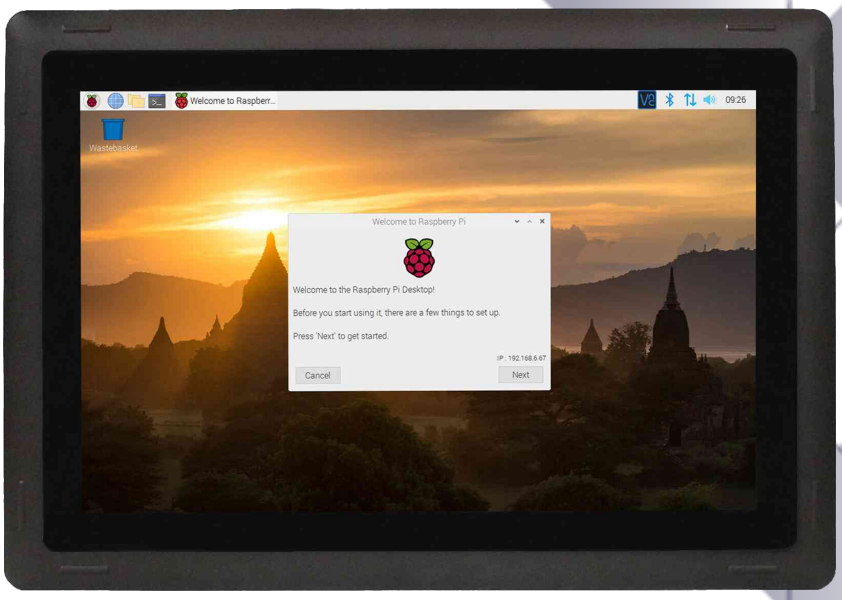

PN: CS12800RA4101P

Content can change at anytime, check our website for latest information of this product.
www.chipsee.com

Contents

PPC-CM4-101 3

1. Product Overview 7

2. Ordering Options 8

2.1. Pi® CM4 Module 8

2.2. Operating System 8

2.3. Optional Features 9

3. Specifications 10

4. Power Input 12

5. Touch Screen 13

6. Connectivity 14

6.1. RS232/RS485/CAN 14

6.2. GPIO Port 16

6.3. USB Connectors 18

6.4. LAN 19

6.5. WiFi & BT Module 20

6.6. 3G/4G/LTE Module 21

6.7. Zigbee Module 22

7. TF Card Slot 24

8. Audio Connectors 25

9. PROG Button 26

10. Mounting Procedure 27

11. Mechanical Specifications 28

11.1. CS12800RA4101P 28

12. 3D Model 29

13. Disclaimer 30

14. Technical Support 30

PPC-CM4-101

Front View

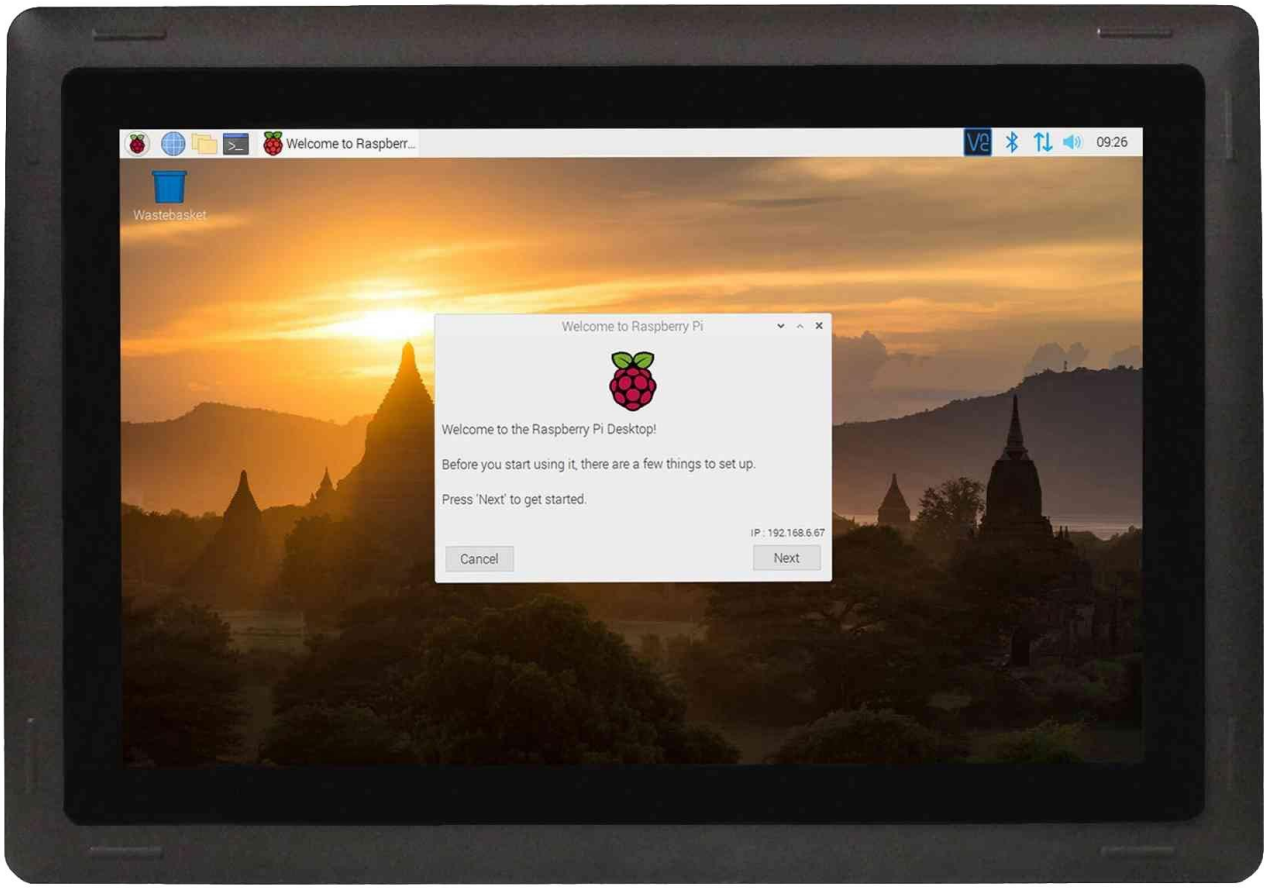

Rear View

Chipsee
Type:CS12800RA4101P
Rev:C111
CM4104016(Debian)
SN:20211227800001406
https://chipsee.com
Origin:Made in China

Side View 1

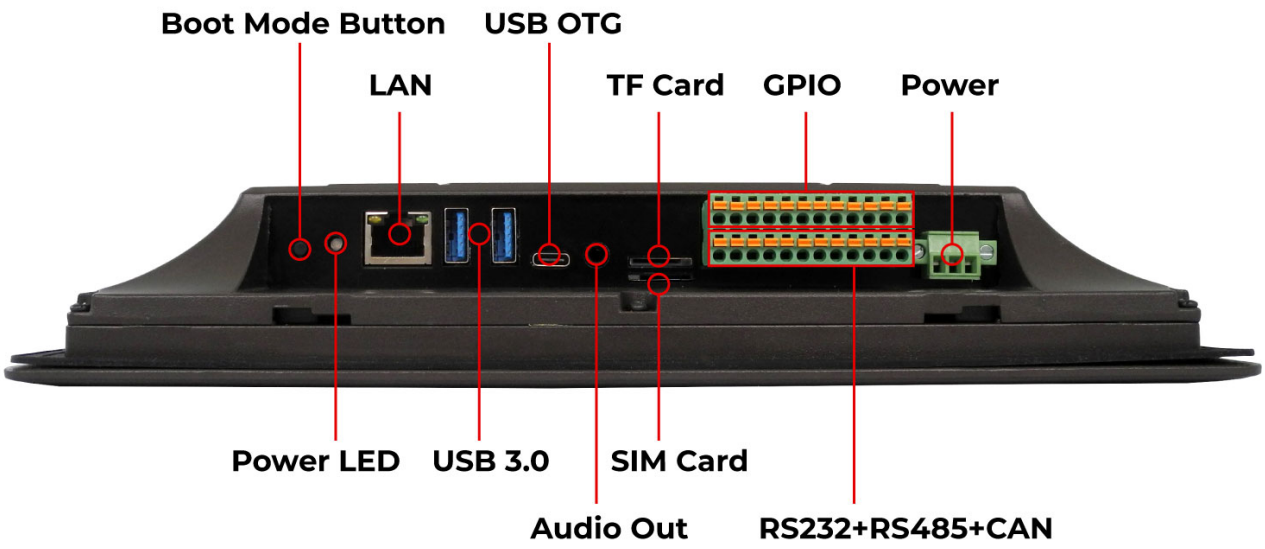
Boot Mode Button
USB OTG
LAN
TF Card
GPIO
Power
Power LED
USB 3.0
SIM Card
Audio Out
RS232+RS485+CAN

Embedded PCB

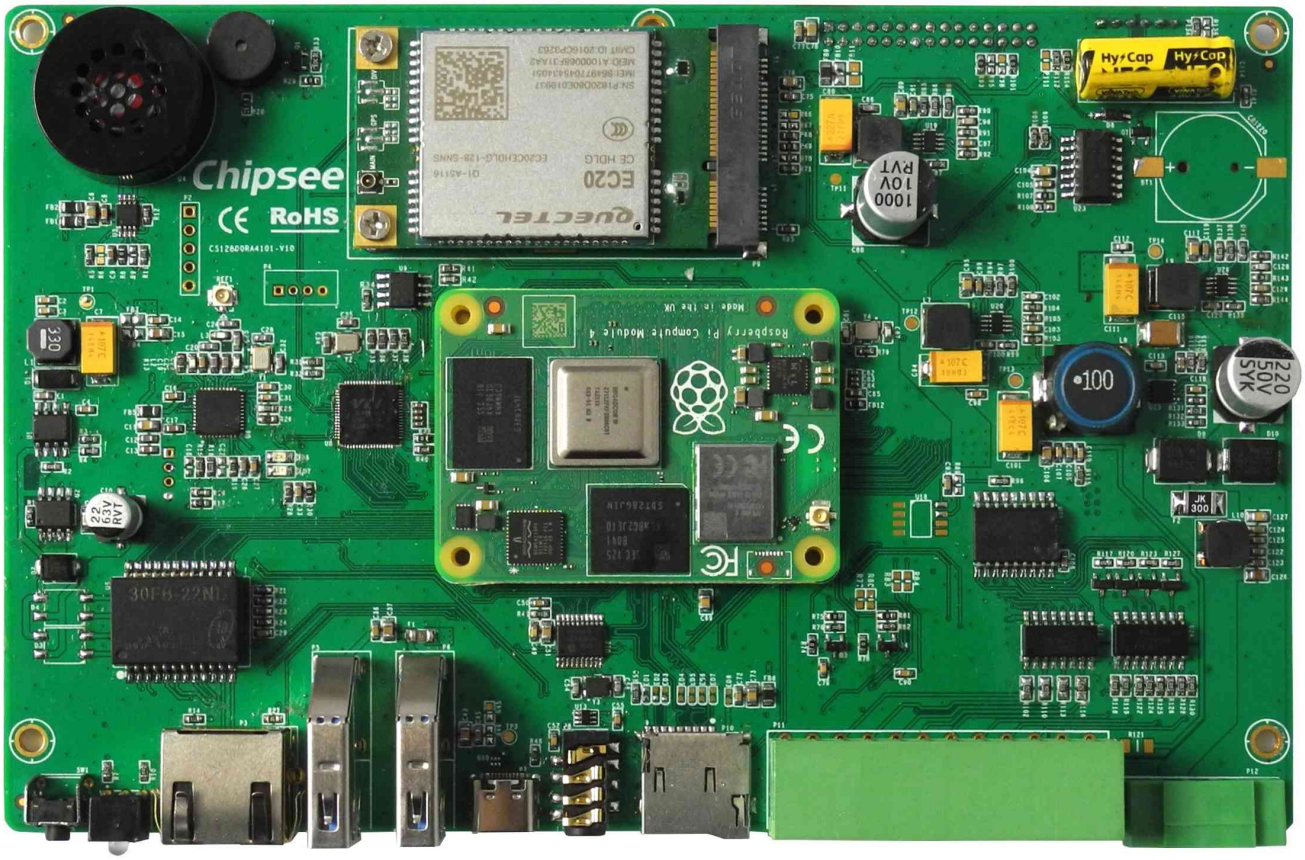

Product Overview

The Cortex®-A72 Raspberry Pi® series PPC-CM4-101 (PN: CS12800RA4101P) is a high-quality industrial Pi PC. This single board computer features a 10.1” Ten-point capacitive touch screen with a resolution of 1280 x 800 pixels and brightness of 400 cd/m^2 Raspberry Pi Display.

Key Applications

- Human Machine Interface HMI
- Process Control
- Process Monitoring
- HMI
- IIoT node
- Environmental Monitoring
- PLC
- Automotive applications
- ATM...

It is available as a device hosed in a casing with bezels, thus facilitating different installation options:

- Installation on an industrial cabinet
- Integration with the existing equipment

The PPC-CM4-101 industrial Pi PC is based around the powerful Raspberry Pi® Compute Module 4, powered by the Quad Cortex®-A72 processor with a processor speed of 1.5GHz.

Ordering Options

Chipsee products can be customized during the ordering process. The product will be shipped with the pre-installed factory defaults if no extra requirements are specified. The table in the Specifications section provides information about the default options bundled with the product.

> **Note**
>
> You can order PPC-CM4-101 from the official Chipsee Store or from your nearest distributor.

Pi® CM4 Module

The Pi® Compute Module 4 appears in different versions depending on the size of the DDR4 and eMMC.
The PPC-CM4-101 industrial Pi PC does not include the CM4 Raspberry Pi® module by default. If you would like to purchase it with a CM4, you can select it at the Chipsee store during the ordering process.

Operating System

This product comes with a pre-installed Raspberry Pi OS. Chipsee software engineers have created all the drivers, so every hardware feature is readily available for any standard development tool.

If your project requires a different OS, please **Contact us**, and we'll make a customized version that suits your needs.

Optional Features

The PPC-CM4-101 industrial Pi PC does not include the 3G/4G/LTE modules by default. These modules are optional and can be selected at the Chipsee store during the ordering process.

> **Warning**
>
> Installation, repair, and maintenance tasks should be performed by trained personnel only.
> Chipsee does not bear any responsibility for damage caused by inadequate handling of the product.

Specifications

The PPC-CM4-101 industrial Pi PC offers a broad range of performance and connectivity options for scalable integration, providing expandability according to future needs. Some of the key features are listed in the table below.

PPC-CM4-101	
CPU	Raspberry Pi® CM4; Quad Cortex-A72 at 1.5GHz
Storage	Support for 1 x TF Card3
RAM	2/4/8 GB, Based on CM4
eMMC	16/32 GB, Based on CM4
Display	10.1" IPS LCD, 1280 x 800 resolution, brightness 400 cd/m^2
Touch	10-point capacitive touch with 1mm Armored Glass
USB	2 x USB 3.0 Host, 1 x USB OTG
LAN	1 x Giga LAN
Audio	3.5mm Audio Out Connector, 2W Speaker Internal
Buzzer	Onboard Buzzer, driven by GPIO
RTC	High accuracy RTC with farad capacitor, can work 1 week after power off **(default)**. High accuracy RTC with lithium coin battery, can work 3 years after power off *(optional)*.
RS232	Default to 2 x RS232, up to 4 x RS232
RS485	Default to 2 x RS4851, these 2 x RS485 can be configured as 2 x RS232
CAN	1 x CAN-BUS
GPIO	8 Channels, 4 Input, 4 Output
I2C	Not Supported
WiFi/BT	Supported but depending on the CM4 selected2
ZIGBEE	Onboard Zigbee module, not mounted by default
HDMI	Not Supported
SATA II	Not Supported
3G/4G/LTE	Supported, not mounted by default
Camera	No
Power Input	From 12V to 36V
Current	800mA Max at 12V
Power Consumption	9.6W Typical

PPC-CM4-101	
Working Temperature	From 0°C to +60°C
OS	Raspberry Pi OS
Dimensions	CS12800RA4101P: 276 x 194 x 46mm
Weight	CS12800RA4101P: 1600g
Mounting Method	CS12800RA4101P: Panel, VESA

Table 428 Key Features

1. The RS485 circuit controls the Input and Output direction automatically, there's no need to control it from within the software.
2. The default product without the CM4 does not include a Wi-Fi/BT module. You can include a CM4 that has the Wi-Fi/BT module at the Chipsee store during the ordering process.
3. This TF card is designed for storage expansion, as the TF card uses the same pins with WiFi, it can't be used with WiFi at the same time

Power Input

The PPC-CM4-101 industrial Pi PC can be powered by a wide range of input voltages: From 12V to 36V DC. It is a **3 Pin, 3.81mm screw terminal** connector. As shown in the figure below.

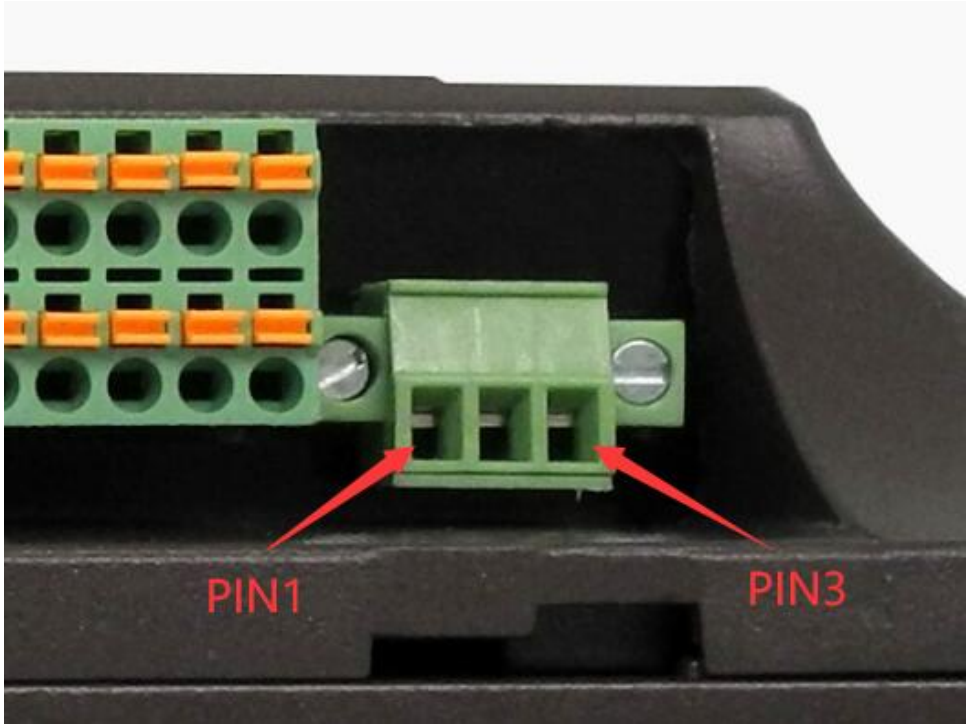

Power Input

Note that the "**+**" sign represents the positive power input, and it is printed both at the casing and as a silk-screen on the board of the embedded version. The "**-**" terminal is shorted to the ground.

Power Input Definition		
Pin Number	**Definition**	**Description**
Pin 1	Positive Input	DC Power **Positive Terminal**
Pin 2	Negative Input	DC Power **Negative Terminal**
Pin 3	Ground	**Power System Ground**

Table 429 Power Connector

> **Note**
>
> The system ground "**G**" is connected to power negative "**-**" on board.

Touch Screen

The PPC-CM4-101 industrial Pi PC uses a 10-point capacitive touch with 1mm Armored Glass screen. However, the Raspberry Pi OS supports only One-Point touch.
The figure below shows the capacitive touch screen connected to the motherboard via the USB connector.

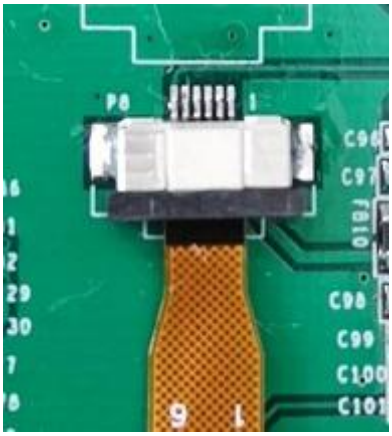

Capacitive Touch Connector

Attention

A capacitive touch screen is susceptible to power noise and Electromagnetic Radiation (EMR). It may cause LCD ripples or even capacitive touch malfunction. If using a capacitive multi-touch test application, you might notice the touch points float erratically across the display. There are several solutions to this problem:

1. Use a high-quality Power Adapter Unit (PSU) with low EMR. You can also provide power from a battery.
2. Make sure that the PPC-CM4-101 Power Input connector (pin 3) is properly connected to the Power System Ground to provide sufficient EMI shielding and eliminate the problem entirely.
3. Bad GND problems can also be confirmed by touching pin 3 of the Power Input connector with one hand while operating the capacitive touch screen with the other hand. In this case, the operator's body acts as the Power System Ground.

Connectivity

There are many connectivity options available on the PPC-CM4-101 industrial Pi PC. It has 2 x USB 3.0 Host, 1 x USB OTG, 1 x Giga LAN (RJ45) Ethernet connector supporting up to 1 Gbps, and 4 x UART and 1 x CAN terminals (RS232/RS485/CAN).

RS232/RS485/CAN

The serial communication interfaces (RS485, RS232, and CAN) are routed to a phoenix terminal, as illustrated in the figure below.

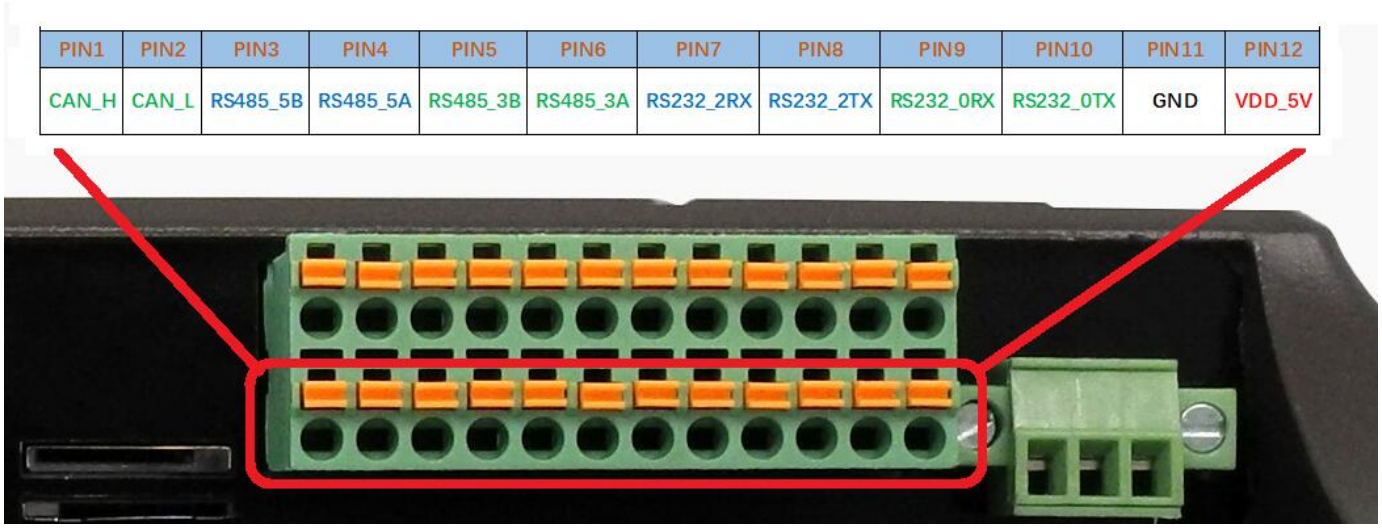

RS232-RS485-CAN on the PPC-CM4-101 *Industrial PC*

Attention

1. RS485_3 and RS485_5 can control the input and output direction automatically. There's no need to control it from within the software.
2. The 120Ω match resistor for RS485 is **already** mounted by default.
3. The 120Ω match resistor for CAN is **NOT** mounted by default. Be sure to mount the match resistor when testing CAN.
4. The 2 x RS485 can be configured to 2 x RS232, if you want a custom configuration, you can contact us when placing an order.

The table below offers more detailed description of every pin and its definition:

RS232 / RS485 / CAN Pin Definition:		
Pin Number	**Definition**	**Description**
Pin 1	CAN_H	CAN BUS "H" signal
Pin 2	CAN_L	CAN BUS "L" signal
Pin 3	RS485_5-	CPU UART5, RS485 –(B) signal

RS232 / RS485 / CAN Pin Definition:		
Pin 4	RS485_5+	CPU UART5, RS485 +(A) signal
Pin 5	RS485_3-	CPU UART3, RS485 –(B) signal
Pin 6	RS485_3+	CPU UART3, RS485 +(A) signal
Pin 7	RS232_2_RXD	CPU UART2, RS232 RXD signal
Pin 8	RS232_2_TXD	CPU UART2, RS232 TXD signal
Pin 9	RS232_0_RXD	CPU UART0, RS232 RXD signal
Pin 10	RS232_0_TXD	CPU UART0, RS232 TXD signal
Pin 11	GND	System Ground
Pin 12	+5V	System +5V Power Output, No more than 1A Current output

Table 430 Connectivity Section

GPIO Port

The PPC-CM4-101 industrial Pi PC has a **phoenix connector**, as shown in the figure below. The table below gives details about the definition of every Pin.

Attention

1. In order to use the Isolated Output, you need to add an external Isolated Power to the VDD_ISO and GND_ISO. The power voltage should not exceed 24V.
2. The output current can achieve 500mA for every channel, but it also depends on the isolated power that is connected.
3. In order to use the Isolated Input, you need to add a signal to the ISO_InputX and GND_ISO. A 2.4KΩ resistor, as R6, has been added to limit the input current, as shown in the figure below. This resistor should work well for the 5-24V input signal. If your input signal is less than 5V, please change this input resistor. The reduced schematic is for reference purpose, if you need the precise resistor schematic, please contact us.

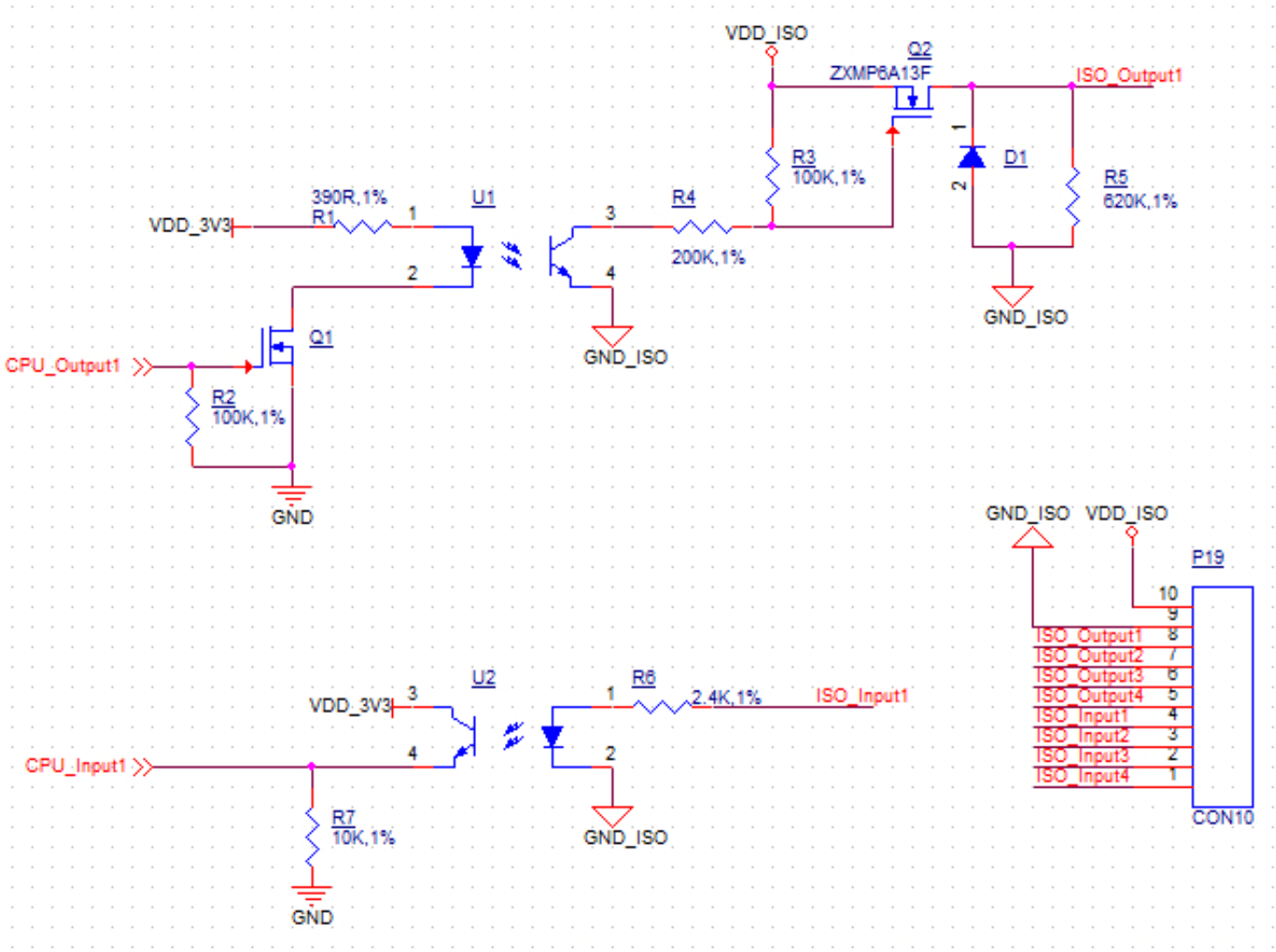

Isolated GPIO reduced schematic

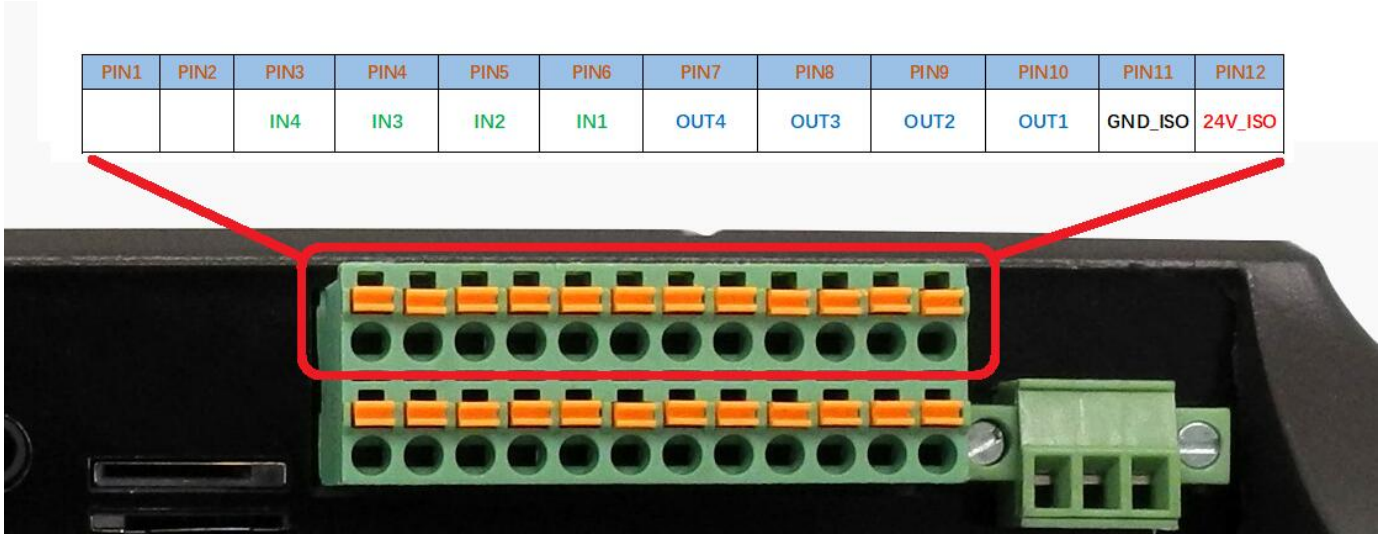

GPIO Connector

GPIO Connector Pin Definition:		
Pin Number	**Definition**	**Description**
Pin 12	24V_ISO	Isolated Power +24V Input
Pin 11	GND_ISO	Isolated Ground
Pin 10	OUT1	Isolated Output 1
Pin 9	OUT2	Isolated Output 2
Pin 8	OUT3	Isolated Output 3
Pin 7	OUT4	Isolated Output 4
Pin 6	IN1	Isolated Input 1
Pin 5	IN2	Isolated Input 2
Pin 4	IN3	Isolated Input 3
Pin 3	IN4	Isolated Input 4

Table 431 GPIO Connector Pin-out

USB Connectors

There are 2 x USB 3.0 Host, 1 x USB OTG onboard, as shown in the figure below.

USB HOST Connectors

Attention

1. These two USB host connectors can drive 500mA for each channel at most.

The product has one USB Type-C OTG connector that works as a slave by default. You can use it to establish a connection with the host PC and for downloading the system to the eMMC of CM4 module.

USB Type-C OTG Connector

Warning

1. Be careful not to touch surrounding electronic components accidentally while plugging in USB devices into the embedded Industrial PC version.
2. Remember to unplug the Type-C cable after flashing OS, otherwise the USB hosts won't work.

LAN

The 1 x Giga LAN provides Ethernet connectivity over standardized Ethernet cables as shown in the figure below. The integrated Ethernet interface supports up to 1 Gbps data throughput. These Giga LAN signals come from the CM4 module directly.

RJ45 LAN Connector

Note

Use CAT5 or better cables to achieve full data throughput over maximum distance defined by the 1000BASE-T standard (100m).

WiFi & BT Module

The default PPC-CM4-101 without the CM4 does not include a Wi-Fi/BT module.
If you include a CM4 that has the Wi-Fi/BT module, the product will have Wi-Fi/BT feature.
The enclosed (CS12800RA4101P) variant of the product also includes an SMA connector for an external WiFi/BT antenna, as illustrated in the figure below.

WiFi+BT Antenna

Attention

The product does not come shipped with the Wi-Fi/BT module by default.

3G/4G/LTE Module

The PPC-CM4-101 industrial Pi PC is equipped with a **mini-PCIe connector** that can connect to a 3G/4G/LTE module. The customer will also need a SIM Card Holder and a 3G/4G/LTE antenna to ensure 3G/4G/LTE works on the PPC-CM4-101. SIM card does **NOT** support hot plug. **Power off** before inserting or removing SIM card.

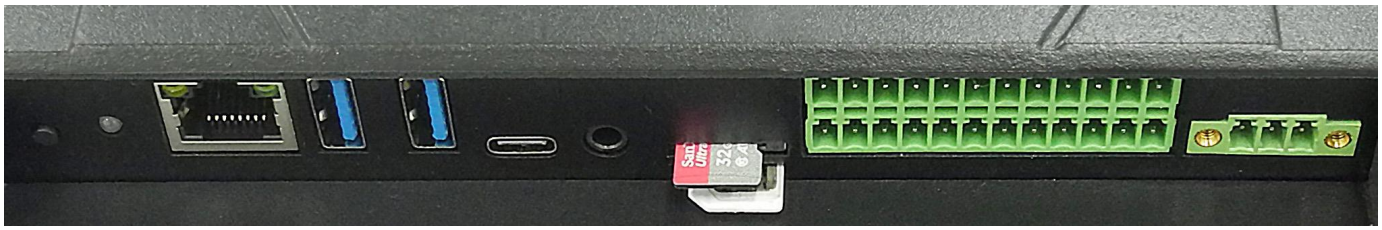

SIM Card Direction

Figure 911: *3G/4G/LTE Module*

Figure 912: *SIM Card Holder and 3G/4G/LTE Antenna*

Attention

The product does not come shipped with the 3G/4G/LTE module by default. If you need to use 3G/4G/LTE, you can contact us when placing an order, we can install the necessary hardware for you.

Zigbee Module

The PPC-CM4-101 industrial Pi PC supports an onboard Zigbee module. The Zigbee controller is TI CC2531, and the Raspberry Pi forum supports it.

For CS12800RA4101P, there is a connector on the backside of the case that you can use to connect the external Zigbee antenna, as described in the figure below. If you need to use WiFi/BT and Zigbee together, we can customized the case and add another SMA connector for you, usually across the rear to the opposite of the current SMA.

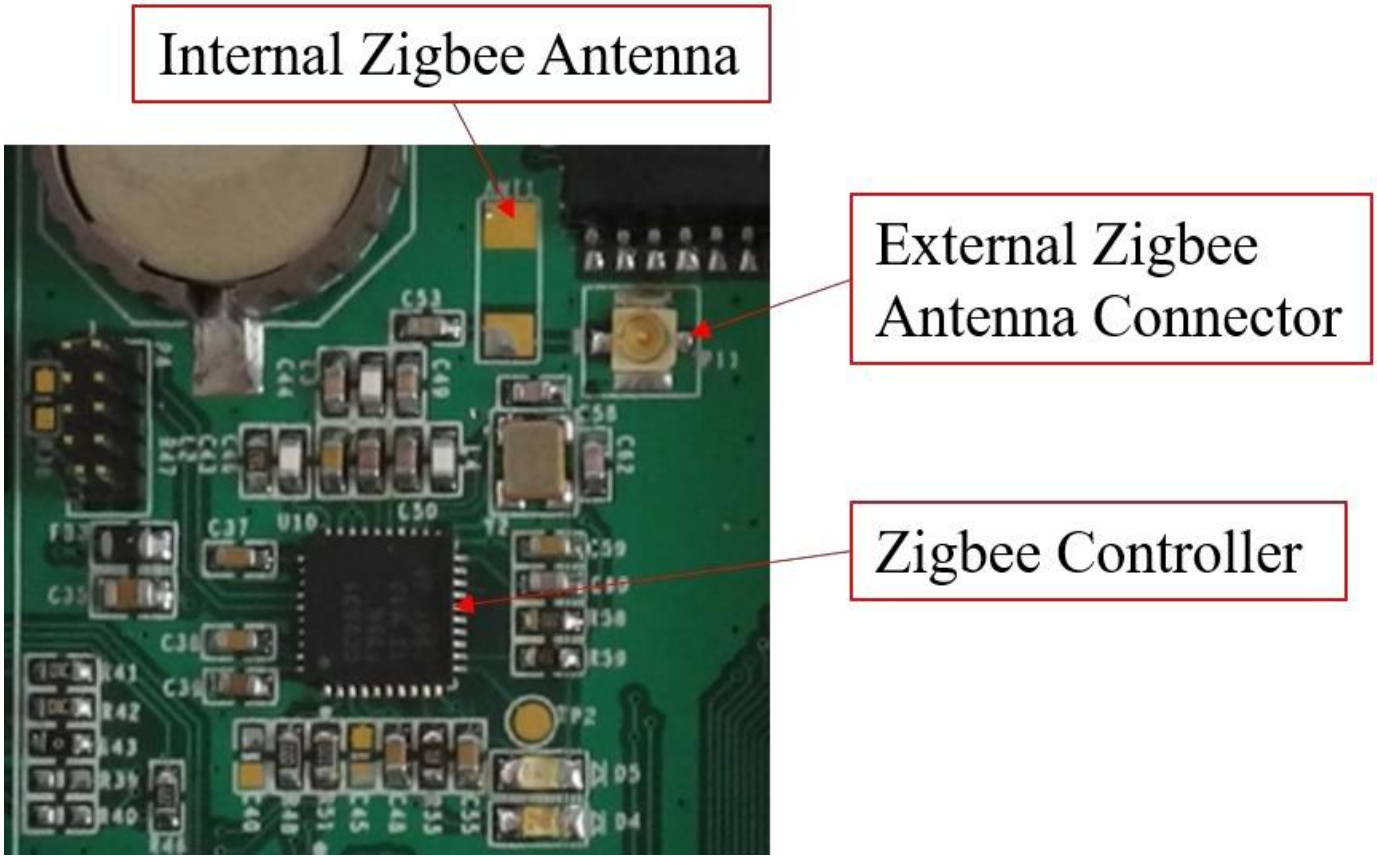

Figure 913: *Zigbee controller*

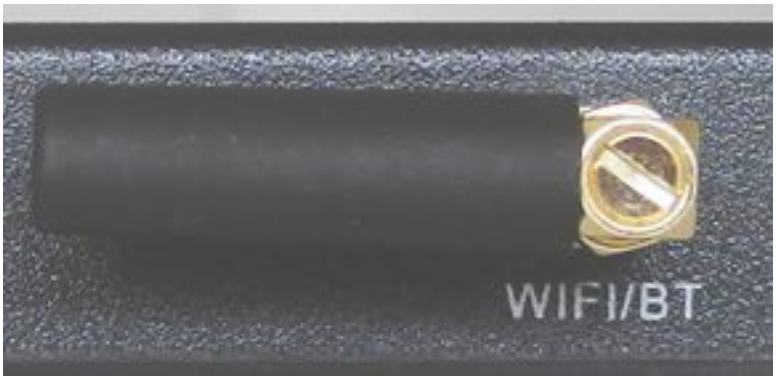

Zigbee Antenna

Attention

> The product does not come with the Zigbee module by default.

TF Card Slot

The PPC-CM4-101 industrial Pi PC features 1 x **TF Card (micro SD) slot**. A slot can address up to 128GB of memory.

TF (micro SD) Card Slot

Attention

1. The SD is used for memory extension. It can't be used for system boot-up.
2. This storage extension SD uses the same pins as WiFi on CM4. SD storage and WiFi **can't** be used at the same time.
3. The product does not come shipped with the TF card by default.

Audio Connectors

The PPC-CM4-101 industrial Pi PC features some audio peripherals. It has 1 x **3.5mm audio output jack**.
Also, the PPC-CM4-101 industrial Pi PC has a miniature 2W internal speaker for audio reproduction, as well as a small buzzer for alarm/notification sounds.

Audio Connector

Attention

By plugging in the headphone cable, the internal speaker will be disabled automatically.

PROG Button

The PPC-CM4-101 industrial Pi PC has one button for entering usb download mode, as shown in the figure below.
When booting **with** the button being pressed, the Raspberry Pi will boot from the USB connector. You can use this feature to download the OS software to the internal eMMC.
When booting **without pressing** the button, the Raspberry Pi will boot from the internal eMMC.

There is no need to press the button during regular operation. However, if you need to reinstall the OS, please refer to the detailed information on how to reflash the OS from the Software Documentation.

PROG Button

Mounting Procedure

The PPC-CM4-101 industrial Pi PC can be mounted with 4 x **M4** (6mm) screws using the **VESA** (100x100mm or 75x75mm) mount.

The PPC-CM4-101 industrial Pi PC can be mounted with **panel mount** method, enabling simplified installation onto any standard mounting fixture.

> **Attention**
>
> Please make sure the display is not exposed to high pressure when mounting into an enclosure.

You can find detailed information about mounting in the Mount IPC Guide.

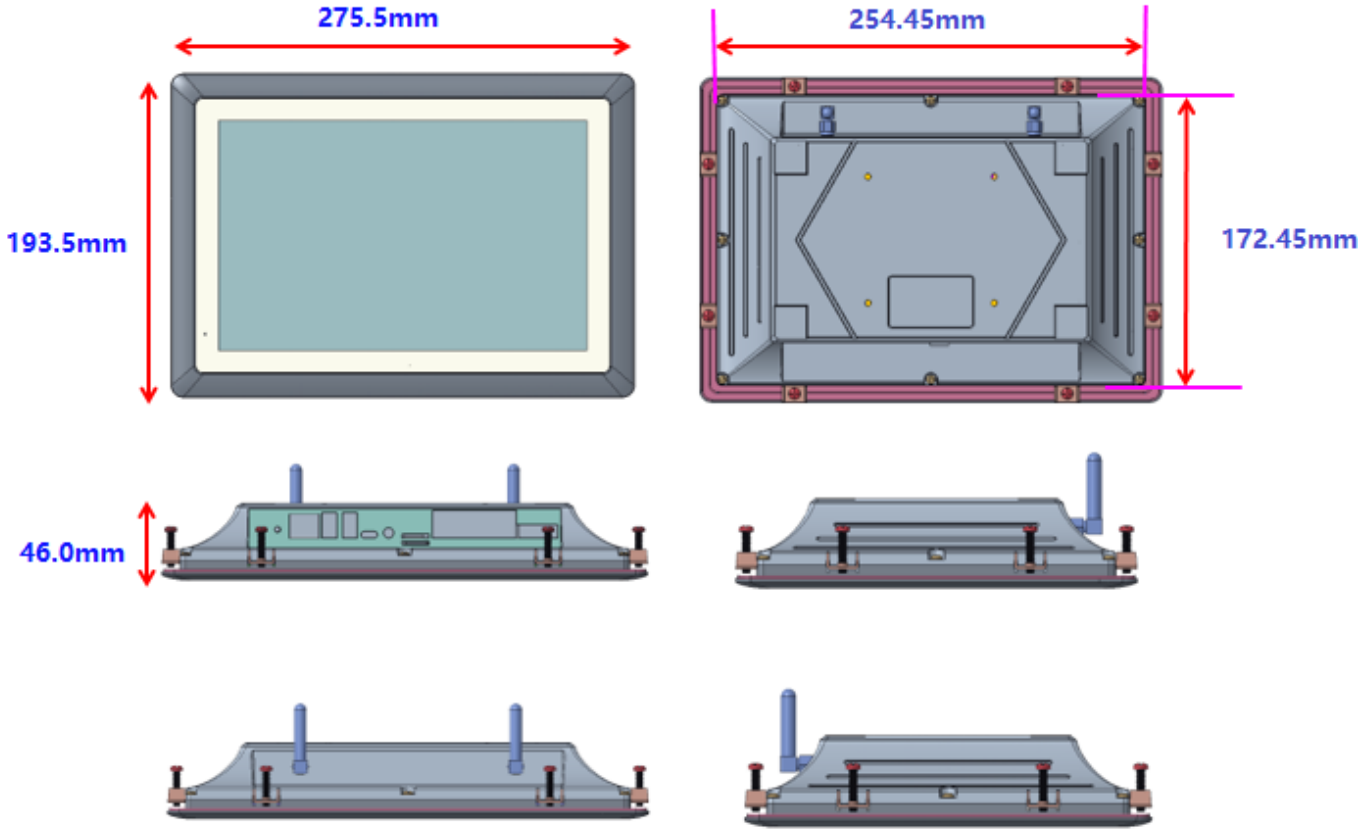

Panel mounting

Mechanical Specifications

CS12800RA4101P

For CS12800RA4101P, the outer mechanical dimensions are 276 x 194 x 46mm (W x L x H).

The cutout dimensions of this 10.1 inch product is 258mm x 176mm.

3D Model

PPC-CM4-101 3D model can be viewed in the online doc in a web browser, **if you are reading from the PDF** version, please visit the online doc PPC-CM4-101, select hardware documentation, drag the navigation bar to the 3D Model section.

Disclaimer

This document is provided strictly for informational purposes. Its contents are subject to change without notice. Chipsee assumes no responsibility for any errors that may occur in this document. Furthermore, Chipsee reserves the right to alter the hardware, software, and/or specifications set forth herein at any time without prior notice and undertakes no obligation to update the information contained in this document.

While every effort has been made to ensure the accuracy of the information contained herein, this document is not guaranteed to be error-free. Further, it does not offer any warranties or conditions, whether expressed orally or implied in law, including implied warranties and conditions of merchantability or fitness for a particular purpose. We specifically disclaim any liability with respect to this document, and no contractual obligations are formed either directly or indirectly by this document.

Despite our best efforts to maintain the accuracy of the information in this document, we assume no responsibility for errors or omissions, nor for damages resulting from the use of the information herein. Please note that Chipsee products are not authorized for use as critical components in life support devices or systems.

Technical Support

If you encounter any difficulties or have questions related to this document, we encourage you to refer to our other documentation for potential solutions. If you cannot find the solution you're looking for, feel free to contact us. Please email Chipsee Technical Support at **support@chipsee.com**, providing all relevant information. We value your queries and suggestions and are committed to providing you with the assistance you require.