Industrial PC

CS-CM5-BOX

PN: CSRA5BOX

Content can change at anytime, check our website for latest information of this product.
www.chipsee.com

Contents

CS-CM5-BOX 3

1. Product Overview 7

2. Ordering Options 8

2.1. Pi® CM5 Module 8

2.2. Operating System 8

2.3. Optional Features 9

3. Specifications 10

4. Power Input 12

4.1. Ignition Signal 14

5. Connectivity 16

5.1. RS232/RS485/CAN 16

5.2. GPIO Port 19

5.3. USB Connectors 21

5.4. LAN 23

5.5. WiFi & BT Module 24

5.6. 3G/4G/LTE Module 25

5.7. M.2 Module 27

5.8. Camera Connector 28

6. TF Card Slot 30

7. Audio Connectors 31

8. HDMI Connector 32

9. PROG Button 33

10. Mounting Procedure 34

11. Mechanical Specifications 35

12. Disclaimer 36

13. Technical Support 36

CS-CM5-BOX

Front View

Rear View

Chipsee
PN:CSRA5BOX
Rev:C111(CM5104032)
OS:Raspberry Pi OS
SN:20250219150000016
https://chipsee.com
Origin:Made in China

Side View 1

WiFi
Audio
HDMI-D
Type-C
TF
SIM
USB HOST
LAN1
LAN0
PROG
DC:9~30V
4G

Side View 2

CAN1_H
CAN1_L
RS485_5-
RS485_5+
RS232_5_RXD
RS232_5_TXD
RS485_3-
RS485_3+
RS232_3_RXD
RS232_3_TXD
RS232_2_RXD
RS232_2_TXD
RS232_0_RXD
RS232_0_TXD
GND
+5V
VDD_ISO
GND_ISO
OUT1
OUT2
OUT3
OUT4
IN1
IN2
IN3
IN4
DC:9~30V
+ - G

Product Overview

The Cortex®-A76 Raspberry Pi® series CS-CM5-BOX (PN: CSRA5BOX) is a high-quality fanless industrial Pi single board computer.

Key Applications

- Process Control
- Process Monitoring
- IIoT node
- Environmental Monitoring
- PLC
- Automotive applications
- ATM...

The CS-CM5-BOX industrial Pi PC is based around the powerful Raspberry Pi® Compute Module 5, powered by the Quad Cortex®-A76 processor with a processor speed of 2.4GHz.

Ordering Options

Chipsee products can be customized during the ordering process. The product will be shipped with the pre-installed factory defaults if no extra requirements are specified. The table in the Specifications section provides information about the default options bundled with the product.

> **Note**
>
> You can order CS-CM5-BOX from the official Chipsee Store or from your nearest distributor.

Pi® CM5 Module

The Pi® Compute Module 5 appears in different versions (different RAM size: 2GB, 4GB, or 8GB SDRAM based on CM5 and different eMMC size: 0GB, 16GB, 32GB, or 64GB based on CM5).

The CS-CM5-BOX industrial Pi PC does not include the CM5 Raspberry Pi® module by default.

If you would like to purchase it with a CM5, you can select it at the Chipsee store during the ordering process.

Operating System

This product comes with a pre-installed Raspberry Pi OS (Software Documentation). Chipsee software engineers have created all the drivers, so every hardware feature is readily available for any standard development tool.

If your project requires a different OS, please **Contact us**, and we'll make a customized version that suits your needs.

Optional Features

The CS-CM5-BOX industrial Pi PC does not include the 3G/4G/LTE modules by default. These modules are optional and can be selected at the Chipsee store during the ordering process.

The product has an **optional** PCIe Gen 2 × 1 (5Gbps), M.2 M-Key 2230/2242 socket (PCIe 3.0 is possible but experimental for CM5), you can use it with your NVMe SSD or other modules that can fit in the slot and supports the protocol. By default the NVMe SSD is not mounted; by default M.2 slot is not mounted. Please contact us when placing an order if you need the M.2 slot.

> ⚠ **Warning**
>
> Installation, repair, and maintenance tasks should be performed by trained personnel only.
> Chipsee does not bear any responsibility for damage caused by inadequate handling of the product.

Specifications

The CS-CM5-BOX industrial Pi PC offers a broad range of performance and connectivity options for scalable integration, providing expandability according to future needs. Some of the key features are listed in the table below.

CS-CM5-BOX	
CPU	Raspberry Pi® CM5/CM5Lite; BCM2712 Quad(4) Core Cortex-A76 at 2.4GHz
RAM	2GB, 4GB, or 8GB SDRAM based on CM5
eMMC	0GB, 16GB, 32GB, or 64GB based on CM5
Display	N/A
Touch	N/A
Storage	Support for 1 x TF Card1
PCIe	PCIe Gen 2 × 1 (5Gbps), M.2 M-Key 2230/2242 socket (**optional**)
USB	1 x USB 3.0 type-A Host, 1 x USB 2.0 type-A Host, 1 x USB type-C OTG
LAN	2 x Giga LAN
Audio	3.5mm Audio Out Connector, 2W Speaker Internal
Buzzer	Onboard Buzzer, driven by GPIO
RTC	High accuracy RTC with farad capacitor, can work 1 week after power off (default). High accuracy RTC with lithium coin battery (CR1220), can work 3 years after power off (optional).
RS232	Default to 2 x RS232, up to 4 x RS232
RS485	Default to 2 x RS4852, these 2 x RS485 can be configured as 2 x RS232
CAN	1 x CAN FD BUS, Arbitration Bit Rate up to 1Mbps, Data Bit Rate up to 8Mbps
GPIO	8 Channels, 4 Input, 4 Output
I2C	Not Supported
WiFi/BT	Optional (Depends on CM5)3
ZIGBEE	No
HDMI	1 x HDMI-D (Micro HDMI) 2.0 out, can be driven up to 4K 60FPS
3G/4G/LTE	Supported, not mounted by default
Camera	Yes, not mounted by default.
Power Input	From 9V to 30V (supports optional 24V ignition signal)
Current	800mA max at 12V, 500mA typical at 12V
Power Consumption	9.6W max, 6W typical

CS-CM5-BOX	
Working Temperature	From -20°C to +85°C
OS	Raspberry Pi OS
Dimensions	CSRA5BOX: 209 x 125 x 37.3mm
Weight	CSRA5BOX: 900g
Mounting Method	CSRA5BOX: Rear, VESA

Table 396 Key Features

1. TF card slot, **only** used with CM5 Lite to boot system, **cannot** be used as external storage for CM5
2. The RS485 circuit controls the Input and Output direction automatically, there's no need to control it from within the software.
3. The default product without the CM5 does not include a Wi-Fi/BT module. You can include a CM5 that has the Wi-Fi/BT module at the Chipsee store during the ordering process.

Power Input

The CS-CM5-BOX industrial Pi PC can be powered by a wide range of input voltages: From 9V to 30V (supports optional 24V ignition signal) DC.

There are two DC input interfaces on this device: a **3-pin, 3.81mm screw terminal** connector, and a **2.1mm DC input head**. As shown in the figure below.

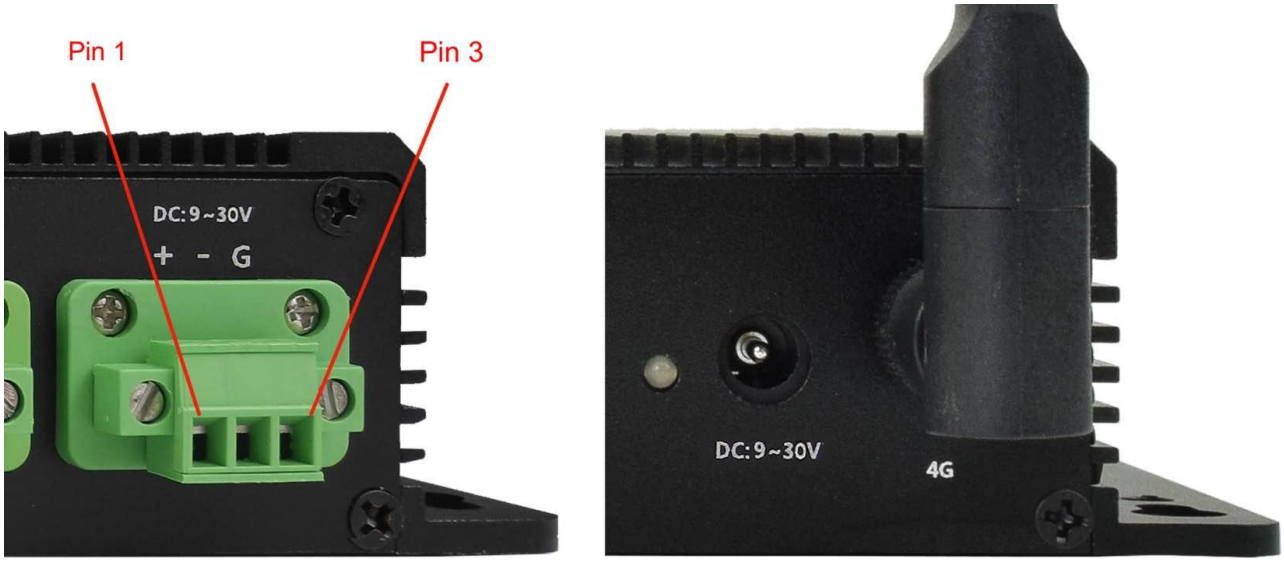

Power Input

Note that the "**+**" sign represents the positive power input, the "**-**" terminal is shorted to the ground.

Power Input Definition		
Pin Number	**Definition**	**Description**
Pin 1	Positive Input	DC Power **Positive Terminal**
Pin 2	Negative Input	DC Power **Negative Terminal**
Pin 3	Ground	**Power System Ground**

Table 397 Power Connector

> **Note**
>
> The system ground "**G**" is connected to power negative "**-**" on board.

For a proper 2.1mm x 5.5mm x 9.5mm DC power connector, refer to the figure below:

DC Jack

Ignition Signal

The product has a “ignition signal” **optional** feature. By default the ignition signal is not installed. If you need this feature you can contact us when placing an order. In this setup, Pin 3 is the ignition signal pin.

The DC jack doesn’t support ignition signal.

To use this feature, apply a 24V DC input (relative to -) to Pin 3. If Pin 3 detects a low input voltage, the product will be shutdown. If Pin 3 detects a high input voltage, the product will be boot and running.

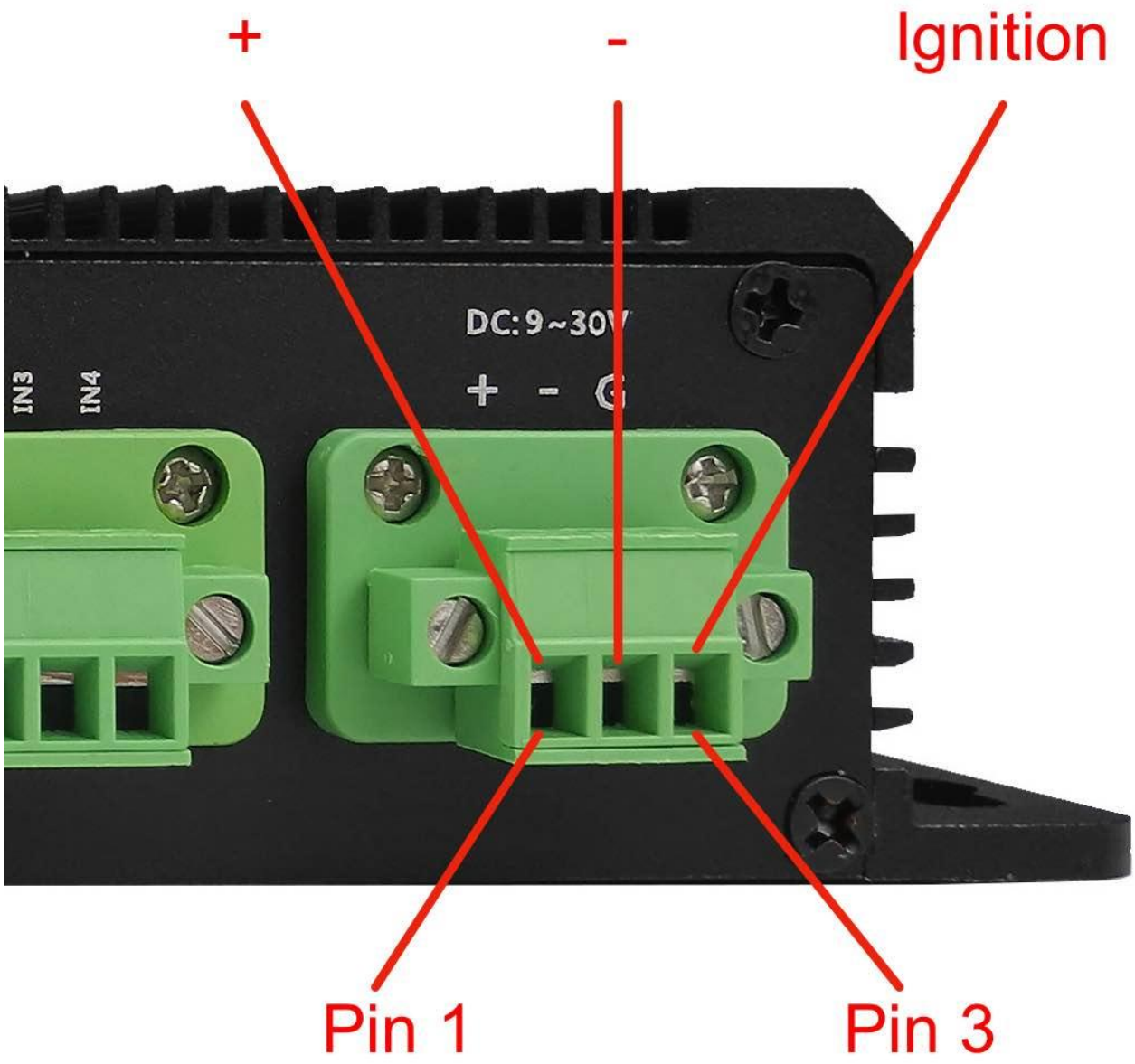

Power Input (with Ignition Signal)

Power Input Definition		
Pin Number	**Definition**	**Description**

Power Input Definition		
Pin 1	Positive Input	DC Power **Positive Terminal**
Pin 2	Negative Input	DC Power **Negative Terminal**
Pin 3	Ignition	**Ignition Signal**

Table 398 Power Connector with Ignition Signal

Connectivity

There are many connectivity options available on the CS-CM5-BOX industrial Pi PC. It has 1 x USB 3.0 type-A Host, 1 x USB 2.0 type-A Host, 1 x USB type-C OTG, 2 x Giga LAN (RJ45) Ethernet connector supporting up to 1 Gbps, and 4 x UART and 1 x CAN FD terminals (RS232/RS485/CAN).

RS232/RS485/CAN

The serial communication interfaces (RS485, RS232, and CAN) are routed to a 16-pin 3.81mm terminal, as illustrated in the figure below.

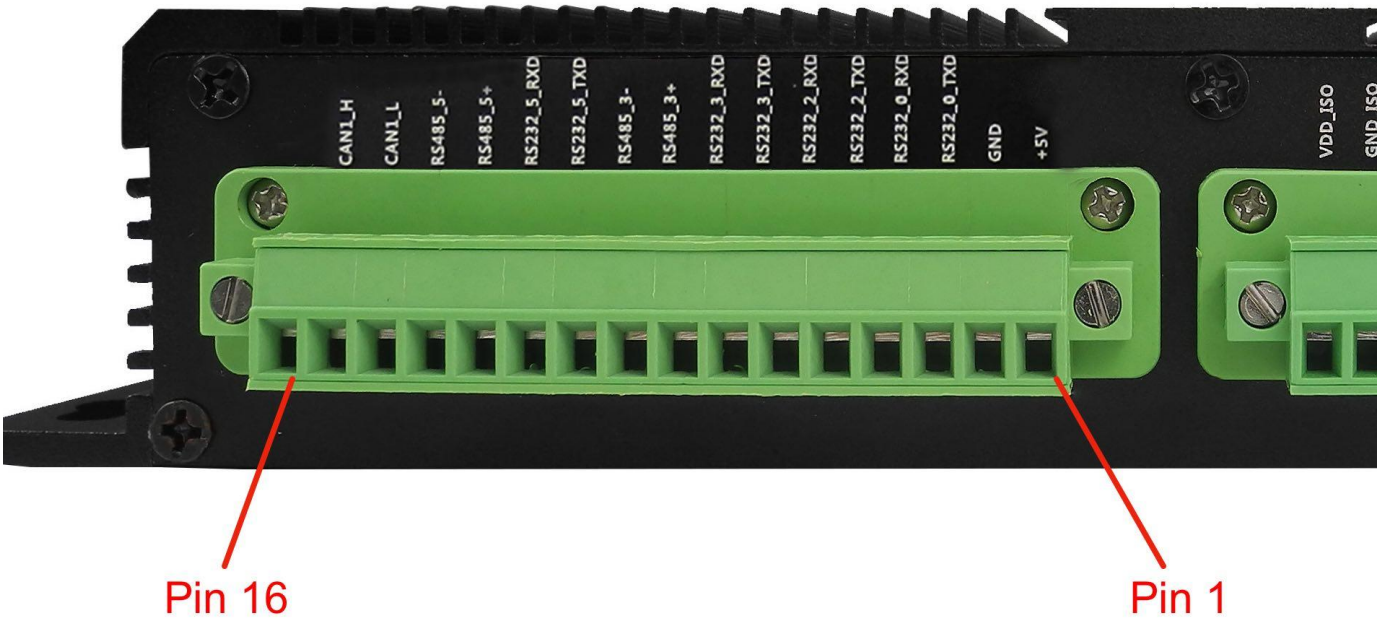

RS232-RS485-CAN on the CS-CM5-BOX *Industrial PC*

RS232 / RS485 / CAN Pin Definition:			
Pin Number	**Definition**	**Description**	**OS Node**
Pin 16	CAN_H	CPU SPI0, CAN BUS “H” signal	CAN0
Pin 15	CAN_L	CPU SPI0, CAN BUS “L” signal	
Pin 14	RS485_5-	CPU UART5, RS485 –(B) signal	/dev/ ttyAMA4
Pin 13	RS485_5+	CPU UART5, RS485 +(A) signal	
Pin 12	RS232_5_RXD	CPU UART5, RS232 RXD signal	/dev/ ttyAMA4
Pin 11	RS232_5_TXD	CPU UART5, RS232 TXD signal	

RS232 / RS485 / CAN Pin Definition:			
Pin 10	RS485_3-	CPU UART3, RS485 –(B) signal	/dev/ ttyAMA2
Pin 9	RS485_3+	CPU UART3, RS485 +(A) signal	
Pin 8	RS232_3_RXD	CPU UART3, RS232 RXD signal	/dev/ ttyAMA2
Pin 7	RS232_3_TXD	CPU UART3, RS232 TXD signal	
Pin 6	RS232_2_RXD	CPU UART2, RS232 RXD signal	/dev/ ttyAMA1
Pin 5	RS232_2_TXD	CPU UART2, RS232 TXD signal	
Pin 4	RS232_0_RXD	CPU UART0, RS232 RXD signal, Debug Port	/dev/ ttyAMA0
Pin 3	RS232_0_TXD	CPU UART0, RS232 TXD signal, Debug Port	
Pin 2	GND	System Ground	
Pin 1	+5V	System +5V Power Output, No more than 1A Current output	

Table 399 RS232 / RS485 / CAN Pin Definition for 7 inch/Box products

Attention

1. RS485_3 and RS485_5 can control the input and output direction automatically. There's no need to control it from within the software.
2. The 120Ω match resistor for RS485 is **NOT** mounted by default.
3. The 120Ω match resistor for CAN is **NOT** mounted by default. Be sure to mount the match resistor when testing CAN.
4. RS485_3 and RS232_3 share UART3 and can't work at the same time; RS485_5 and RS232_5 share UART5 and can't work at the same time. Meaning the product provides 4 x RS232 + 0 x RS485, or 2 x RS232 + 2 x RS485, or 3 x RS232 + 1 x RS485.

GPIO Port

The CS-CM5-BOX industrial Pi PC has a 10 Pin 3.81mm **GPIO Connector**, as shown in the figure below. The table below gives details about the definition of every Pin.

Attention

1. In order to use the Isolated Output, you need to add an external Isolated Power to the VDD_ISO and GND_ISO. The power voltage should not exceed 24V.
2. The output current can achieve 500mA for every channel, but it also depends on the isolated power that is connected.
3. In order to use the Isolated Input, you need to add a signal to the ISO_InputX and GND_ISO. A 2.4KΩ resistor, as R6, has been added to limit the input current, as shown in the figure below. This resistor should work well for the 5-24V input signal. If your input signal is less than 5V, please change this input resistor. The reduced schematic is for reference purpose, if you need the precise resistor schematic, please contact us.

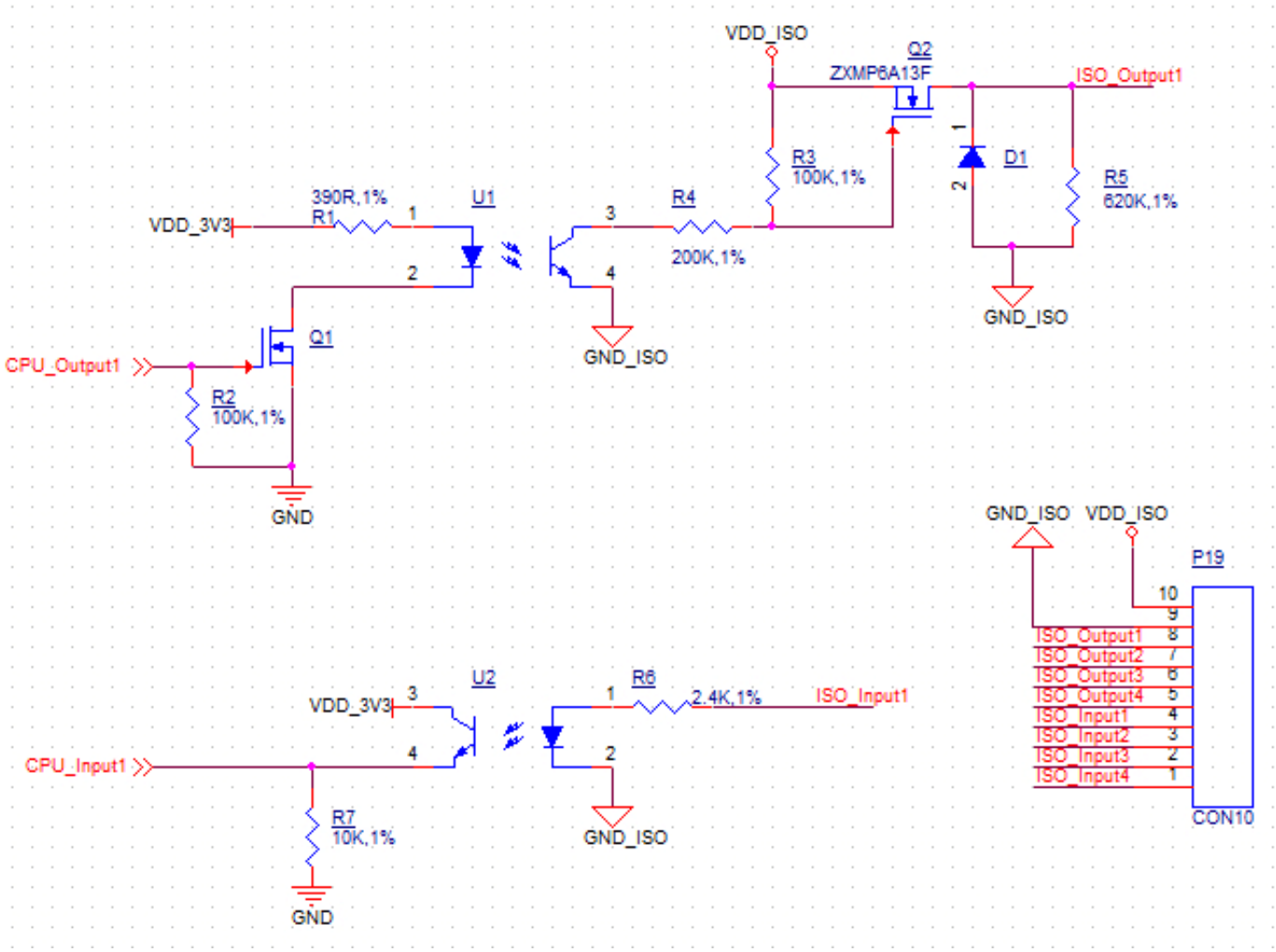

Isolated GPIO reduced schematic

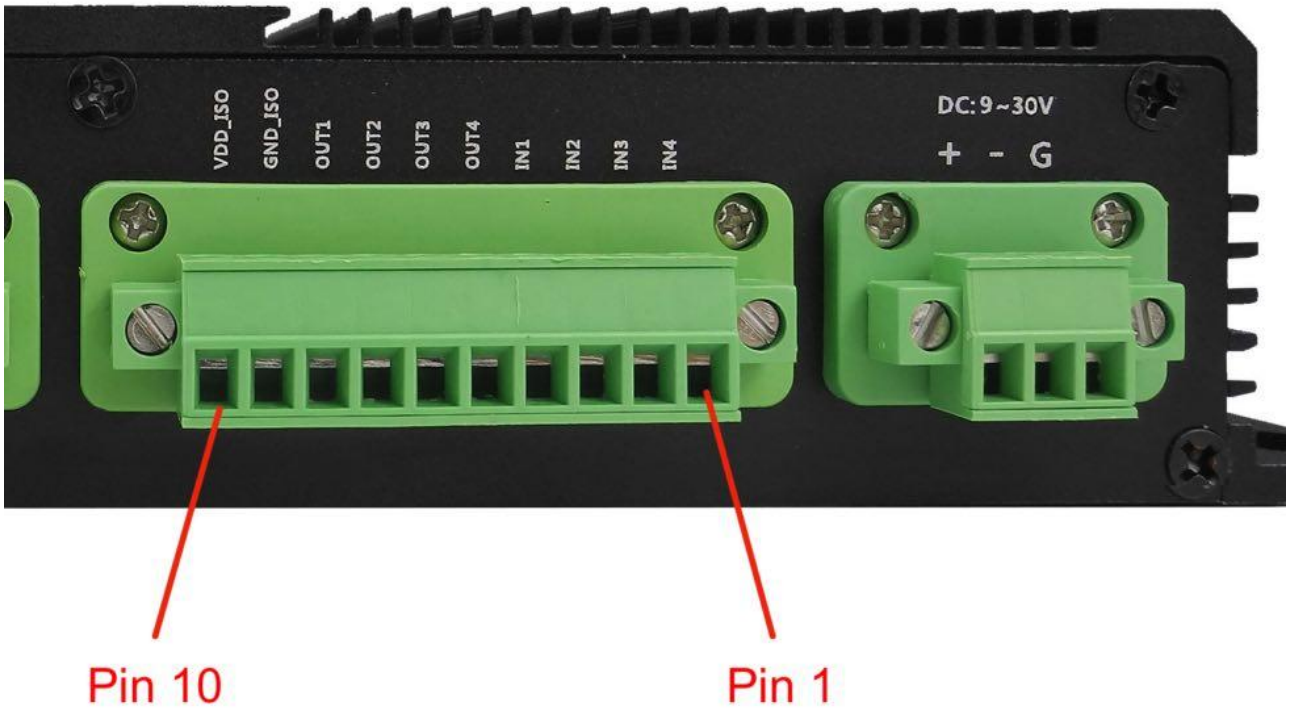

GPIO Connector

GPIO Connector Pin Definition:		
Pin Number	**Definition**	**Description**
Pin 10	VDD_ISO	Isolated Power +5V ~ +24V Input
Pin 9	GND_ISO	Isolated Ground
Pin 8	OUT1	Isolated Output 1
Pin 7	OUT2	Isolated Output 2
Pin 6	OUT3	Isolated Output 3
Pin 5	OUT4	Isolated Output 4
Pin 4	IN1	Isolated Input 1
Pin 3	IN2	Isolated Input 2
Pin 2	IN3	Isolated Input 3
Pin 1	IN4	Isolated Input 4

Table 400 GPIO Connector Pin-out

USB Connectors

There are 1 x USB 3.0 type-A Host, 1 x USB 2.0 type-A Host, 1 x USB type-C OTG onboard, as shown in the figure below.

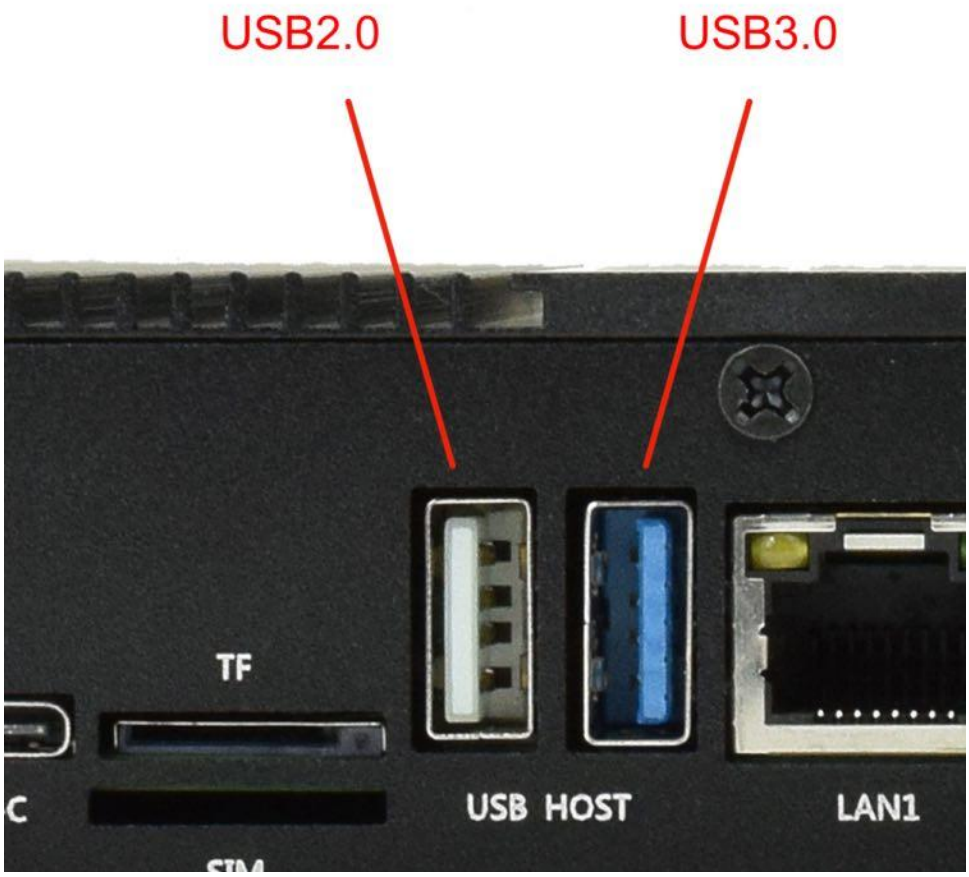

USB HOST Connectors

> **Attention**
>
> 1. These two USB host connectors can drive 500mA for each channel at most.
> 2. The USB3.0 comes directly from Raspberry Pi CM5.
> 3. When you connect this product to the HOST PC through the Type-C port, the USB2.0 type-A port will be **disabled**. As a result, the USB2.0 type-A port will not work until type-C is disconnected.

The product has one USB Type-C OTG connector that works as a slave by default. You can use it to establish a connection with the host PC and for downloading the system to the eMMC of CM5 module.

USB Type-C OTG Connector

Warning

1. Be careful not to touch surrounding electronic components accidentally while plugging in USB devices into the embedded Industrial PC version.

LAN

The 2 x Giga LAN provides Ethernet connectivity over standardized Ethernet cables as shown in the figure below. The integrated Ethernet interface supports up to 1 Gbps data throughput. These Giga LAN signals come from the CM5 module directly.

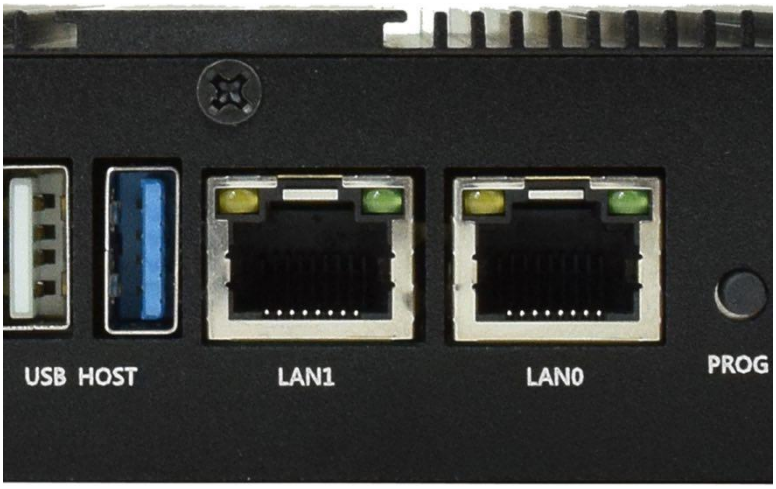

RJ45 LAN Connector

Note

Use CAT5 or better cables to achieve full data throughput over maximum distance defined by the 1000BASE-T standard (100m).

WiFi & BT Module

The default CS-CM5-BOX without the CM5 does not include a Wi-Fi/BT module.
If you include a CM5 that has the Wi-Fi/BT module, the product will have Wi-Fi/BT feature.
The product also has an SMA connector for an external WiFi/BT antenna:

WiFi+BT Antenna

Attention

The product does not come shipped with the Wi-Fi/BT module by default.

3G/4G/LTE Module

The CS-CM5-BOX industrial Pi PC is equipped with a **mini-PCIe connector** that can connect to a 3G/4G/LTE module. The customer will also need a SIM Card Holder and a 3G/4G/LTE antenna to ensure 3G/4G/LTE works on the CS-CM5-BOX. SIM card does **NOT** support hot plug. **Power off** before inserting or removing SIM card.

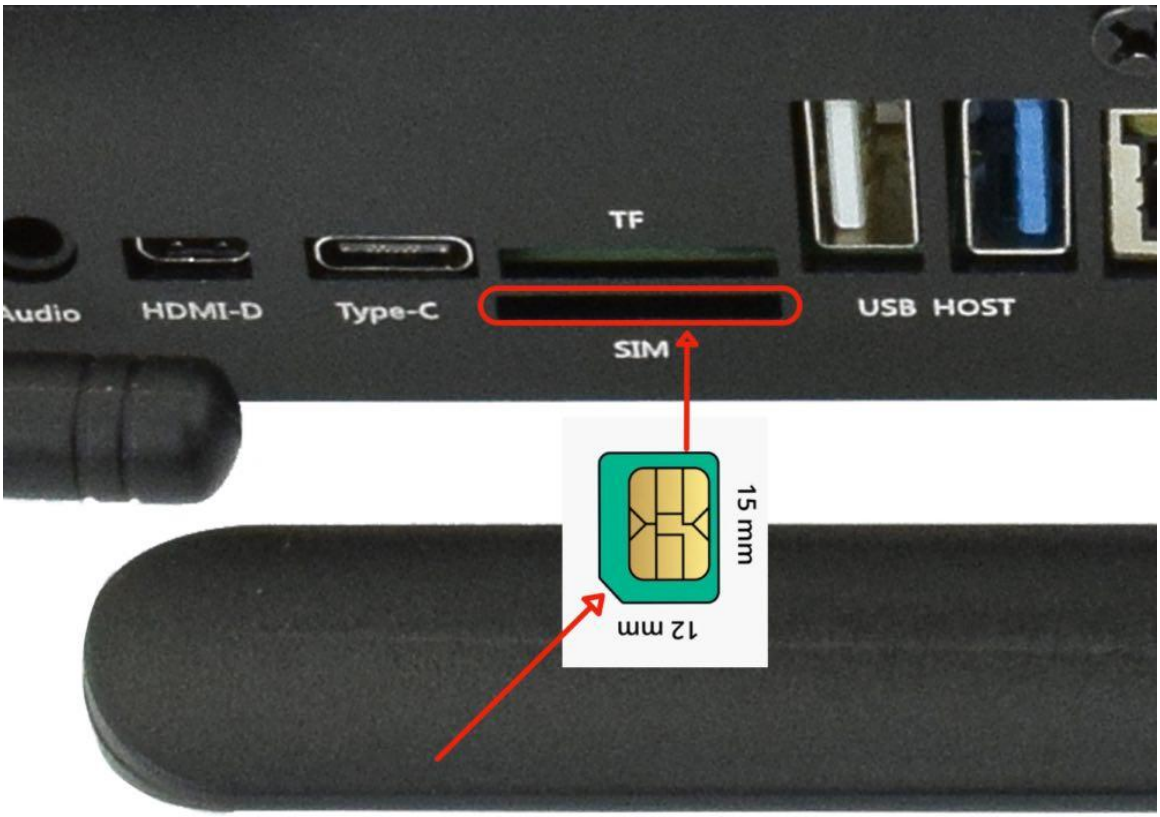

SIM Card Direction

3G/4G/LTE Module

Attention

The product does not come shipped with the 3G/4G/LTE module by default. If you need to use 3G/4G/LTE, you can contact us when placing an order, we can install the necessary hardware for you.

M.2 Module

The CS-CM5-BOX industrial Pi PC has a an **optional** M.2 slot, it supports NVME m.2 SSD or other m.2 modules such as an AI compute module. It's PCIe Gen 2 × 1 (5Gbps), M.2 M-Key 2230/2242 socket. The modules are **not included** in the product **by default**. If you need the M.2 slot or M.2 devices please contact us before placing an order.

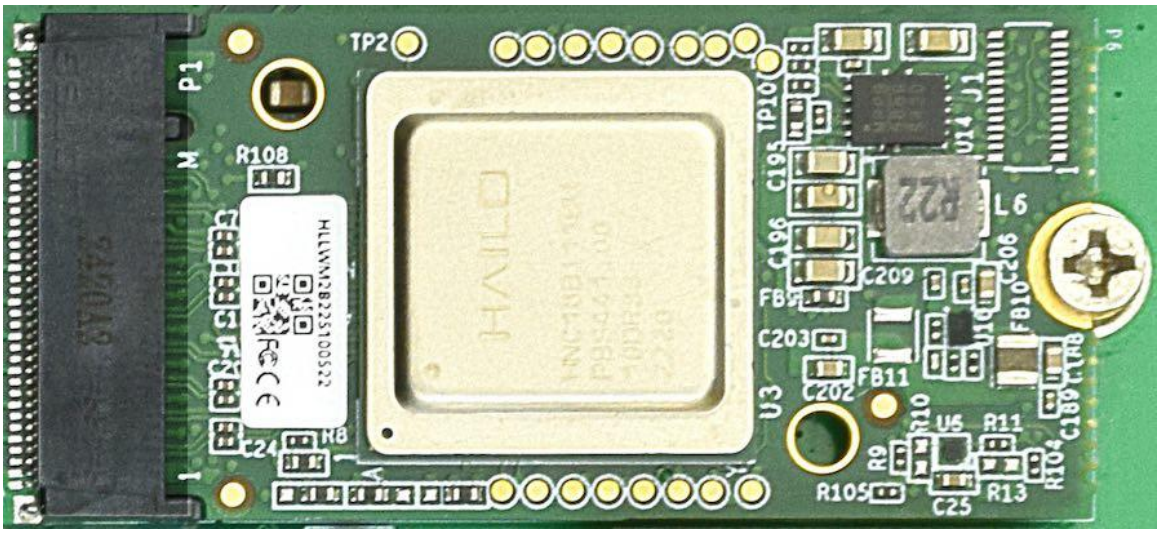

M.2 Connector

Camera Connector

The CS-CM5-BOX industrial Pi PC has a 22 Pin **Camera Connector**. The camera signals come from CAM1. The table below gives details about the definition of every pin.

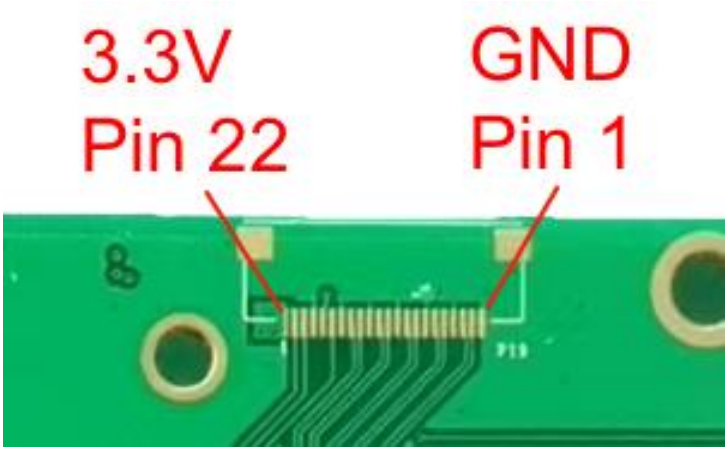

Camera Connector

Camera Connector Pin Definition:		
Pin Number	**Definition**	**Description**
Pin 1	GND	Power Ground
Pin 2	CAM1_DN0	CSI Negative Channel 0
Pin 3	CAM1_DP0	CSI Positive Channel 0
Pin 4	GND	Power Ground
Pin 5	CAM1_DN1	CSI Negative Channel 1
Pin 6	CAM1_DP1	CSI Positive Channel 1
Pin 7	GND	Power Ground
Pin 8	CAM1_CN	CSI Negative CLK
Pin 9	CAM1_CP	CSI Positive CLK
Pin 10	GND	Power Ground
Pin 11	CAM1_DN2	CSI Negative Channel 2
Pin 12	CAM1_DP2	CSI Positive Channel 2
Pin 13	GND	Power Ground
Pin 14	CAM1_DN3	CSI Negative Channel 3
Pin 15	CAM1_DP3	CSI Positive Channel 3
Pin 16	GND	Power Ground
Pin 17	CAM_GPIO0	CAM GPIO0, use for disable camera power and module
Pin 18	CAM_GPIO1	CAM GPIO1, use for disable camera power and module

Camera Connector Pin Definition:		
Pin 19	GND	Power Ground
Pin 20	SCL0	CPU I2C SCL0 signal
Pin 21	SDA0	CPU I2C SDA0 signal
Pin 22	+3.3V	System +3.3V Power Output, No more than 500mA Current output

Table 401 Camera Connector Pin-out

Attention

1. The camera connector is supported but not mounted by default. Please contact us when placing an order if you need to use camera on the CS-CM5-BOX.

TF Card Slot

The CS-CM5-BOX industrial Pi PC features 1 x **TF Card (micro SD) slot**. A slot can address up to 128GB of memory.

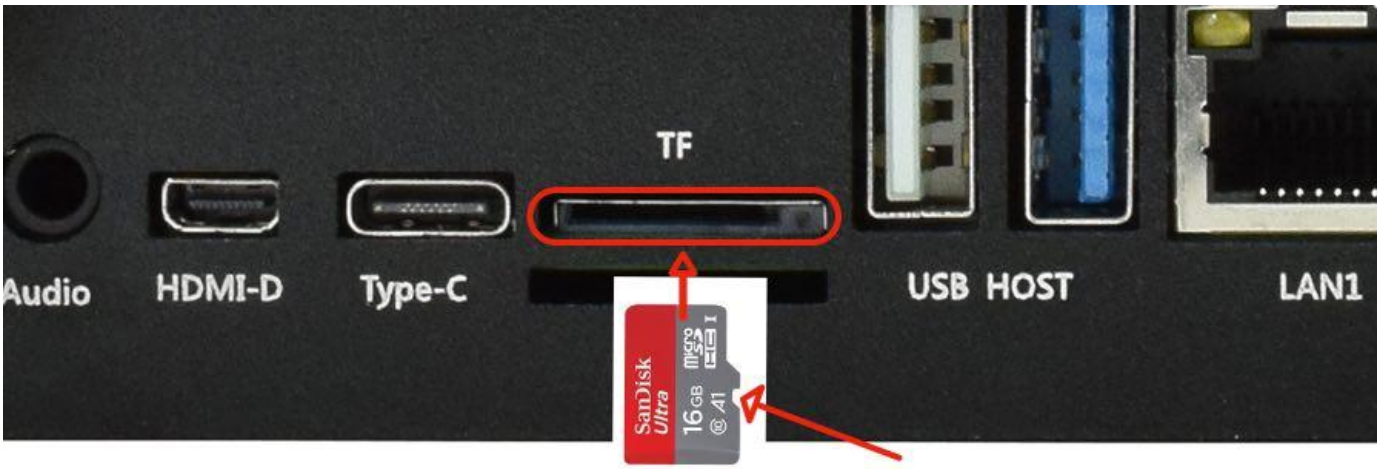

TF (micro SD) Card Slot

Attention

1. The TF card cannot be used for memory extension. It is only used for system boot-up for CM5 LITE model.
2. The product does not come shipped with the TF card by default.

Audio Connectors

The CS-CM5-BOX industrial Pi PC features some audio peripherals. It has 1 x **3.5mm audio output jack**.
Also, the CS-CM5-BOX industrial Pi PC has a miniature 2W internal speaker for audio reproduction, as well as a small buzzer for alarm/notification sounds.

Audio Connector

Attention

By plugging in the headphone cable, the internal speaker will be disabled automatically.

HDMI Connector

The CS-CM5-BOX industrial Pi PC supports 1 x HDMI-D (Micro HDMI) 2.0 out, can be driven up to 4K 60FPS.

Micro HDMI Connector

PROG Button

The CS-CM5-BOX industrial Pi PC has one button for entering usb download mode, as shown in the figure below.

When booting **with** the button being pressed, the Raspberry Pi will boot from the USB connector. You can use this feature to download the OS software to the internal eMMC.

When booting **without pressing** the button, the Raspberry Pi will boot from the internal eMMC.

There is no need to press the button during regular operation. However, if you need to reinstall the OS, please refer to the detailed information on how to reflash the OS from the Software Documentation.

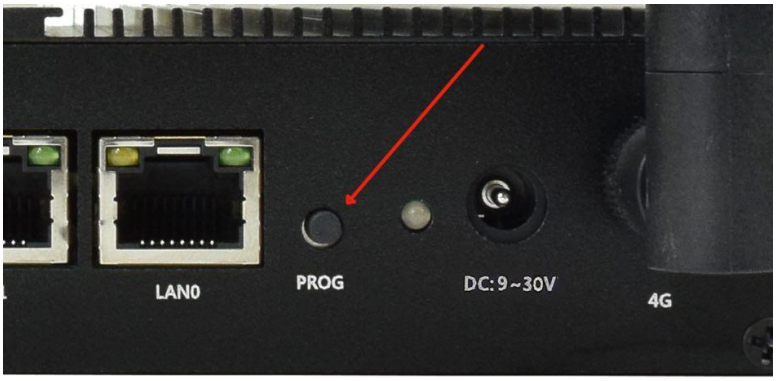

PROG Button

Mounting Procedure

You can mount CSRA5BOX with VESA mounting (guide): **75 x 75** mm, 4 x **M4** (6mm) screws.

You can also mount CSRA5BOX with rear mounting method (guide).

Mechanical Specifications

Please refer to the technical drawing in the figure below for details related to the specific product measurements.

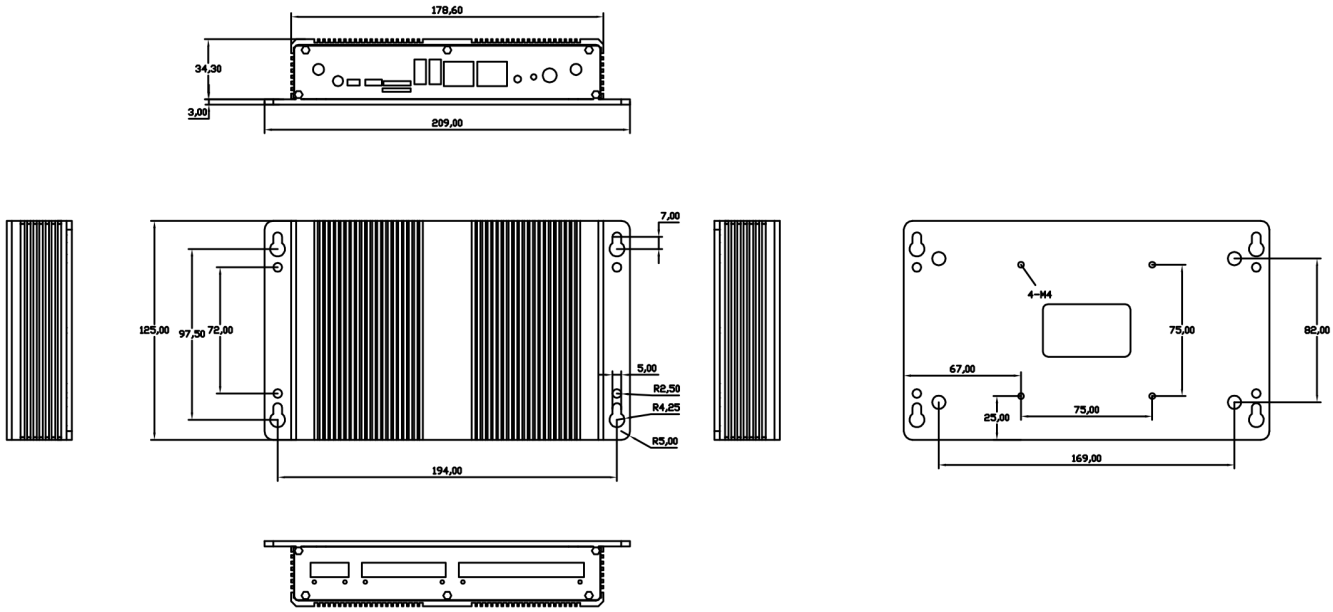

CSRA5BOX *Technical Drawing*

Disclaimer

This document is provided strictly for informational purposes. Its contents are subject to change without notice. Chipsee assumes no responsibility for any errors that may occur in this document. Furthermore, Chipsee reserves the right to alter the hardware, software, and/or specifications set forth herein at any time without prior notice and undertakes no obligation to update the information contained in this document.

While every effort has been made to ensure the accuracy of the information contained herein, this document is not guaranteed to be error-free. Further, it does not offer any warranties or conditions, whether expressed orally or implied in law, including implied warranties and conditions of merchantability or fitness for a particular purpose. We specifically disclaim any liability with respect to this document, and no contractual obligations are formed either directly or indirectly by this document.

Despite our best efforts to maintain the accuracy of the information in this document, we assume no responsibility for errors or omissions, nor for damages resulting from the use of the information herein. Please note that Chipsee products are not authorized for use as critical components in life support devices or systems.

Technical Support

If you encounter any difficulties or have questions related to this document, we encourage you to refer to our other documentation for potential solutions. If you cannot find the solution you're looking for, feel free to contact us. Please email Chipsee Technical Support at **support@chipsee.com**, providing all relevant information. We value your queries and suggestions and are committed to providing you with the assistance you require.