Chipsee

Industrial PC

EPC/PPC-A72-070-C

PN: CS10600R070

Content can change at anytime, check our website for latest information of this product.
www.chipsee.com

Contents

EPC/PPC-A72-070-C 3

1. Product Overview 7

2. Ordering Options 8

2.1. Operating System 8

2.2. Optional Features 9

3. Hardware Features 10

4. Power Input 12

5. Touch Screen 13

6. Connectivity 14

6.1. RS232+RS485 Connector 14

6.2. USB Connectors 16

6.3. LAN Connectors 17

6.4. WiFi & BT Module 18

6.5. 4G/LTE Module 19

6.6. GPIO Port 21

7. TF Card Slot 24

8. Audio Connectors 25

9. HDMI Connector 26

10. Power Button 27

11. Mounting Procedure 28

11.1. EPC-A72-070-C 28

11.2. PPC-A72-070-C 28

12. Mechanical Specifications 29

12.1. EPC-A72-070-C 29

12.2. PPC-A72-070-C 29

13. 3D Model 31

14. Disclaimer 32

15. Technical Support 32

EPC/PPC-A72-070-C

Front View

Rear View

LAN
VCC-ISO
GND-ISO
OUT1
OUT2
OUT3
OUT4
IN1
IN2
IN3
IN4
RS485_2-
RS485_2+
RS232_1_RXD
RS232_1_TXD
RS232_0_RXD
RS232_0_TXD
CPU_RS232_4_RXD
CPU_RS232_4_TXD
CPU_RS232_2_RXD
CPU_RS232_2_TXD
GND
+5V
G
(DC 12-36V) -
+
USB3.0 HOST

Side View 1

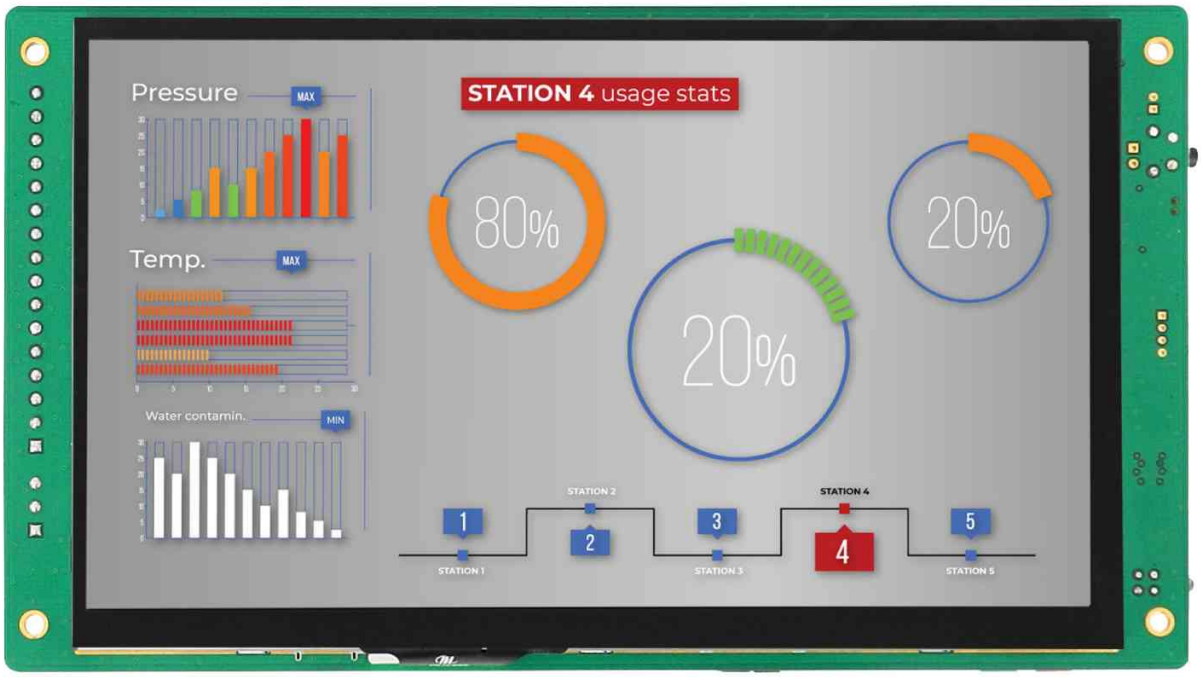
Pressure
MAX
Temp.
MAX
Water contamin.
MIN
STATION 4 usage stats
80%
20%
20%
STATION 1
STATION 2
STATION 3
STATION 4
STATION 5
1
2
3
4
5

Side View 2

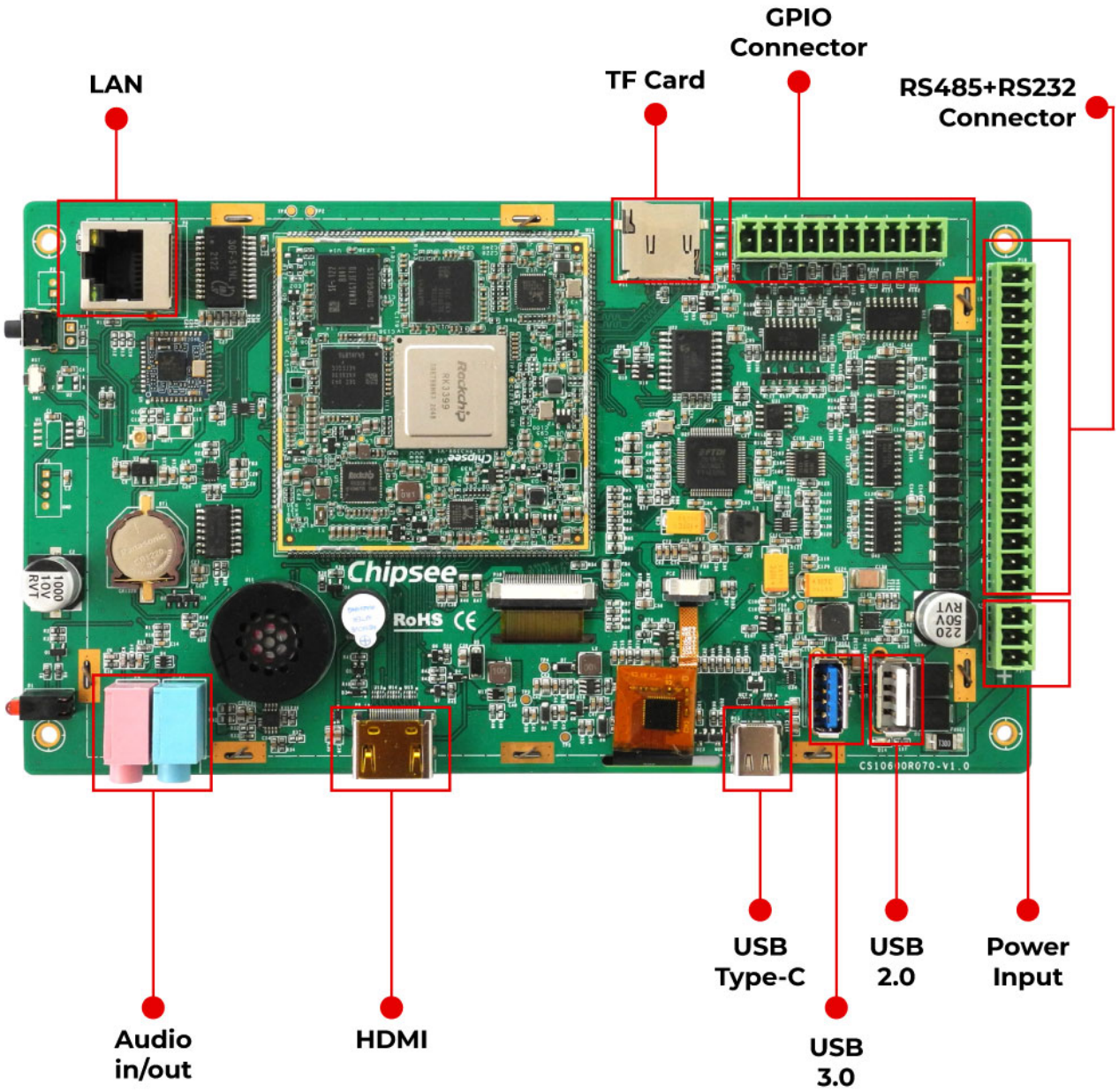
LAN
TF Card
GPIO Connector
RS485+RS232 Connector
Audio in/out
HDMI
USB Type-C
USB 3.0
USB 2.0
Power Input

Product Overview

The Cortex®-A72/53 series EPC/PPC-A72-070-C (PN: CS10600R070) is a high-quality industrial panel PC. This single board computer features a 7.0” five-point capacitive touch screen with a resolution of 1024 x 600 pixels and brightness of 500 cd/m^2.

Key Applications

- Human Machine Interface HMI
- Mobile Applications
- Video Processing
- Machine Learning
- Video Gaming
- Process Control
- Process Monitoring
- ATM...

It is available both as an embedded solution and as a device hosed in an aluminum casing with bezels, thus facilitating different installation options:

- Installation on an industrial cabinet
- Integration with the existing equipment

The EPC/PPC-A72-070-C Industrial Panel PC is based around the powerful CS-SOM-RK3399 System on Module (SoM), powered by the Rockchip RK3399 low-power processor which integrates a dual-core Cortex®-A72 and a quad-core Cortex®-A53 with a separate NEON coprocessor.

The RK3399 supports multi-format video decoders and has a high-performance dual-channel external memory interface (DDR3/DDR3L/LPDDR3/LPDDR4) capable of sustaining demanding memory bandwidths. It also provides a complete set of peripheral interfaces.

Ordering Options

Chipsee products can be customized during the ordering process. The product will be shipped with the pre-installed factory defaults if no extra requirements are specified. The table in the Hardware Features section provides information about the default options bundled with the product.

> **Note**
>
> You can order EPC/PPC-A72-070-C from the official Chipsee Store or from your nearest distributor.

Operating System

This product comes with a pre-installed OS of your choice. Please see the list below for the supported OSes, which can be also obtained from the Software Documentation section, along with the detailed installation instructions.

- Buildroot Linux Qt5.14*
- Android 7.1
- Android 11
- Debian 10

---

* (Formerly Chipsee Linux) Based on buildroot that has been integrated with:

1. Chipsee Hardware Test Application
2. An initialization script for GPIO/Buzzer/Audio
3. Multiple libraries, such as the `libQt5Sql` to develop Qt application with SQL
4. Various packages, such as the `ntfs-3g` to use NTFS file system

> **Warning**
>
> The Software Documentation section provides a detailed instruction on how to install different OSes on your own. However, bear in mind that Chipsee can't take the responsibility of inadequate installation procedure. If you "brick" your device, please contact Chipsee Technical Support at **support@chipsee.com** for further assistance

Optional Features

The EPC/PPC-A72-070-C Industrial Panel PC does not include 4G/LTE module by default. The module is optional and can be selected at the Chipsee store during the ordering process.

> **Warning**
>
> Installation, repair, and maintenance tasks should be performed by trained personnel only.
> Chipsee does not bear any responsibility for damage caused by inadequate handling of the product.

Hardware Features

The EPC/PPC-A72-070-C Industrial Panel PC offers a broad range of performance and connectivity options for scalable integration, providing expandability to meet future needs. Some of the key features are listed in the table below.

EPC/PPC-A72-070-C	
CPU	Rokchip RK3399, Dual-core Cortex-A72 (1.8GHz), Quad-core Cortex-A53 (1.4GHz)
RAM	4GB DDR3
eMMC	16GB
Storage	TF Card, Supports up to 32GB SDHC
Display	7.0" LCD, 1024 x 600, High Brightness: 500 cd/m^2
Touch	5-point capacitive touch screen
USB	1 x USB 2.0 HOST, 1 x USB 3.0 HOST, 1 x USB Type-C
LAN	1 x RJ45, GbE
Audio	3.5mm Audio In/Out Connector, 2W Internal Speaker
Buzzer	Yes
RTC	Yes
RS232	4 x RS2321
RS485	2 x RS485 (1 debug port)1
GPIO	8 Channels
WiFi/BT	Integrated WiFi/BT Module
HDMI	1 x HDMI
4G/LTE	Not supported
Power Input	From 12V to 36V
Current at 15V	800mA Max
Power Consumption	8W Typical
Working Temperature	From 0°C to +60°C
OS	Android 7.1, Android 11, Buildroot Linux Qt5.14, Debian 10
Dimensions	EPC-A72-070-C (PN: CS10600R070E): 190 x 107 x 27.7mm
	PPC-A72-070-C (PN: CS10600R070P): 205.5 x 135.5 x 27.5mm
Weight	EPC-A72-070-C (PN: CS10600R070E): 345g
	PPC-A72-070-C (PN: CS10600R070P): 580g

EPC/PPC-A72-070-C	
Mounting	EPC-A72-070-C (PN: CS10600R070E): Embedded
	PPC-A72-070-C (PN: CS10600R070P): Panel

Table 128 Key Features

1(1,2) This product has 7 x UART channels in total. The default configuration is 5 x RS232 and 2 x RS485. UART can be swapped between RS232 and RS485 modes easily, so if you need different RS232/RS485 configuration, please get in touch with the Chipsee Technical Support at **support@chipsee.com**

Power Input

The EPC/PPC-A72-070-C Industrial Panel PC can be powered by a wide range of input voltages: From 12V to 36V DC. The power input connector is a **3-pin, 3.81mm terminal**. The polarity and the pinout is clearly marked on the housing of the product as shown on the figure below.

Figure 404: *Power Input*

Note that the "**+**" sign represents the positive power input, and it is printed both at the casing and as a silk-screen on a PCB of the embedded version. The "**-**" terminal is shorted to the ground.

Power Input Definition		
Pin Number	**Definition**	**Description**
Pin 1	Positive Input	DC Power **Positive Terminal**
Pin 2	Negative Input	DC Power **Negative Terminal**
Pin 3	Ground	**Power System Ground**

Table 129 Power Connector

> **Note**
>
> The system ground "**G**" is connected to power negative "**-**" on board.

Touch Screen

The EPC/PPC-A72-070-C Industrial Panel PC uses a 5-point capacitive touch screen.

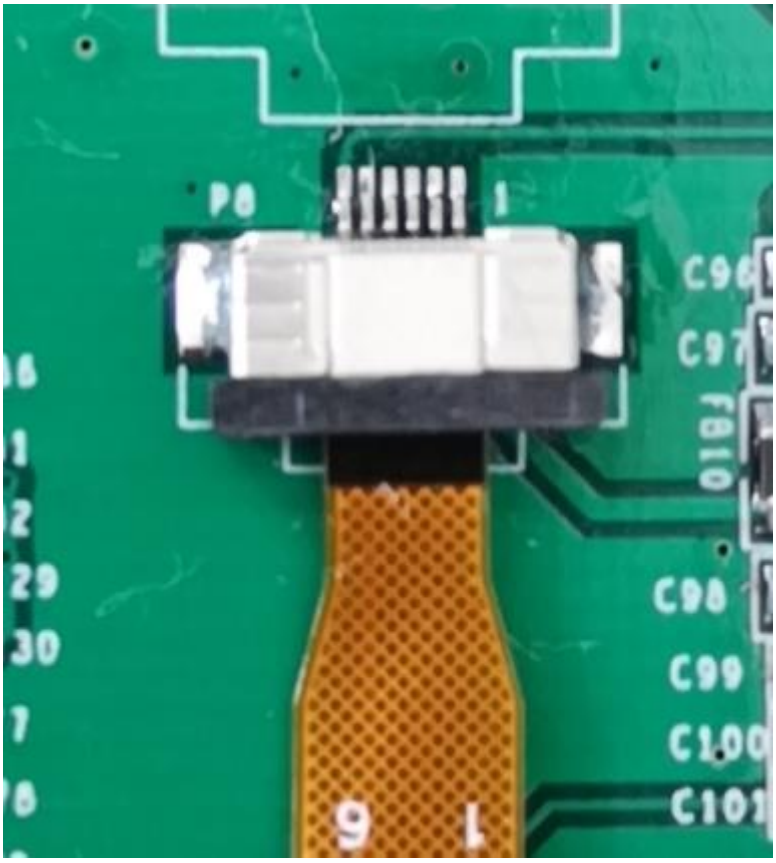

Figure 405: *Capacitive Touch Screen Connector*

Attention

A capacitive touch screen is susceptible to power noise and Electromagnetic Radiation (EMR). It may cause LCD ripples or even capacitive touch malfunction. If using a capacitive multi-touch test application, you might notice the touch points float erratically across the display. There are several solutions to this problem:

1. Use a high-quality Power Adapter Unit (PSU) with low EMR. You can also provide power from a battery.
2. Make sure that the EPC/PPC-A72-070-C Power Input connector (pin 3) is properly connected to the Power System Ground to provide sufficient EMI shielding and eliminate the problem entirely.
3. Bad GND problem can also be confirmed by touching pin 3 of the Power Input connector with one hand while operating the capacitive touch screen with the other hand. In this case, the operator's body acts as the Power System Ground.

Connectivity

There are many connectivity options available on the EPC/PPC-A72-070-C industrial PC. It has 1 x USB 2.0 HOST, 1 x USB 3.0 HOST, 1 x USB Type-C, 1 x network connector (RJ45) supporting up to 1 Gbps, and 7 x UART terminals (RS232/485).

RS232+RS485 Connector

The serial communication interfaces (RS485 and RS232) are routed to a **16-pin 3.81mm terminal**, as illustrated in the figure below. Serial communication on both RS485 and RS232 interfaces can reach up to 115200 kbps.

Figure 406: *Relation between serial pins on embedded vs. enclosed version*

The table below offers more detailed description of every pin and its definition:

RS232 / RS485 / CAN Pin Definition:		
Pin Number	**Definition**	**Description**
Pin 1	NULL	NULL
Pin 2	NULL	NULL
Pin 3	RS485_3-	USB UART3, RS485 -(B) signal
Pin 4	RS485_3+	USB UART3, RS485 +(A) signal
Pin 5	RS485_2-	USB UART2, RS485 -(B) signal
Pin 6	RS485_2+	USB UART2, RS485 +(A) signal
Pin 7	RS232_1_RXD	USB UART1, RS232 RXD signal
Pin 8	RS232_1_TXD	USB UART1, RS232 TXD signal
Pin 9	RS232_0_RXD	USB UART0, RS232 RXD signal
Pin 10	RS232_0_TXD	USB UART0, RS232 TXD signal
Pin 11	CPU_RS232_4_RXD	CPU UART4, CPU RS232 RXD signal
Pin 12	CPU_RS232_4_TXD	CPU UART4, CPU RS232 TXD signal
Pin 13	CPU_RS232_2_RXD	CPU UART2, CPU RS232 RXD signal
Pin 14	CPU_RS232_2_TXD	CPU UART2, CPU RS232 TXD signal
Pin 15	GND	System Ground
Pin 16	+5V	System 5V output, up to 1A

Table 130 Connectivity Section

USB Connectors

There are 3 x **USB HOST connectors** onboard which includes 1 x USB 2.0 HOST, 1 x USB 3.0 HOST, and 1 x USB Type-C, as shown in the figures below.

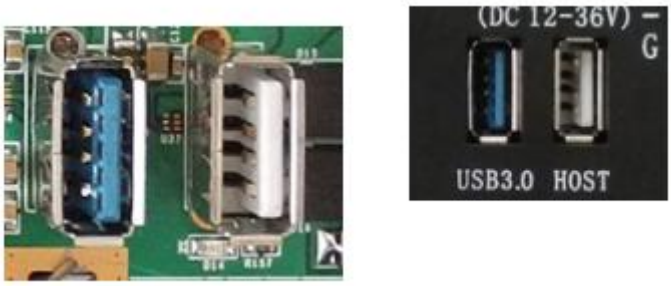

Figure 407: *USB 2.0 HOST and USB 3.0 HOST Connectors (embedded/enclosed PC version)*

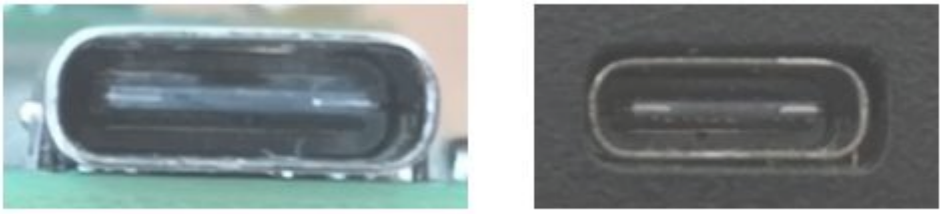

Figure 408: *USB Type-C Connector (embedded/enclosed PC version)*

Warning

Be careful not to touch surrounding electronic components accidentally while plugging in USB devices into the embedded IPC version.

LAN Connectors

LAN (RJ45) connector provides Ethernet connectivity over standardized Ethernet cables as shown the figure below. The integrated Ethernet interface supports up to 1 Gbps data throughput.

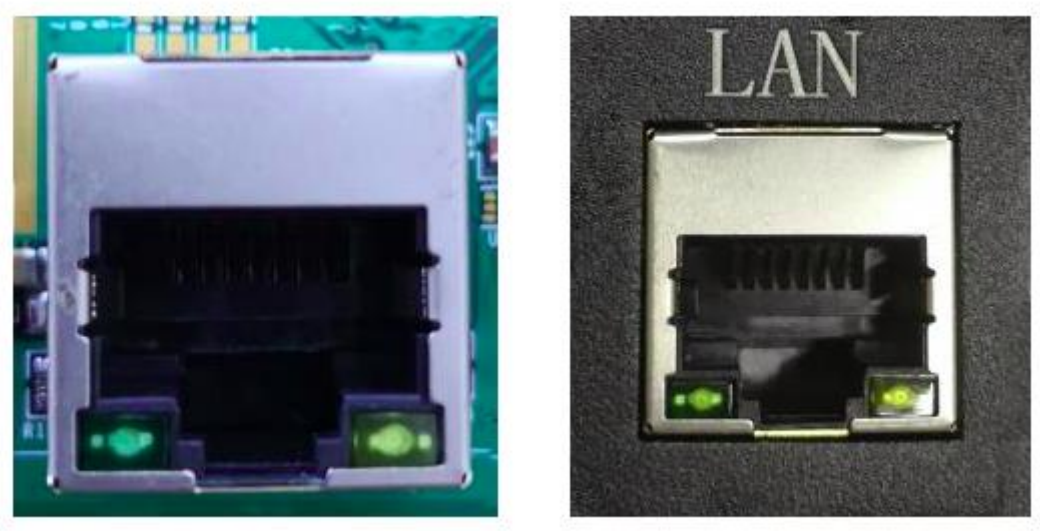

Figure 409: *RJ45 LAN Connector*

Note

Use CAT5 or better cables to achieve full data throughput over maximum distance defined by the 1000BASE-T standard (100m).

WiFi & BT Module

The EPC/PPC-A72-070-C Industrial Panel PC is equipped with the popular **Realtek RTL8723 WiFi/BT module** that supports BT/BLE 4.0 (with backward compatibility), as well as 802.11bgn 2.4 GHz Wireless LAN (WLAN).

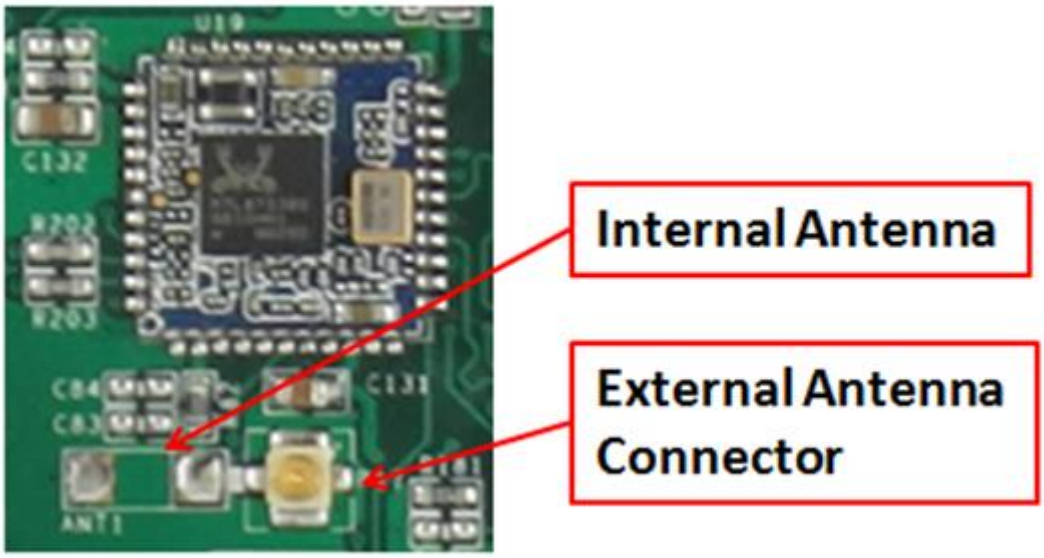

Figure 410: *RTL8273 WiFi/BT Module*

The product includes an SMA connector for an external WiFi/BT antenna, as illustrated in the figure below.

Figure 411: *WiFi+BT Antenna*

4G/LTE Module

The EPC/PPC-A72-070-C Industrial Panel PC is equipped with a **mini-PCIe connector** that can connect to a 4G/LTE module. The customer will also need a SIM Card Holder and a 4G/LTE Antenna Connector to ensure 4G/LTE works on the EPC/PPC-A72-070-C. SIM card does NOT support hot plug. Power off before inserting or removing SIM card.

Figure 412: *mini-PCIe Connector & 4G Module*

Figure 413: *SIM Card Holder & 4G Antenna*

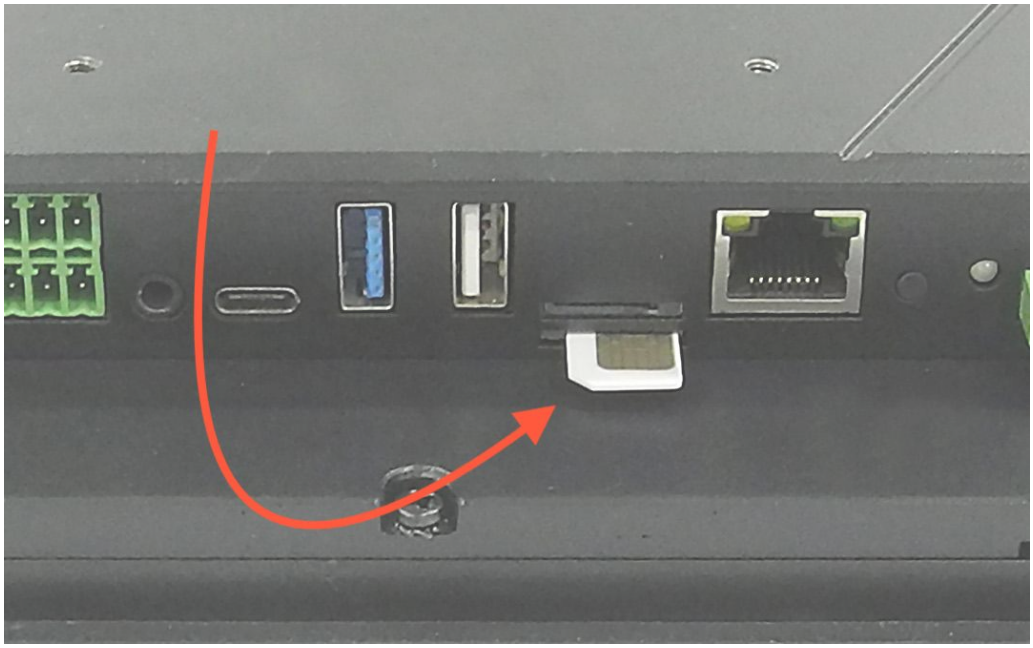

SIM Card Direction

Attention

The product does not come shipped with the 4G/LTE module by default.

GPIO Port

The EPC/PPC-A72-070-C Industrial Panel PC has a 10 Pin 3.81mm **GPIO Connector**, as shown on the figure below, that is labeled as P18 on the PCB. The table below gives details about the definition of every Pin.

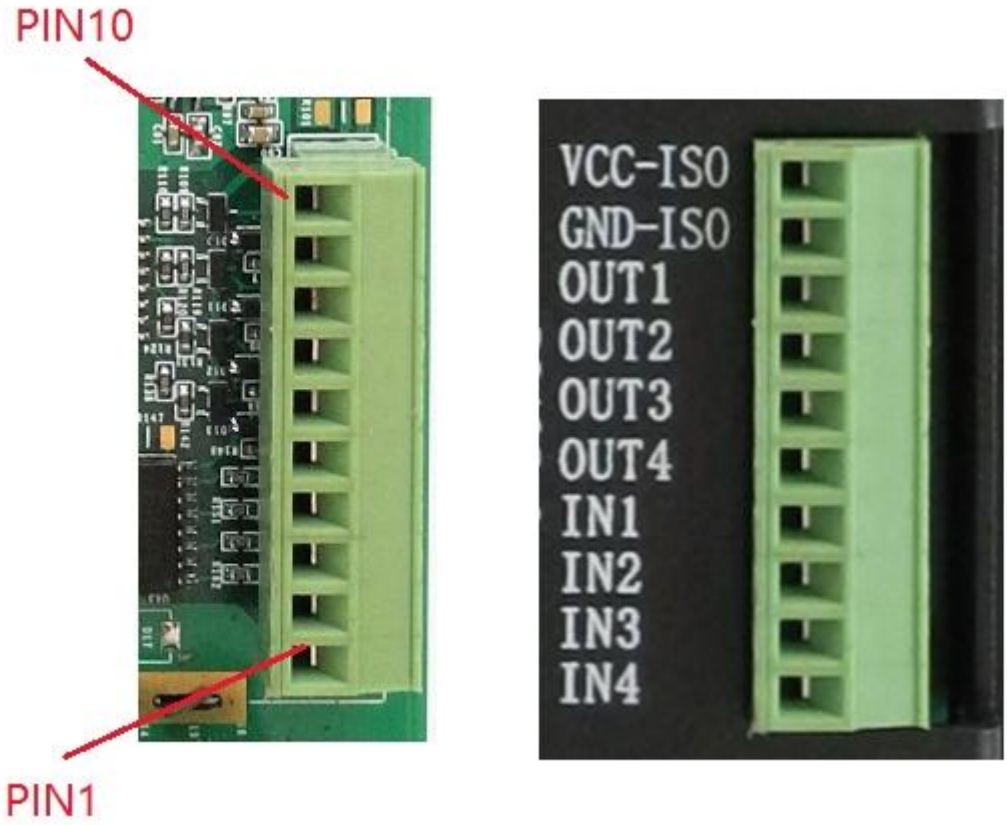

Figure 414: *GPIO Connector*

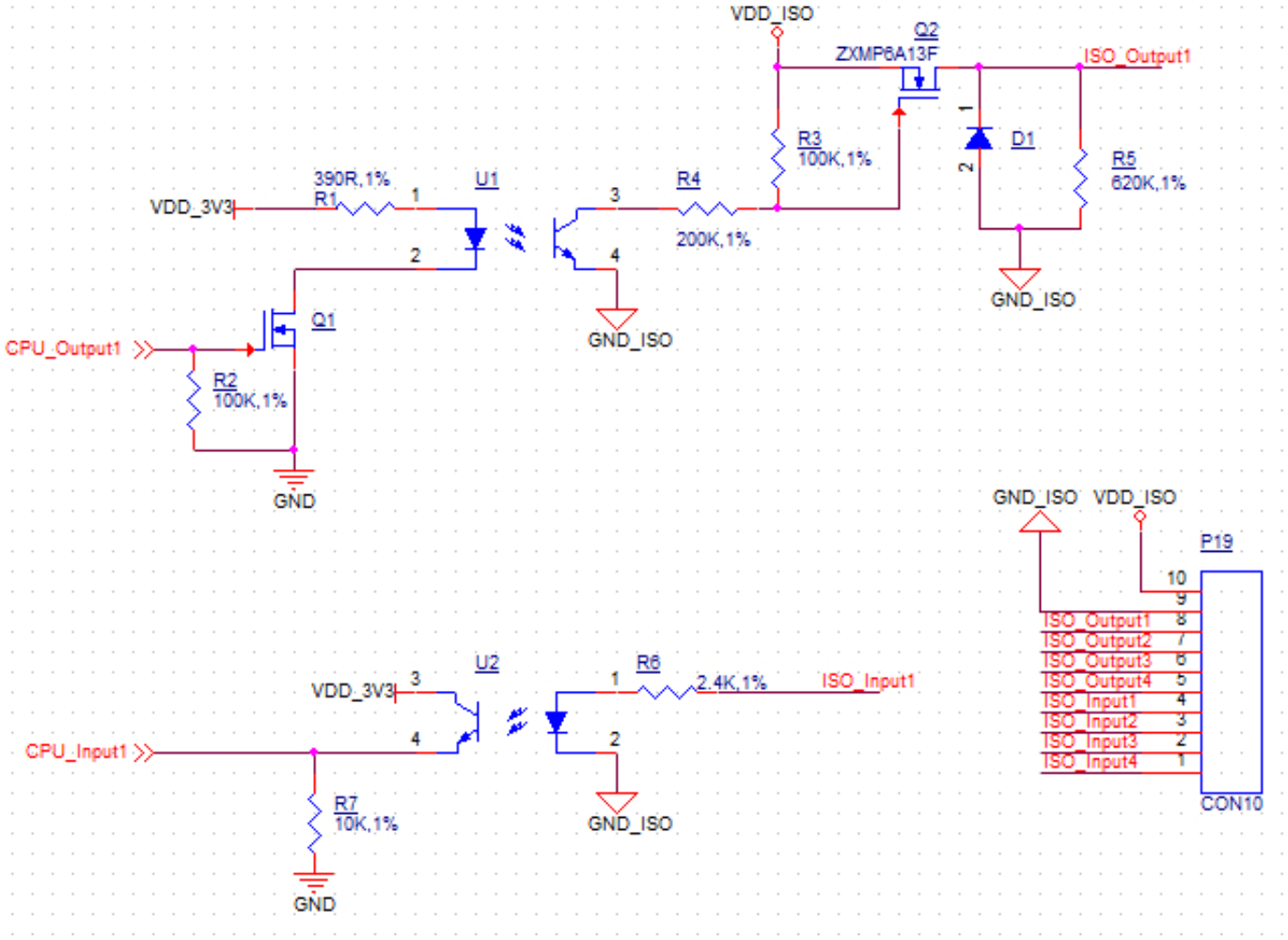

Isolated GPIO reduced schematic

GPIO Connector Pin Definition:		
Pin Number	**Definition**	**Description**
Pin 10	VCC_ISO	Isolated Power +5V Output
Pin 9	GND_ISO	Isolated Ground
Pin 8	OUT1	Isolated Output 1
Pin 7	OUT2	Isolated Output 2
Pin 6	OUT3	Isolated Output 3
Pin 5	OUT4	Isolated Output 4
Pin 4	IN1	Isolated Input 1
Pin 3	IN2	Isolated Input 2
Pin 2	IN3	Isolated Input 3
Pin 1	IN4	Isolated Input 4

Table 131 GPIO Connector Pin-out

Attention

- The GPIO Connector is optional.You can **Contact us** if you need it.
- The GPIO has been Opt-Isolated and it uses the 5V Logic by default. You can use an external isolated power input but the power input range should be from 5V to 24V DC.
- The 4 output channels can drive at most 500mA current on each channel.

TF Card Slot

The EPC/PPC-A72-070-C Industrial Panel PC features 1 x **TF Card (micro SD) slot**. It can address up to 128GB of memory.

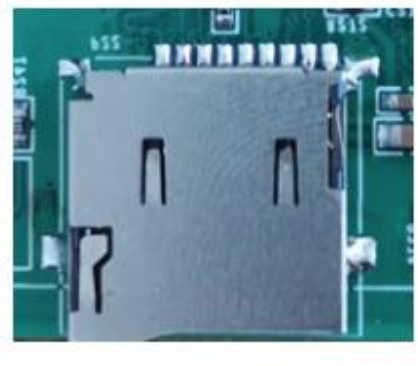

Figure 415: *TF (micro SD) Card Slot*

Note

The product does not come shipped with the TF Card by default.

Audio Connectors

The EPC/PPC-A72-070-C Industrial Panel PC features some audio peripherals, as well. It has 1 x **3.5mm audio input jack** and 1 x **3.5mm audio output jack**.

The pink connector is the audio input jack (line-in) and the blue connector is the audio output jack (line-out, typically around -10 dBV) as shown on the figure below.

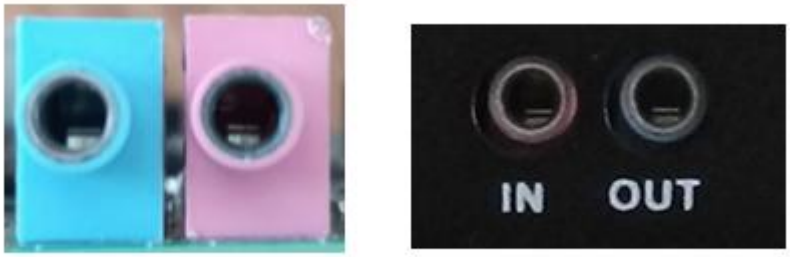

Figure 416: *Audio I/O (embedded/enclosed PC version)*

In addition, EPC/PPC-A72-070-C features a miniature 2W embedded speaker for audio reproduction, as well as a small buzzer for alarm/notification sounds.

Figure 417: *2W Micro Speaker and Buzzer*

HDMI Connector

The EPC/PPC-A72-070-C Industrial Panel PC is equipped with 1 x **HDMI connector**. The HDMI connector allows connecting an additional (external) monitor. HDMI output resolution can be configured by the software.

Figure 418: *HDMI Connector*

Power Button

The EPC/PPC-A72-070-C Industrial Panel PC has a power button, as shown on the figure below. You can use the button to power ON or OFF the industrial PC.

Figure 419: *Power Button*

Mounting Procedure

The EPC/PPC-A72-070-C Industrial Panel PC can be mounted with 4 x M4 screws, enabling simplified installation onto any standard mounting fixture. Other mounting options might also be supported according to the table in the Hardware Features section.

EPC-A72-070-C

You can mount EPC-A72-070-C with the Embedded mounting method, as shown on the figure below.

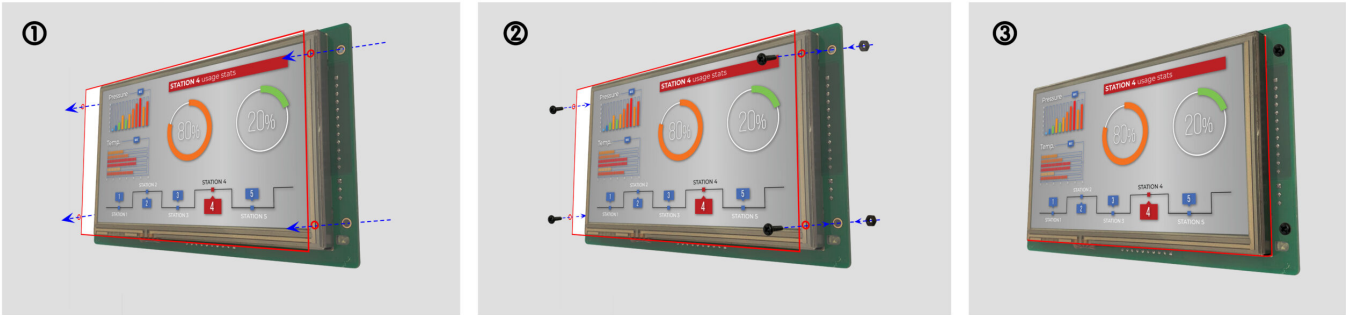

Figure 420: *Embedded mounting*

PPC-A72-070-C

You can mount PPC-A72-070-C with the Panel mounting methods, as shown on the figure below.

Figure 421: *Panel mounting*

Attention

Please make sure the display is not exposed to high pressure when mounting into an enclosure.

You can find detailed information about mounting in the Mount IPC Guide.

Mechanical Specifications

EPC-A72-070-C

The outer mechanical dimensions of EPC-A72-070-C are 190 x 107 x 27.7mm (W x L x H). Please refer to the technical drawing in the figure below for details related to the specific product measurements.

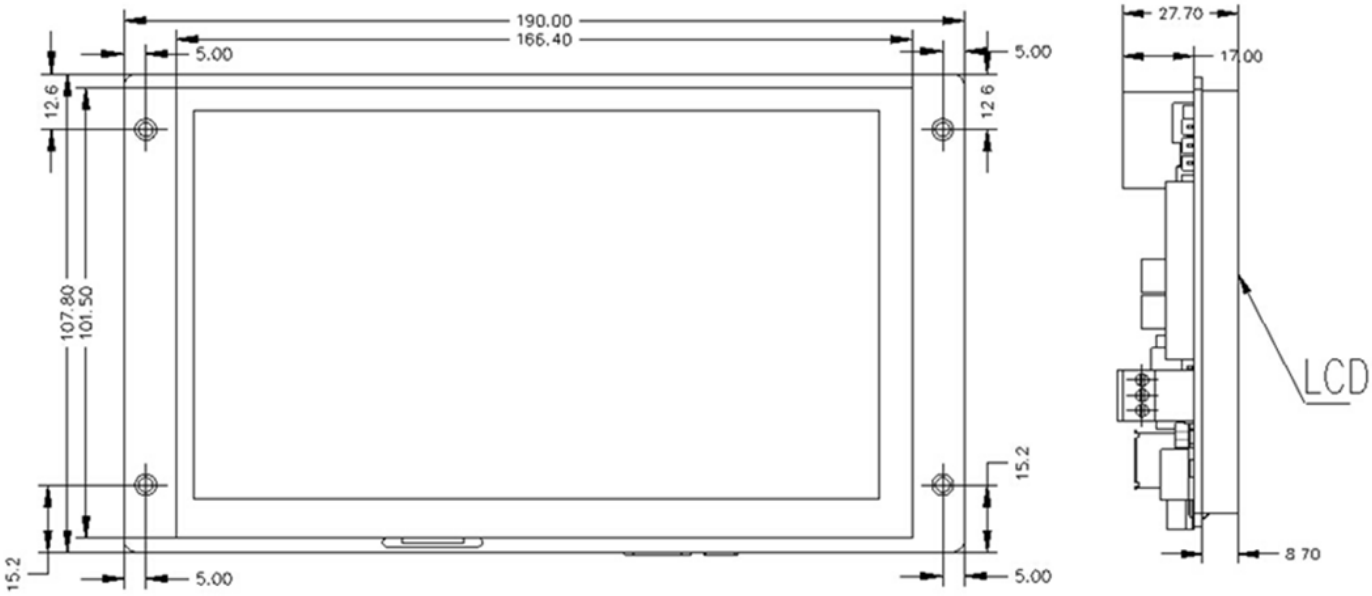

Figure 422: EPC-A72-070-C *Technical Drawing*

PPC-A72-070-C

For PPC-A72-070-C, the outer mechanical dimensions are 205.5 x 135.5 x 27.5mm (W x L x H). Please refer to the technical drawing in the figure below for details related to the specific product measurements.

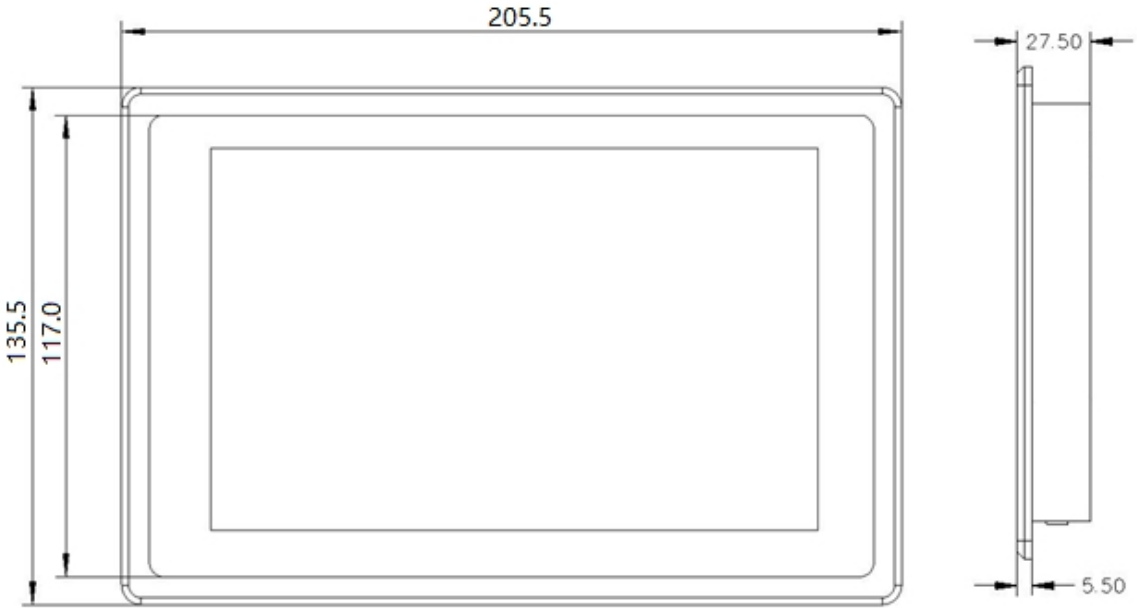

Figure 423: PPC-A72-070-C *Technical Drawing*

Caution

- When you use product EPC-A72-070-C, you should not touch the circuit board on the back of the product if the product is powered ON.
- Also, when the product is powered OFF, please take anti-static measures before touching the circuit board.

3D Model

EPC/PPC-A72-070-C 3D model can be viewed in the online doc in a web browser, **if you are reading from the PDF** version, please visit the online doc EPC/PPC-A72-070-C, select hardware documentation, drag the navigation bar to the 3D Model section.

Disclaimer

This document is provided strictly for informational purposes. Its contents are subject to change without notice. Chipsee assumes no responsibility for any errors that may occur in this document. Furthermore, Chipsee reserves the right to alter the hardware, software, and/or specifications set forth herein at any time without prior notice and undertakes no obligation to update the information contained in this document.

While every effort has been made to ensure the accuracy of the information contained herein, this document is not guaranteed to be error-free. Further, it does not offer any warranties or conditions, whether expressed orally or implied in law, including implied warranties and conditions of merchantability or fitness for a particular purpose. We specifically disclaim any liability with respect to this document, and no contractual obligations are formed either directly or indirectly by this document.

Despite our best efforts to maintain the accuracy of the information in this document, we assume no responsibility for errors or omissions, nor for damages resulting from the use of the information herein. Please note that Chipsee products are not authorized for use as critical components in life support devices or systems.

Technical Support

If you encounter any difficulties or have questions related to this document, we encourage you to refer to our other documentation for potential solutions. If you cannot find the solution you're looking for, feel free to contact us. Please email Chipsee Technical Support at **support@chipsee.com**, providing all relevant information. We value your queries and suggestions and are committed to providing you with the assistance you require.