Chipsee

Industrial PC

PPC-A72-101

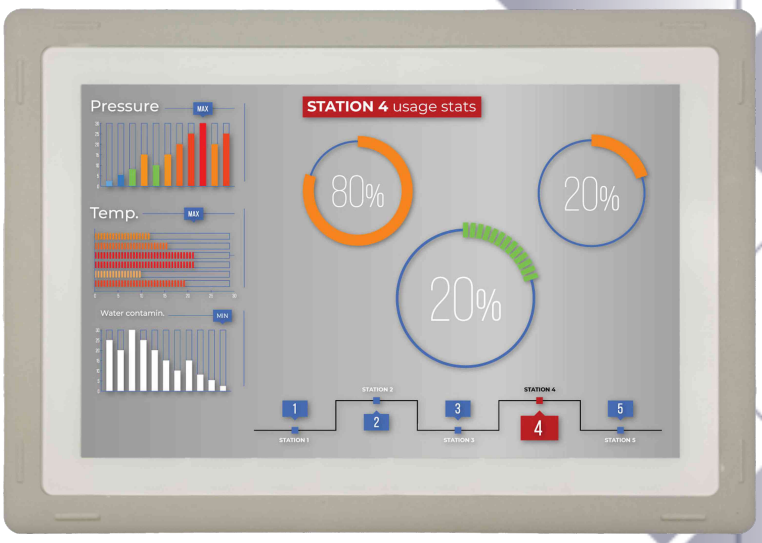

PN: CS12800R101P

Content can change at anytime, check our website for latest information of this product.
www.chipsee.com

Contents

PPC-A72-101 3

1. Product Overview 7

2. Ordering Options 8

2.1. Operating System 8

2.2. Optional Features 9

3. Hardware Features 10

4. Power Input 12

5. Touch Screen 13

6. Connectivity 14

6.1. RS232+RS485+CAN+GPIO Connector 14

6.2. USB Connectors 17

6.3. LAN Connectors 18

6.4. WiFi & BT Module 19

6.5. 4G/LTE Module 20

7. TF Card Slot 22

8. Audio Connectors 23

9. Power Button 24

10. Mounting Procedure 25

10.1. PPC-A72-101 25

11. Mechanical Specifications 26

11.1. PPC-A72-101 26

12. 3D Model 27

13. Disclaimer 28

14. Technical Support 28

PPC-A72-101

Front View

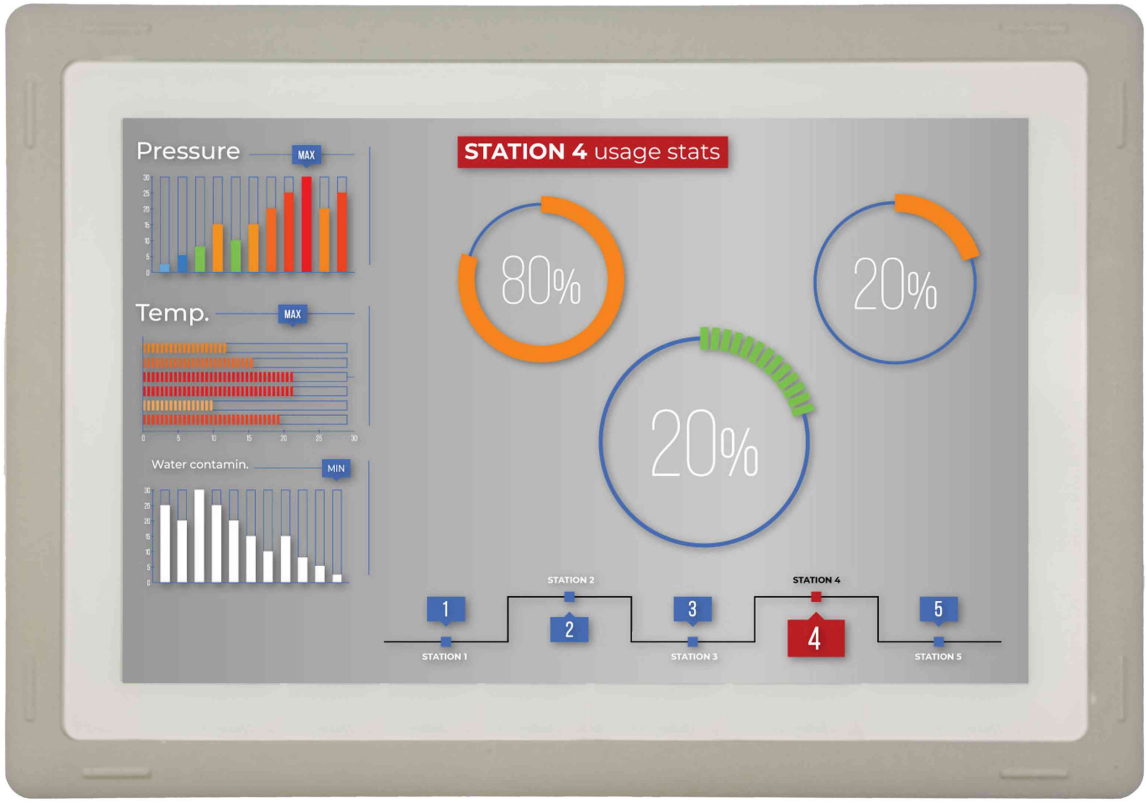

Rear View

Chipsee
Type:CS12800R101P
Rev:C111
OS: Linux
SN: 2022071350000801
https://chipsee.com
Origin:Made in China

Side View 1

Side View 2

1
23
Audio In/Out
USB2.0
TF Card
LED
(DC12-36V)
+ - G
TF Card
SIM Card
2
24
Type-C
USB3.0
SIM Card
LAN
Power Button
RS232+CAN+RS485+GPIO

Product Overview

The Cortex®-A72/53 series PPC-A72-101 (PN: CS12800R101P) is a high-quality industrial panel PC. This single board computer features a 10.1” ten-point capacitive touch screen with a resolution of 1280 x 800 pixels and brightness of 400 cd/m^2.

Key Applications

- Human Machine Interface HMI
- Mobile Applications
- Video Processing
- Machine Learning
- Video Gaming
- Process Control
- Process Monitoring
- ATM...

It is available both as an embedded solution and as a device hosed in an aluminum casing with bezels, thus facilitating different installation options:

- Installation on an industrial cabinet
- Integration with the existing equipment

The PPC-A72-101 Industrial Panel PC is based around the powerful CS-SOM-RK3399 System on Module (SoM), powered by the Rockchip RK3399 low-power processor which integrates a dual-core Cortex®-A72 and a quad-core Cortex®-A53 with a separate NEON coprocessor.

The RK3399 supports multi-format video decoders and has a high-performance dual-channel external memory interface (DDR3/DDR3L/LPDDR3/LPDDR4) capable of sustaining demanding memory bandwidths. It also provides a complete set of peripheral interfaces.

Ordering Options

Chipsee products can be customized during the ordering process. The product will be shipped with the pre-installed factory defaults if no extra requirements are specified. The table in the Hardware Features section provides information about the default options bundled with the product.

> **Note**
>
> You can order PPC-A72-101 from the official Chipsee Store or from your nearest distributor.

Operating System

This product comes with a pre-installed OS of your choice. Please see the list below for the supported OSes, which can be also obtained from the Software Documentation section, along with the detailed installation instructions.

- Buildroot Linux Qt5.14*
- Android 7.1
- Android 11
- Debian 10

---

* (Formerly Chipsee Linux) Based on buildroot that has been integrated with:

1. Chipsee Hardware Test Application
2. An initialization script for GPIO/Buzzer/Audio
3. Multiple libraries, such as the `libQt5Sql` to develop Qt application with SQL
4. Various packages, such as the `ntfs-3g` to use NTFS file system

> **Warning**
>
> The Software Documentation section provides a detailed instruction on how to install different OSes on your own. However, bear in mind that Chipsee can't take the responsibility of inadequate installation procedure. If you "brick" your device, please contact Chipsee Technical Support at **support@chipsee.com** for further assistance

Optional Features

The PPC-A72-101 Industrial Panel PC does not include 4G/LTE module by default. The module is optional and can be selected at the Chipsee store during the ordering process.

> **Warning**
>
> Installation, repair, and maintenance tasks should be performed by trained personnel only.
> Chipsee does not bear any responsibility for damage caused by inadequate handling of the product.

Hardware Features

The PPC-A72-101 Industrial Panel PC offers a broad range of performance and connectivity options for scalable integration, providing expandability to meet future needs. Some of the key features are listed in the table below.

PPC-A72-101	
CPU	Rockchip RK3399, Dual-core Cortex-A72 (1.8GHz), Quad-core Cortex-A53 (1.4GHz)
RAM	4GB DDR3
eMMC	16GB
Storage	TF Card, Supports up to 128GB SDHC
Display	10.1" LCD, 1280 x 800, High Brightness: 400 cd/m^2
Touch	10-point capacitive touch screen
USB	1 x USB 2.0 HOST, 1 x USB 3.0 HOST, 1 x USB Type-C
LAN	1 x RJ45, GbE
Audio	3.5mm Audio In/Out Connector, 2W Internal Speaker
Buzzer	Yes
RTC	Yes
RS232	3 x RS232 (Optional 5 x RS232 at most, 1 debug port)1
RS485	2 x RS4851
GPIO	8 Channels
WiFi/BT	Integrated WiFi/BT Module
4G/LTE	Supported, Optional
Power Input	From 12V to 36V
Current	700mA Max(15V)
Power Consumption	12W Typical
Working Temperature	From 0°C to +60°C
OS	Android 7.1, Android 11, Buildroot Linux Qt5.14, Debian 10
Dimensions	PPC-A72-101 (PN: CS12800R101P): 275.5 x 193.5 x 46.0mm
Weight	PPC-A72-101 (PN: CS12800R101P): 1600g
Mounting	PPC-A72-101 (PN: CS12800R101P): Panel, VESA

Table 132 Key Features

1(1,2) This product has 5 x UART channels in total. The default configuration is 3 x RS232 and 2 x RS485, including 1 debug port. UART can be swapped between RS232 and RS485 modes easily, so if you need a different RS232/RS485 configuration, please get in touch with the Chipsee Technical Support at **support@chipsee.com**

Power Input

The PPC-A72-101 Industrial Panel PC can be powered by a wide range of input voltages: From 12V to 36V DC. The power input connector is a **3-pin, 3.81mm terminal**. The polarity and the pinout is clearly marked on the housing of the product as shown on the figure below.

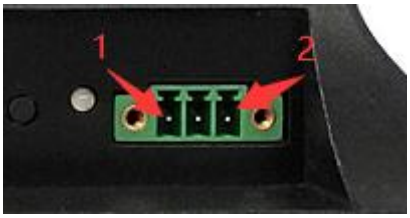

Figure 424: *Power Input*

Note that the "**+**" sign represents the positive power input, and it is printed both at the casing and as a silk-screen on a PCB of the embedded version. The "**-**" terminal is shorted to the ground.

Power Input Definition		
Pin Number	**Definition**	**Description**
Pin 1	Positive Input	DC Power **Positive Terminal**
Pin 2	Negative Input	DC Power **Negative Terminal**
Pin 3	Ground	**Power System Ground**

Table 133 Power Connector

Note

The system ground "**G**" is connected to power negative "**-**" on board.

Touch Screen

The PPC-A72-101 Industrial Panel PC uses a 10-point capacitive touch screen.

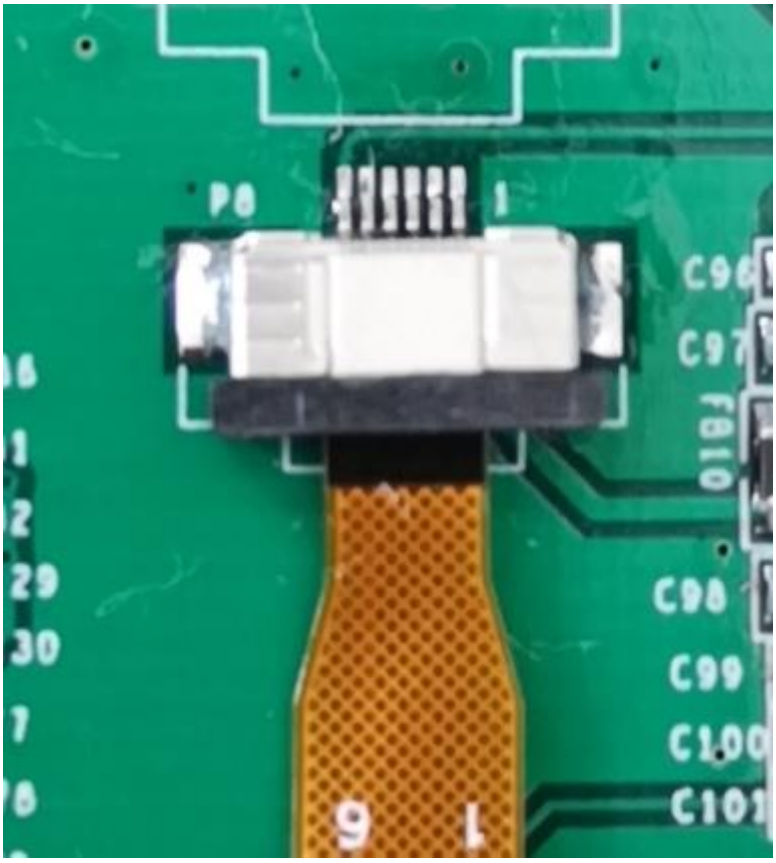

Figure 425: *Capacitive Touch Screen Connector*

Attention

A capacitive touch screen is susceptible to power noise and Electromagnetic Radiation (EMR). It may cause LCD ripples or even capacitive touch malfunction. If using a capacitive multi-touch test application, you might notice the touch points float erratically across the display. There are several solutions to this problem:

1. Use a high-quality Power Adapter Unit (PSU) with low EMR. You can also provide power from a battery.
2. Make sure that the PPC-A72-101 Power Input connector (pin 3) is properly connected to the Power System Ground to provide sufficient EMI shielding and eliminate the problem entirely.
3. Bad GND problem can also be confirmed by touching pin 3 of the Power Input connector with one hand while operating the capacitive touch screen with the other hand. In this case, the operator's body acts as the Power System Ground.

Connectivity

There are many connectivity options available on the PPC-A72-101 industrial PC. It has 1 x USB 2.0 HOST, 1 x USB 3.0 HOST, 1 x USB Type-C, 1 x network connector (RJ45) supporting up to 1 Gbps, 8xGPIO and 5 x UART terminals (RS232/485).

RS232+RS485+CAN+GPIO Connector

The serial communication interfaces (RS485, RS232, and CAN) are routed to a **12-pin 3.81mm terminal**, as illustrated on the figure below. Serial communication on both RS485 and RS232 interfaces can reach up to 115200 kbps.

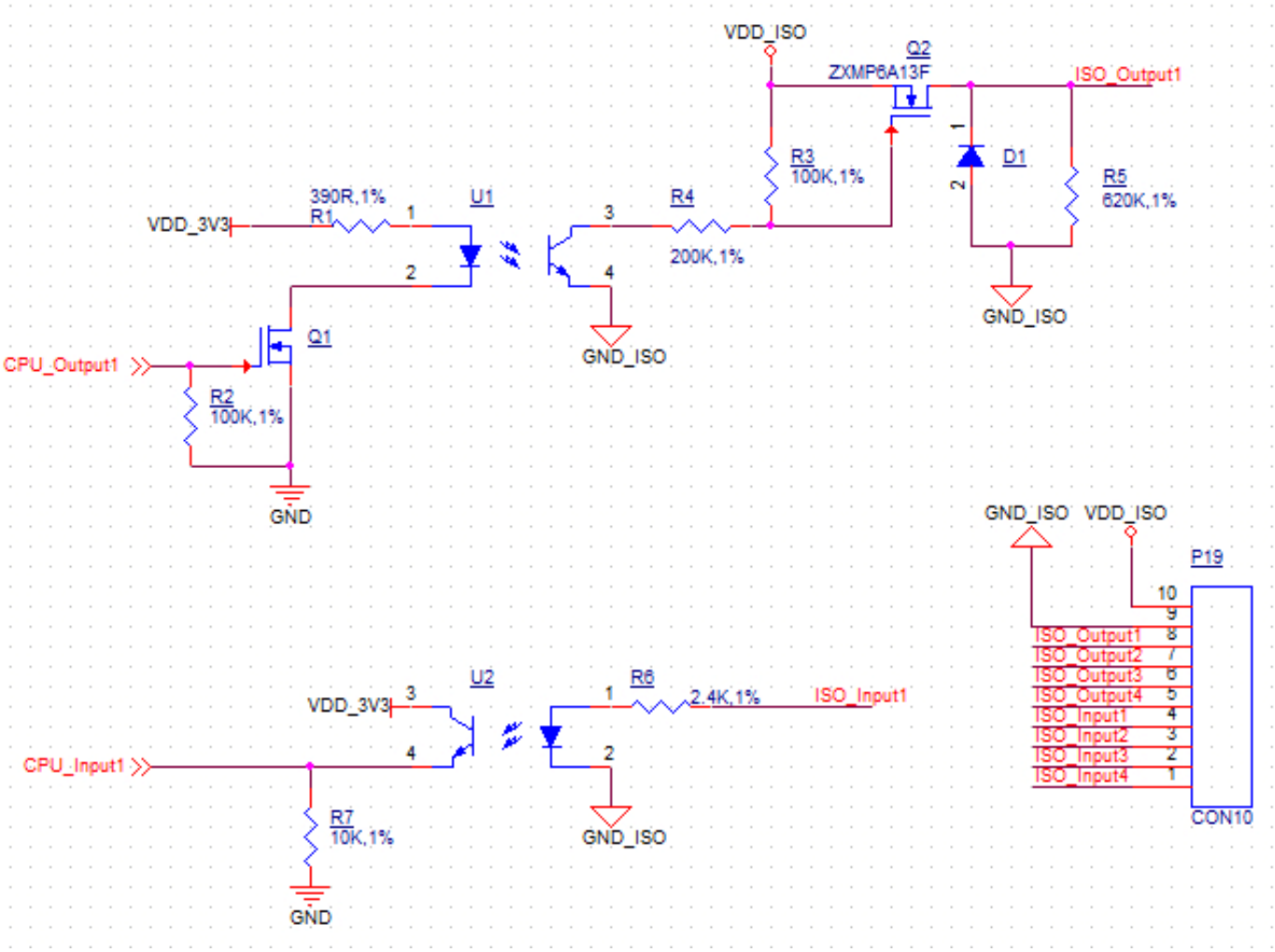

Isolated GPIO reduced schematic

2	4	6	8	10	12	14	16	18	20	22	24
CPU_RS232_2_RXD	CPU_RS232_2_TXD	IN4	IN3	IN2	IN1	OUT4	OUT3	OUT2	OUT1	GND_ISO	VDD_ISO
1	3	5	7	9	11	13	15	17	19	21	23
CAN1_H	CAN1_L	RS485_4-	RS485_4+	RS485_3-	RS485_3+	RS232_2_RXD	RS232_2_TXD	RS232_1_RXD	RS232_1_TXD	GND	VCC5V

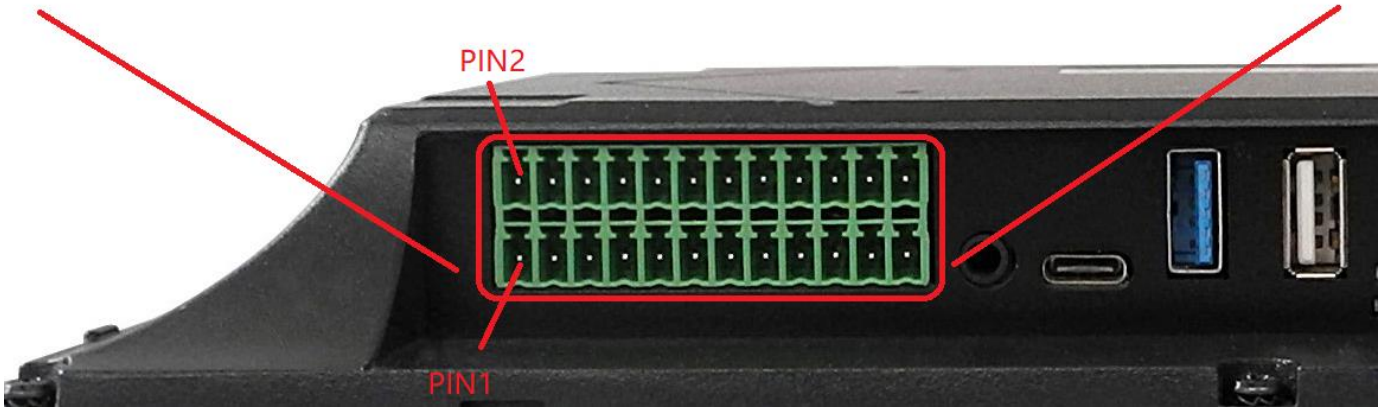

The table below offers more detailed description of every pin and its definition:

RS232 / RS485 / CAN / GPIO Pin Definition:		
Pin Number	**Definition**	**Description**
Pin 1	CAN1_H	CAN H signal
Pin 2	CPU_RS232_2_RXD	CPU UART2, CPU RS232 RXD signal
Pin 3	CAN1_L	CAN L signal
Pin 4	CPU_RS232_2_TXD	CPU UART2, CPU RS232 TXD signal
Pin 5	RS485_4-	USB UART4, RS485 -(B) signal
Pin 6	IN4	Isolated Input 4
Pin 7	RS485_4+	USB UART4, RS485 +(A) signal
Pin 8	IN3	Isolated Input 3
Pin 9	RS485_3-	USB UART3, RS485 -(B) signal
Pin 10	IN2	Isolated Input 2
Pin 11	RS485_3+	USB UART3, RS485 +(A) signal
Pin 12	IN1	Isolated Input 1
Pin 13	RS232_2_RXD	USB UART2, RS232 RXD signal
Pin 14	OUT4	Isolated Output 4
Pin 15	RS232_2_TXD	USB UART2, RS232 TXD signal
Pin 16	OUT3	Isolated Output 3
Pin 17	RS232_1_RXD	USB UART1, RS232 RXD signal
Pin 18	OUT2	Isolated Output 2
Pin 19	RS232_1_TXD	USB UART1, RS232 TXD signal

RS232 / RS485 / CAN / GPIO Pin Definition:		
Pin 20	OUT1	Isolated Output 1
Pin 21	GND	System Ground
Pin 22	GND_ISO	Isolated Ground
Pin 23	VCC5V	System 5V output, up to 1A
Pin 24	VDD_ISO	Isolated Power Input,support 5V~24V

Table 134 Connectivity Section

Attention

- The 120Ω match resistor for the RS485 and CAN bus is NOT mounted by default.
- This products support change 2 x RS485 to 2 x RS232 and support up to 5 x RS232 (include one debug port).
- The GPIO Connector is optional. You can **Contact us** if you need it.
- The GPIO has been Opt-Isolated and it uses the 24V Logic by default. You can use an external isolated power input but the power input range should be from 5V to 24V DC.
- The 4 output channels can drive at most 500mA current on each channel.

USB Connectors

There are 2 x **USB HOST connectors** onboard which includes 1 x USB 2.0 HOST, 1 x USB 3.0 HOST, 1 x USB Type-C , as shown in the figures below.

Figure 426: *USB 2.0 HOST Connectors (embedded/enclosed PC version)*

Figure 427: *USB 3.0 HOST Connectors (embedded/enclosed PC version)*

Figure 428: *USB Type-C Connector (embedded/enclosed PC version)*

Warning

Be careful not to touch surrounding electronic components accidentally while plugging in USB devices into the embedded IPC version.

LAN Connectors

LAN (RJ45) connector provides Ethernet connectivity over standardized Ethernet cables as shown the figure below. The integrated Ethernet interface supports up to 1 Gbps data throughput.

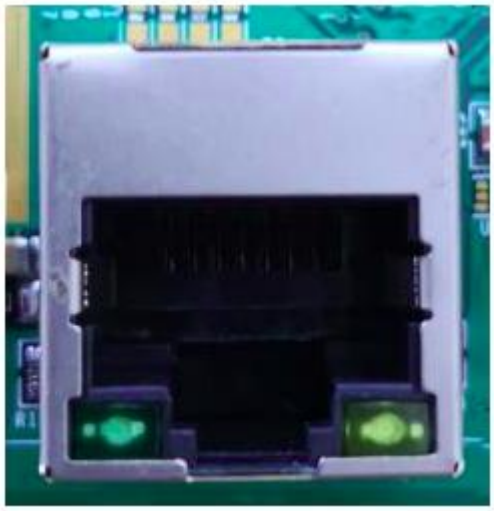

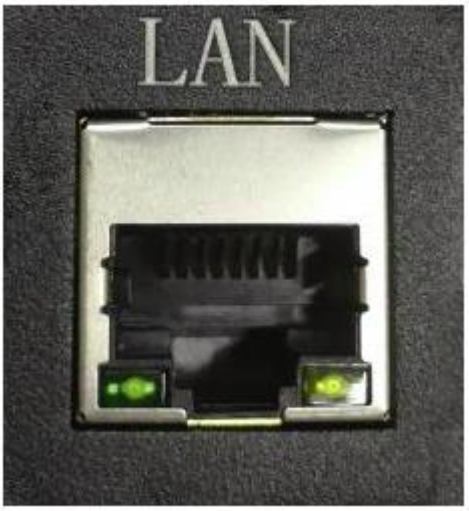

Figure 429: *RJ45 LAN Connector*

Note

Use CAT5 or better cables to achieve full data throughput over maximum distance defined by the 1000BASE-T standard (100m).

WiFi & BT Module

The PPC-A72-101 Industrial Panel PC is equipped with the popular **Realtek RTL8723 WiFi/BT module** that supports BT/BLE 4.0 (with backward compatibility), as well as 802.11bgn 2.4 GHz Wireless LAN (WLAN).

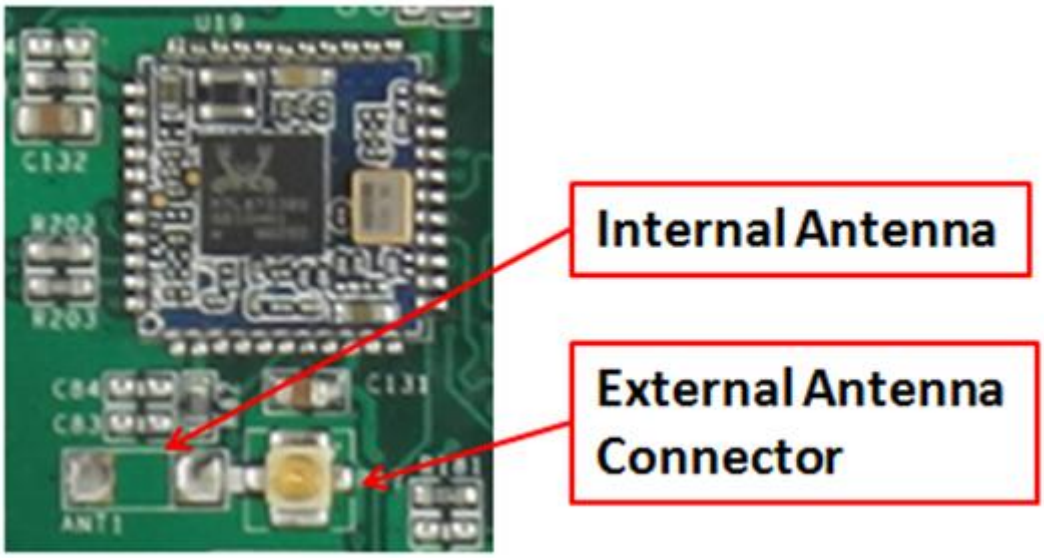

Figure 430: *RTL8273 WiFi/BT Module*

The product includes an SMA connector for an external WiFi/BT antenna, as illustrated in the figure below.

Figure 431: *WiFi+BT Antenna*

4G/LTE Module

The PPC-A72-101 Industrial Panel PC is equipped with a **mini-PCIe connector** that can connect to a 4G/LTE module. The customer will also need a SIM Card Holder and a 4G/LTE Antenna Connector to ensure 4G/LTE works on the PPC-A72-101. SIM card does NOT support hot plug. Power off before inserting or removing SIM card.

Figure 432: *mini-PCIe Connector & 4G Module*

Figure 433: *SIM Card Holder & 4G Antenna*

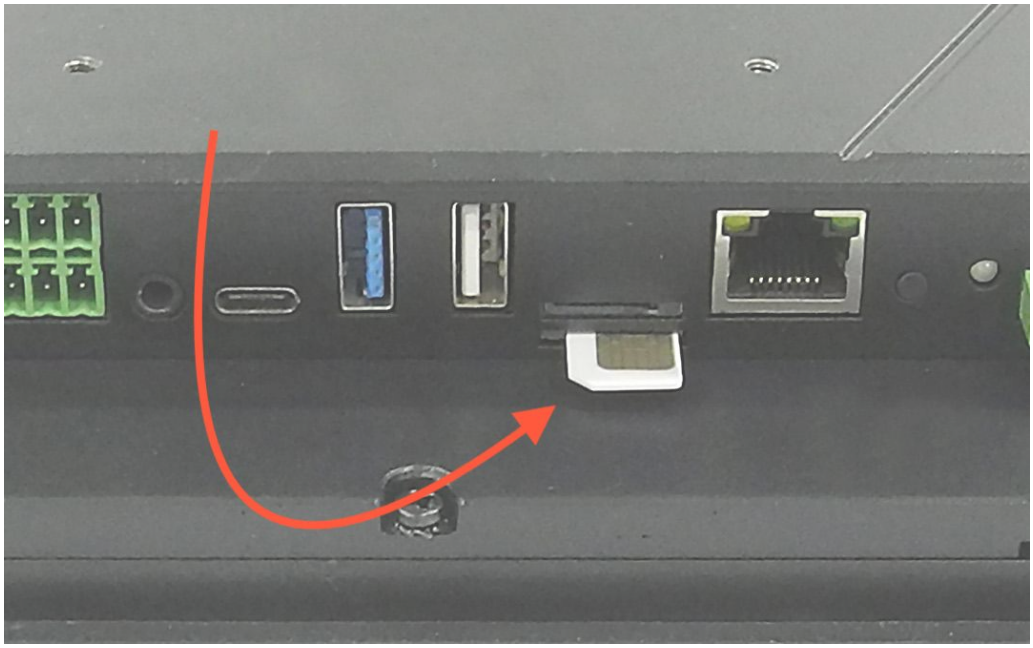

SIM Card Direction

Attention

The product does not come shipped with the 4G/LTE module by default.

TF Card Slot

The PPC-A72-101 Industrial Panel PC features 1 x **TF Card (micro SD) slot**. It can address up to 128GB of memory.

Figure 434: *TF (micro SD) Card Slot*

Note

The product does not come shipped with the TF Card by default.

Audio Connectors

The PPC-A72-101 Industrial Panel PC features some audio peripherals. It has 1 x **3.5mm audio output jack**.
Also, the PPC-A72-101 industrial Pi PC has a miniature 2W internal speaker for audio reproduction, as well as a small buzzer for alarm/notification sounds.

Figure 435: *Audio Connector (enclosed PC version)*

Attention

By plugging in the headphone cable, the internal speaker will be disabled automatically.

In addition, PPC-A72-101 features a miniature 2W embedded speaker for audio reproduction, as well as a small buzzer for alarm/notification sounds.

Figure 436: *2W Micro Speaker and Buzzer*

Power Button

The PPC-A72-101 Industrial Panel PC has a power button, as shown on the figure below. You can use the button to power ON or OFF the industrial PC.

Figure 437: *Power Button*

Mounting Procedure

The PPC-A72-101 Industrial Panel PC can be mounted with 4 x M4 screws, enabling simplified installation onto any standard mounting fixture.

PPC-A72-101

You can mount PPC-A72-101 with the Vesa (75 x 75mm) and Panel mounting methods, as shown on the figure below.

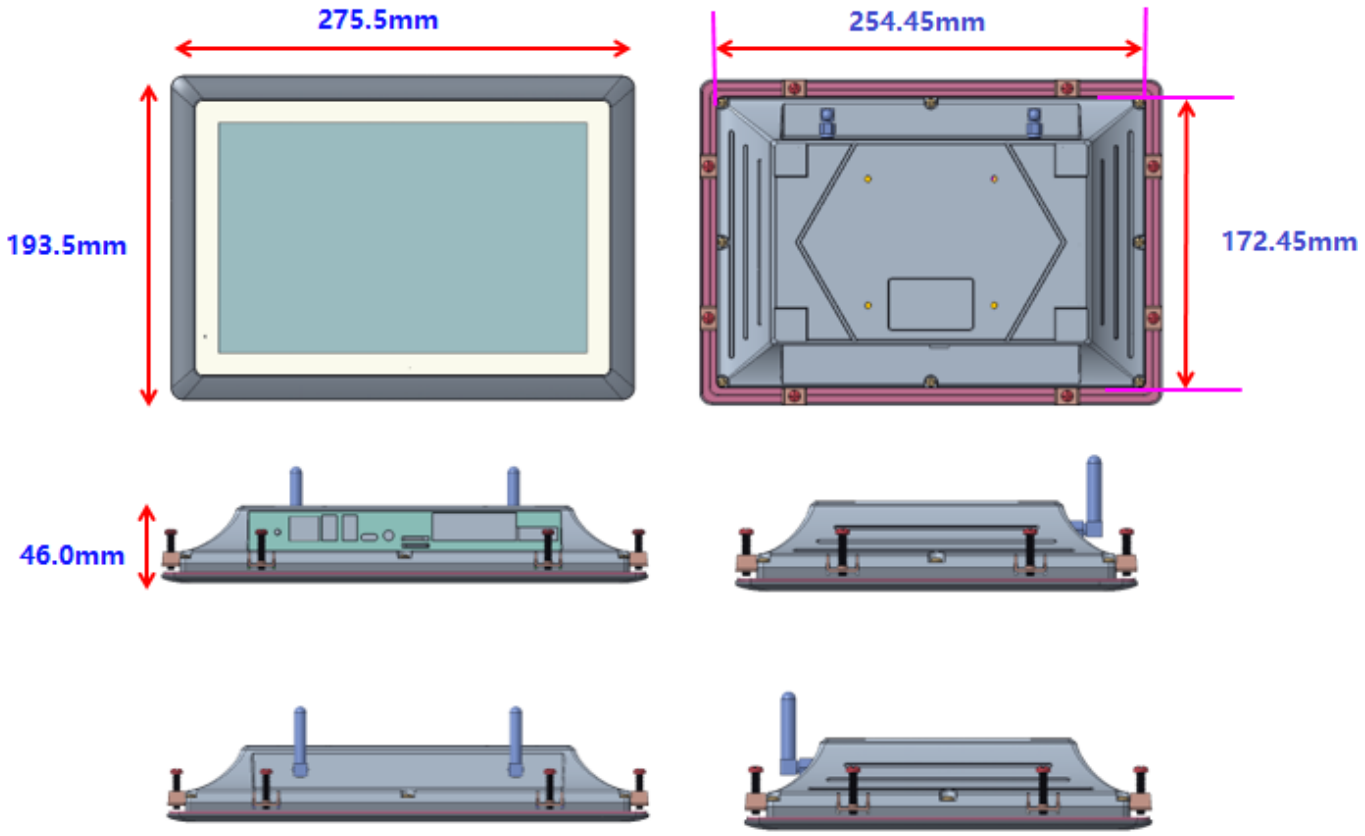

Figure 438: *Panel mounting*

Attention

Please make sure the display is not exposed to high pressure when mounting into an enclosure.

You can find detailed information about mounting in the Mount IPC Guide.

Mechanical Specifications

PPC-A72-101

For PPC-A72-101, the outer mechanical dimensions are 275.5 x 193.5 x 46.0mm (W x L x H).

The cutout dimensions of this 10.1 inch product is 258mm x 176mm.

3D Model

PPC-A72-101 3D model can be viewed in the online doc in a web browser, **if you are reading from the PDF** version, please visit the online doc PPC-A72-101, select hardware documentation, drag the navigation bar to the 3D Model section.

Disclaimer

This document is provided strictly for informational purposes. Its contents are subject to change without notice. Chipsee assumes no responsibility for any errors that may occur in this document. Furthermore, Chipsee reserves the right to alter the hardware, software, and/or specifications set forth herein at any time without prior notice and undertakes no obligation to update the information contained in this document.

While every effort has been made to ensure the accuracy of the information contained herein, this document is not guaranteed to be error-free. Further, it does not offer any warranties or conditions, whether expressed orally or implied in law, including implied warranties and conditions of merchantability or fitness for a particular purpose. We specifically disclaim any liability with respect to this document, and no contractual obligations are formed either directly or indirectly by this document.

Despite our best efforts to maintain the accuracy of the information in this document, we assume no responsibility for errors or omissions, nor for damages resulting from the use of the information herein. Please note that Chipsee products are not authorized for use as critical components in life support devices or systems.

Technical Support

If you encounter any difficulties or have questions related to this document, we encourage you to refer to our other documentation for potential solutions. If you cannot find the solution you're looking for, feel free to contact us. Please email Chipsee Technical Support at **support@chipsee.com**, providing all relevant information. We value your queries and suggestions and are committed to providing you with the assistance you require.