Industrial PC

PPC-A55-101

PN: CS12800-RK3568-101P

Content can change at anytime, check our website for latest information of this product.
www.chipsee.com

Contents

PPC-A55-101 3

1. Product Overview 7

2. 10.1 inch Comparison 8

3. Ordering Options 9

3.1. Operating System 9

3.2. Optional Features 10

4. Hardware Features 11

5. Power Input 13

6. Touch Screen 14

7. Connectivity 15

7.1. RS232+RS485+CAN+GPIO Connector 15

7.2. USB Connectors 18

7.3. LAN Connectors 19

7.4. WiFi & BT Module 20

7.5. 4G/LTE Module 21

8. M.2 SSD Slot 22

9. TF Card & SIM Card Slot 23

10. Audio Connectors 24

11. HDMI Connector 25

12. PROG Button 26

13. Mounting Procedure 27

14. Mechanical Specifications 28

15. Disclaimer 29

16. Technical Support 29

PPC-A55-101

Front View

Rear View

Chipsee
Type:CS12800-RK3568-101P
Rev:C121
OS: Android
SN: 20230104 50001014
https://chipsee.com
Origin:Made in China

Side View 1

Side View 2

Product Overview

The Cortex®-A55 series PPC-A55-101 (PN: CS12800-RK3568-101P) is a high-quality IP65-compliant industrial panel PC. This single board computer features a 10.1” ten-point capacitive touch screen with a resolution of 1280 x 800 pixels and a brightness of 400 cd/m^2.

Key Applications

- Human Machine Interface HMI
- Mobile Applications
- Video Processing
- Machine Learning
- Video Gaming
- Process Control
- Process Monitoring
- ATM...

It is available both as an embedded solution and as a device hosed in an aluminum casing with bezels, thus facilitating different installation options:

- Installation on an industrial cabinet
- Integration with the existing equipment

The PPC-A55-101 Industrial Panel PC is based around the powerful RK3568 System on Chip (SoC), powered by the Rockchip RK3568 low-power processor which integrates a quad-core Cortex®-A55 processor.

The RK3568 supports multi-format video decoders and has a high-performance RAM (LPDDR4X) capable of sustaining demanding memory bandwidths. It also provides a complete set of peripheral interfaces.

10.1 inch Comparison

Chipsee provides two 10.1 inch Rockchip RK3568/RK3568B2 products: PPC-A55-101 and PPC-A55-101S, here is the comparison:

Product	PPC-A55-101	PPC-A55-101S
CPU	RK3568	RK3568B2
RAM	4G	2G
eMMC	32GB	16GB
USB	2 USB-A, 1 USB-C	4 x USB-A
RTC	Farad Cap/Lithium Coin	Lithium Coin
GPIO	8 Optical Isolated GPIO	6 CPU GPIO
CAN	2	N/A
UART	Up to 6	Up to 4
TF Card	Yes	N/A
Buzzer	Yes	N/A
Speaker	Yes	N/A
Dimension	275.5 x 193.5 x 46.0mm	253.20 X 171.83 X 36mm, small and compact

Table 192 Comparison Between the 10.1 inch RK3568/RK3568B2 Products

Ordering Options

Chipsee products can be customized during the ordering process. The product will be shipped with the pre-installed factory defaults if no extra requirements are specified. The table in the Hardware Features section provides information about the default options bundled with the product.

> **Note**
>
> You can order the PPC-A55-101 from the official Chipsee Store or from your nearest distributor.

Operating System

This product comes with a pre-installed OS of your choice. Please see the list below for the supported OSes, which can also be obtained from the Software Documentation section, along with the detailed installation instructions.

- Debian 11
- Android 11
- Buildroot Linux Qt 5.15

> **Warning**
>
> The Software Documentation section provides a detailed instruction on how to install different OSes on your own. However, bear in mind that Chipsee can't take the responsibility of inadequate installation procedure. If you "brick" your device, please contact Chipsee Technical Support at **support@chipsee.com** for further assistance

Optional Features

The PPC-A55-101 Industrial Panel PC does not include 4G/LTE module by default. The module is optional and can be selected at the Chipsee store during the ordering process.

Warning

Installation, repair, and maintenance tasks should be performed by trained personnel only. Chipsee does not bear any responsibility for damage caused by inadequate handling of the product.

Hardware Features

The PPC-A55-101 Industrial Panel PC offers a broad range of performance and connectivity options for scalable integration, providing expandability according to future needs. Some of the key features are listed in the table below.

PPC-A55-101	
CPU	Rockchip RK3568, Quad-core Cortex-A55 (2.0GHz)
RAM	Samsung 4GB LPDDR4X, 4266 Mbps
eMMC	32GB
SSD	Optional, supports M.2 2280 NVME SSD (PCI-E 3.0 x 2)
Storage	TF Card, Supports up to 128GB SDHC
Display	10.1" LCD, 1280 x 800, High Brightness: 400 cd/m^2
HDMI	1 x HDMI OUT
Touch	10-point capacitive touch screen
USB	1 x USB 2.0 HOST, 1 x USB 3.0 HOST, 1 x USB Type-C
LAN	1 x RJ45, GbE
POE	N/A
Audio	3.5mm Audio In/Out Connector, 2W Internal Speaker
Buzzer	Yes
RTC	High accuracy RTC with farad capacitor, can work 1 week after power off **(default)**. High accuracy RTC with lithium coin battery, can work 3 years after power off *(optional)*.
RS232	Default to 2 x RS232 (including 1 debug port). Up to 6 x RS232.1
RS485	Default to 2 x RS485. Optionally, these 2 x RS485 can be configured to RS232.1
CAN	Default to 2 x CAN FD. Optionally, these 2 x CAN FD can be configured to RS232.
GPIO	8 Channels Isolated IO, 4 x Input and 4 x Output
WiFi/BT	Integrated WiFi/BT Module
4G/LTE	Supported, Optional
Power Input	From 12V to 36V
Current	800mA Max at 12V
Power Consumption	9.6W Typical
Working Temperature	From -20°C to +70°C

PPC-A55-101	
OS	Android 11, Debian11, Buildroot Linux Qt 5.15
Dimensions	PPC-A55-101 (PN: CS12800-RK3568-101P): 275.5 x 193.5 x 46.0mm
Weight	PPC-A55-101 (PN: CS12800-RK3568-101P): 1300g
Mounting	PPC-A55-101 (PN: CS12800-RK3568-101P): Panel, VESA

Table 193 Key Features

1(1,2) This product has 4 x UART by default, 6 x UART channels at most. The default configuration is 2 x RS232 and 2 x RS485, including 1 RS232 debug port. The 2 x CAN FD can be configured to RS232. UART can be swapped between RS232 and RS485 modes easily, if you need a different RS232/RS485 configuration, please get in touch with the Chipsee Technical Support at **support@chipsee.com**

Power Input

The PPC-A55-101 Industrial Panel PC can be powered by a wide range of input voltages: From 12V to 36V DC. The power input connector is a **3-pin, 3.81mm terminal**. The polarity and the pinout is clearly marked on the housing of the product as shown in the figure below.

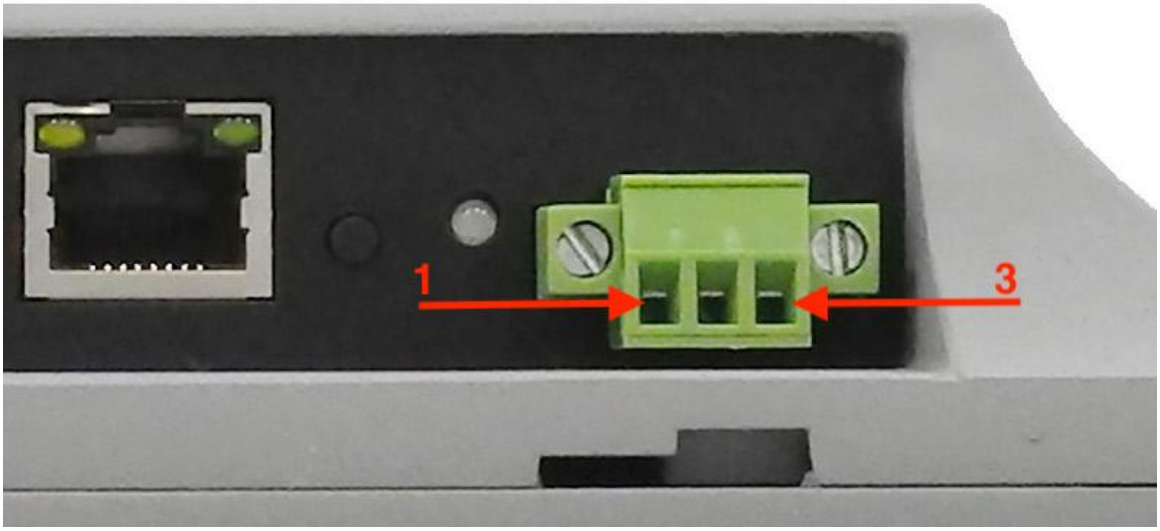

Power Input

Note that the "**+**" sign represents the positive power input, it is printed at the casing and as a silk-screen on a PCB of the embedded version. The "**-**" terminal is shorted to the ground.

Power Input Definition		
Pin Number	**Definition**	**Description**
Pin 1	Positive Input	DC Power **Positive Terminal**
Pin 2	Negative Input	DC Power **Negative Terminal**
Pin 3	Ground	**Power System Ground**

Table 194 Power Connector

> **Note**
>
> The system ground "**G**" is connected to power negative "**-**" on board.

Touch Screen

The PPC-A55-101 Industrial Panel PC uses a 10-point capacitive touch screen. However, the Debian OS supports only One-Point touch.
The figure below shows the capacitive touch screen connected to the motherboard via the **USB connector**.

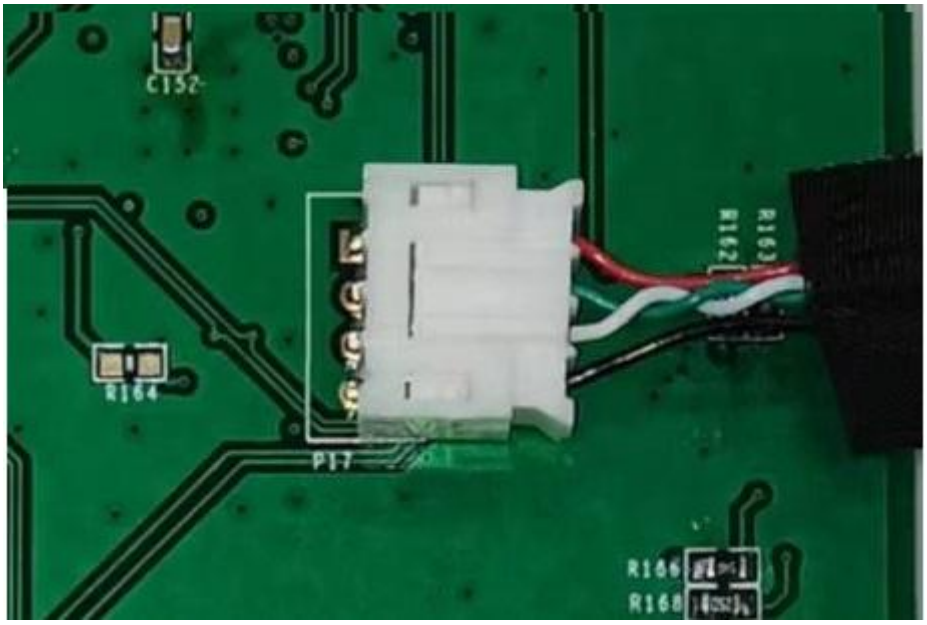

Figure 613: *Capacitive Touch Connector*

Attention

A capacitive touch screen is susceptible to power noise and Electromagnetic Radiation (EMR). It may cause LCD ripples or even capacitive touch malfunction. If using a capacitive multi-touch test application, you might notice the touch points float erratically across the display. There are several solutions to this problem:

1. Use a high-quality Power Adapter Unit (PSU) with low EMR. You can also provide power from a battery.
2. Make sure that the PPC-A55-101 Power Input connector (pin 3) is properly connected to the Power System Ground to provide sufficient EMI shielding and eliminate the problem entirely.
3. Bad GND problem can also be confirmed by touching pin 3 of the Power Input connector with one hand while operating the capacitive touch screen with the other hand. In this case, the operator's body acts as the Power System Ground.

Connectivity

There are many connectivity options available on the PPC-A55-101 industrial PC. It has 1 x USB 2.0 HOST, 1 x USB 3.0 HOST, 1 x USB Type-C, 1 x network connector (RJ45) supporting up to 1 Gbps, 8 x GPIO, 2 x CAN FD and 4 x UART terminals (RS232/485).

RS232+RS485+CAN+GPIO Connector

The serial communication interfaces (RS485, RS232, and CAN FD) are routed to a **24-pin 3.81mm terminal**, as illustrated in the figure below. Serial communication on both RS485 and RS232 interfaces can reach up to 115200 kbps.

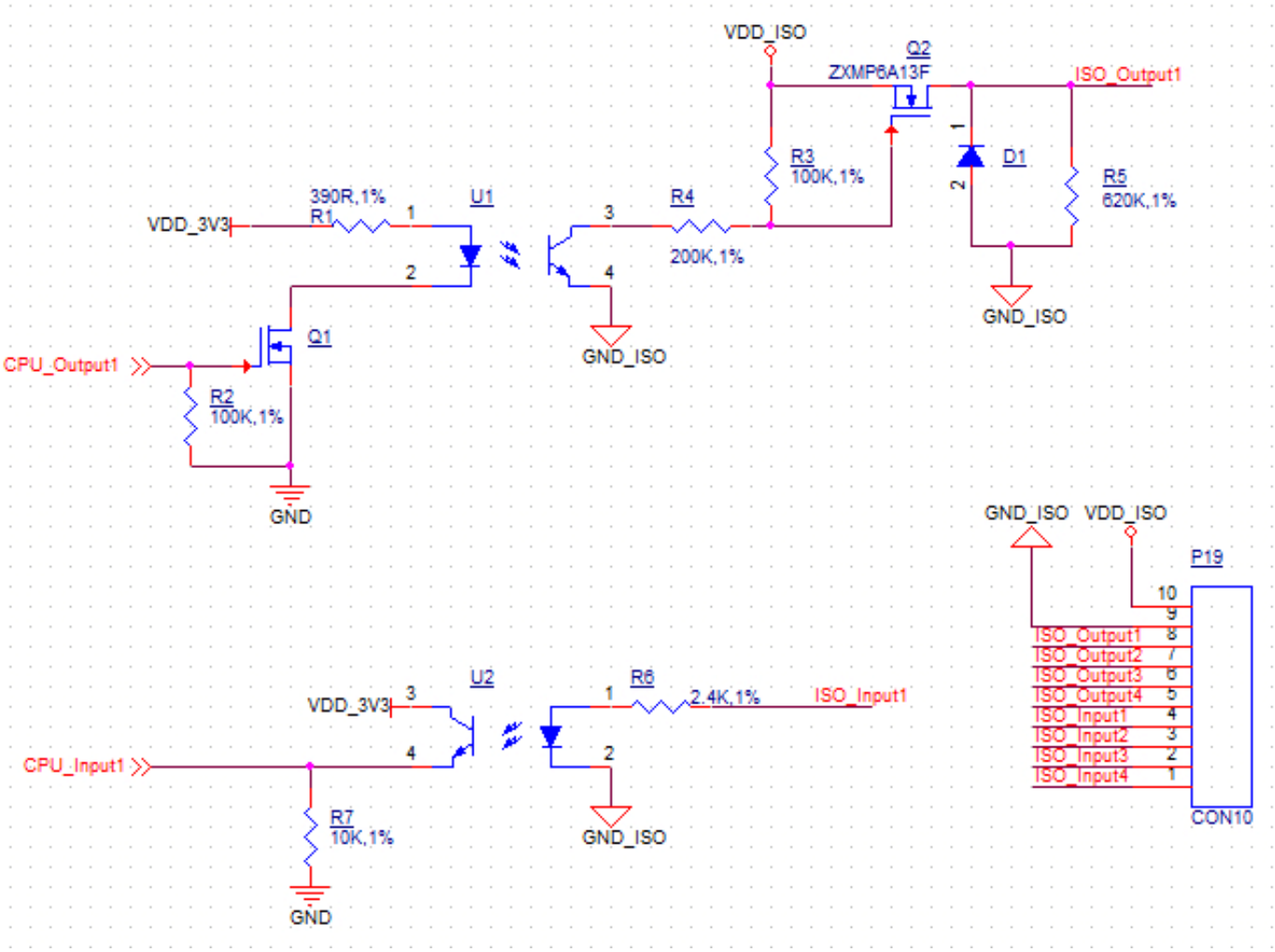

Isolated GPIO reduced schematic

2	4	6	8	10	12	14	16	18	20	22	24
CAN1_H	CAN1_L	IN4	IN3	IN2	IN1	OUT4	OUT3	OUT2	OUT1	GND_ISO	VDD_ISO
1	3	5	7	9	11	13	15	17	19	21	23
CAN0_H	CAN0_L	RS485_4-	RS485_4+	RS485_3-	RS485_3+	RS232_0_RXD	RS232_0_TXD	RS232_2_RXD	RS232_2_TXD	GND	VCC5V

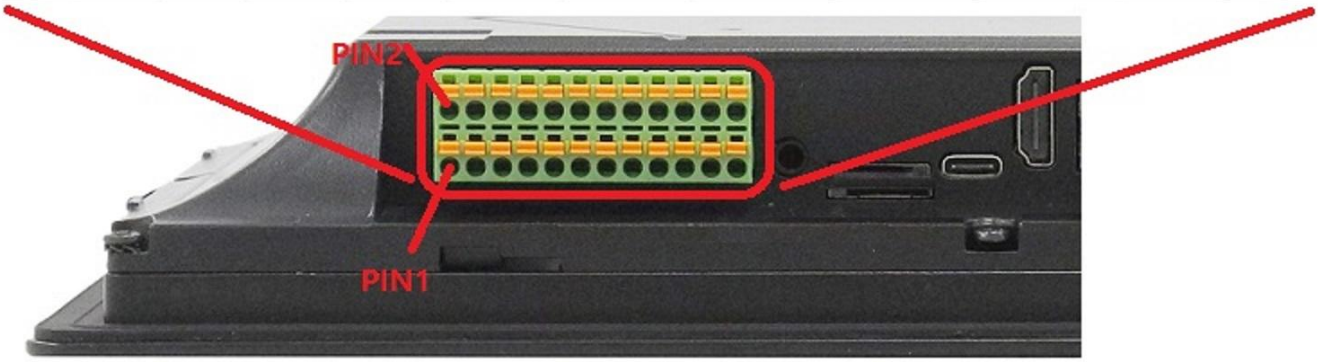

The table below offers a detailed description of every pin:

RS232 / RS485 / CAN / GPIO Pin Definition:		
Pin Number	**Definition**	**Description**
Pin 1	CAN0_H	CAN H signal
Pin 2	CAN1_H	CAN H signal
Pin 3	CAN0_L	CAN L signal
Pin 4	CAN1_L	CAN L signal
Pin 5	RS485_4-	CPU UART4, RS485 -(B) signal
Pin 6	IN4	Isolated Input 4
Pin 7	RS485_4+	CPU UART4, RS485 +(A) signal
Pin 8	IN3	Isolated Input 3
Pin 9	RS485_3-	CPU UART3, RS485 -(B) signal
Pin 10	IN2	Isolated Input 2
Pin 11	RS485_3+	CPU UART3, RS485 +(A) signal
Pin 12	IN1	Isolated Input 1
Pin 13	RS232_0_RXD	CPU UART0, RS232 RXD signal
Pin 14	OUT4	Isolated Output 4
Pin 15	RS232_0_TXD	CPU UART0, RS232 TXD signal
Pin 16	OUT3	Isolated Output 3
Pin 17	RS232_2_RXD	CPU UART2, Debug RXD signal
Pin 18	OUT2	Isolated Output 2
Pin 19	RS232_2_TXD	CPU UART2, Debug TXD signal
Pin 20	OUT1	Isolated Output 1

RS232 / RS485 / CAN / GPIO Pin Definition:		
Pin 21	GND	System Ground
Pin 22	GND_ISO	Isolated Ground
Pin 23	VCC5V	System 5V output, up to 1A
Pin 24	VDD_ISO	Isolated Power Input, supports 5V~24V

Table 195 Connectivity Section

Attention

- The 120Ω match resistor for **CAN** bus is **NOT mounted** by default.
- The 120Ω match resistor for **RS485** is **already mounted** by default.
- This product supports changing 2 x RS485 to 2 x RS232, supports changing 2 x CAN to 2 x RS232, providing up to 6 x RS232 (including one debug port).
- The GPIO has been optical isolated and it uses the 24V logic by default. You can use an external isolated power input but the power input range should be from 5V to 24V DC.
- The 4 GPIO output channels can drive at most 500mA current on each channel.

USB Connectors

There are 2 x **USB HOST** and 1 x **USB DEVICE** (for flashing OS) ports onboard: 1 x USB 2.0 HOST, 1 x USB 3.0 HOST, 1 x USB Type-C , as shown in the figures below.

USB 2.0 HOST Port (embedded / enclosed PC version)

USB 3.0 HOST Port (embedded / enclosed PC version)

USB Type-C Port (embedded / enclosed PC version)

Warning

Be careful not to touch surrounding electronic components accidentally while plugging USB devices into the embedded IPC version.

LAN Connectors

LAN (RJ45) connector provides 1 x RJ45 Ethernet connectivity over standardized Ethernet cables as shown in the figure below. The integrated Ethernet interface supports up to 1 Gbps data throughput.

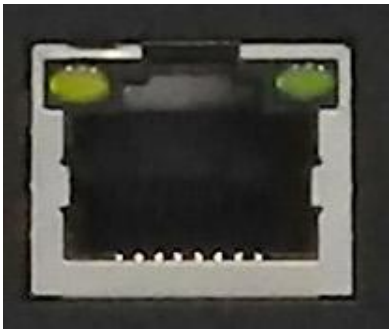

RJ45 LAN Connector

Note

Use CAT5 or better cables to achieve full data throughput over maximum distance defined by the 1000BASE-T standard (100m).

WiFi & BT Module

The PPC-A55-101 Industrial Panel PC is equipped with the popular **Realtek RTL8821CS WiFi/BT module** which supports BT/BLE 2.1/3.0/4.2, as well as 802.11ac/abgn 433Mbps 2.4/5.8 GHz Wireless LAN (WLAN).

Figure 614: *RTL8821CS WiFi/BT Module*

The PPC-A55-101 includes an SMA connector for an external WiFi/BT antenna, as illustrated in the figure below.

WiFi+BT Antenna SMA

4G/LTE Module

The PPC-A55-101 Industrial Panel PC is equipped with a **mini-PCIe connector** that can connect a 4G/LTE module. The customer will also need a SIM Card Holder and a 4G/LTE Antenna Connector to ensure 4G/LTE works on the PPC-A55-101. SIM card does **NOT** support hot plug. **Power off** before inserting or removing SIM card.

Figure 615: *mini-PCIe Connector & 4G Module*

Figure 616: *SIM Card Holder & 4G Antenna*

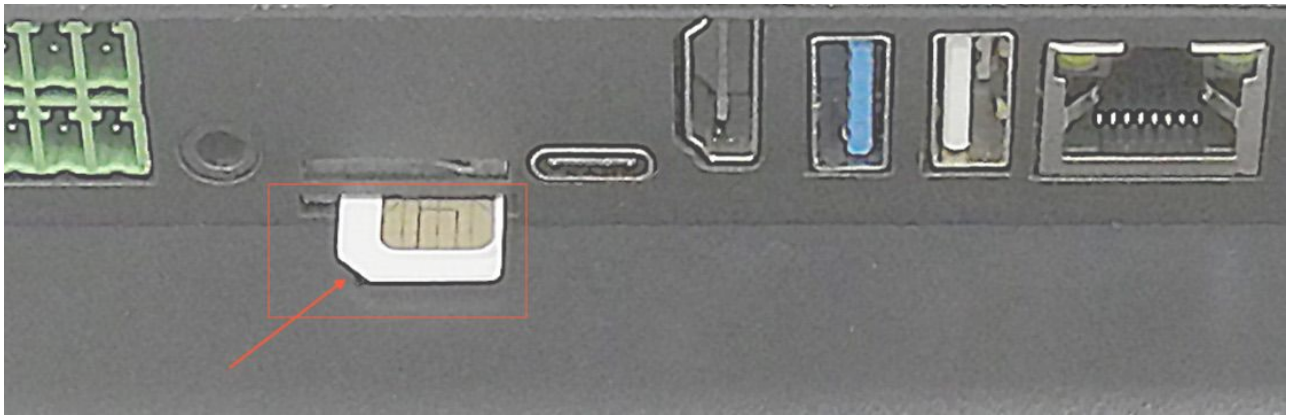

SIM Card Direction

Attention

The product does not come shipped with the 4G/LTE module by default. The customer can choose the 4G/LTE module option when placing an order, we will install all the necessary components.

M.2 SSD Slot

There is a M.2 slot on the PPC-A55-101 that allows an optional SSD. The M.2 slot is capable of holding a PCI-E 3.0 x 2, 2280 NVME SSD. The PPC-A55-101 does not come shipped with an SSD by default, if you want a different configuration you can consult us when placing an order.

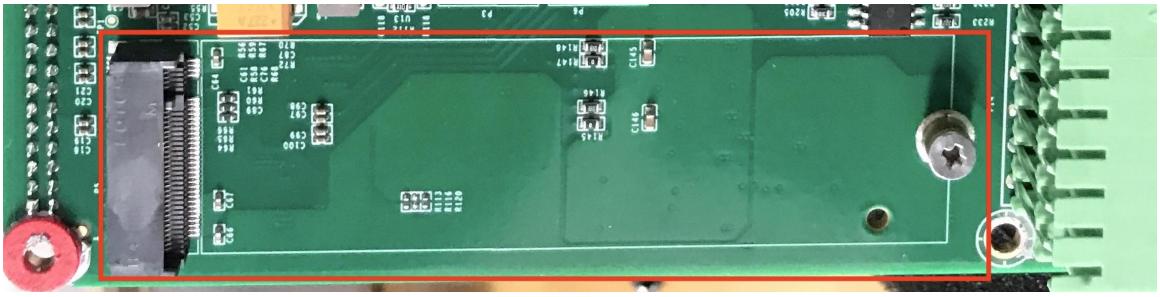

M.2 2280 Slot for PCI-E 3.0 x 2 NVME SSD

TF Card & SIM Card Slot

The PPC-A55-101 Industrial Panel PC features 1 x **TF Card (micro SD) slot** and 1 x **SIM Card slot**. TF Card can address up to 128GB of storage.

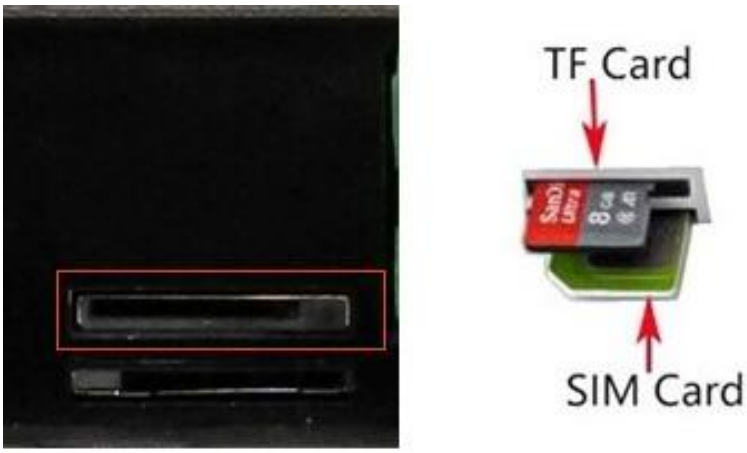

TF (micro SD) Card & SIM Card Slot

Note

The product does not come shipped with the TF Card by default.

Audio Connectors

The PPC-A55-101 Industrial Panel PC features some audio peripherals. It has a **3.5mm audio input/output jack**, an **internal speaker**, as well as a small **buzzer**.

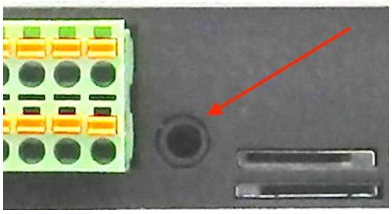

Audio Connector (enclosed PC version)

The miniature 2W embedded speaker is handy for audio reproduction, the small buzzer can play alarm/notification sounds.

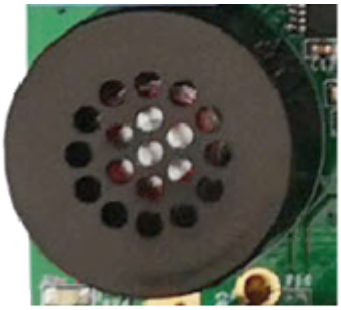

Figure 617: *2W Micro Speaker and Buzzer*

Attention

By plugging in the headphone cable, the internal speaker will be disabled automatically.

HDMI Connector

The PPC-A55-101 Industrial Panel PC is equipped with 1 x HDMI OUT port. The HDMI connector allows connecting an additional (external) monitor. HDMI output resolution can be configured by the software.

HDMI Connector

PROG Button

The PPC-A55-101 Industrial Panel PC has one button on the board marked as PROG, as shown in the figure below.
When the button is pressed before powering up, the PPC-A55-101 will enter MASKROM mode. In this mode you can use a USB Type-C cable to upgrade its operating system. You can use this feature to flash another OS to the internal eMMC.

When the button is not pressed before and during power up, the PPC-A55-101 will boot normally.

There is no need to press the button during regular operation. However, if you need to flash the OS in MASKROM mode, the button will be used. Please refer to the software documents for more information.

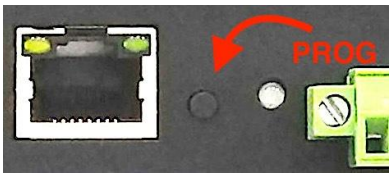

PROG Button

Mounting Procedure

You can mount PPC-A55-101 with VESA mounting: **100 x 100** mm, 4 x **M4** (6mm) screws.

You can also mount PPC-A55-101 with panel mounting method.

> **Attention**
>
> Please make sure the display is not exposed to high pressure when mounting into an enclosure.

You can find detailed information about mounting in the Mount IPC Guide.

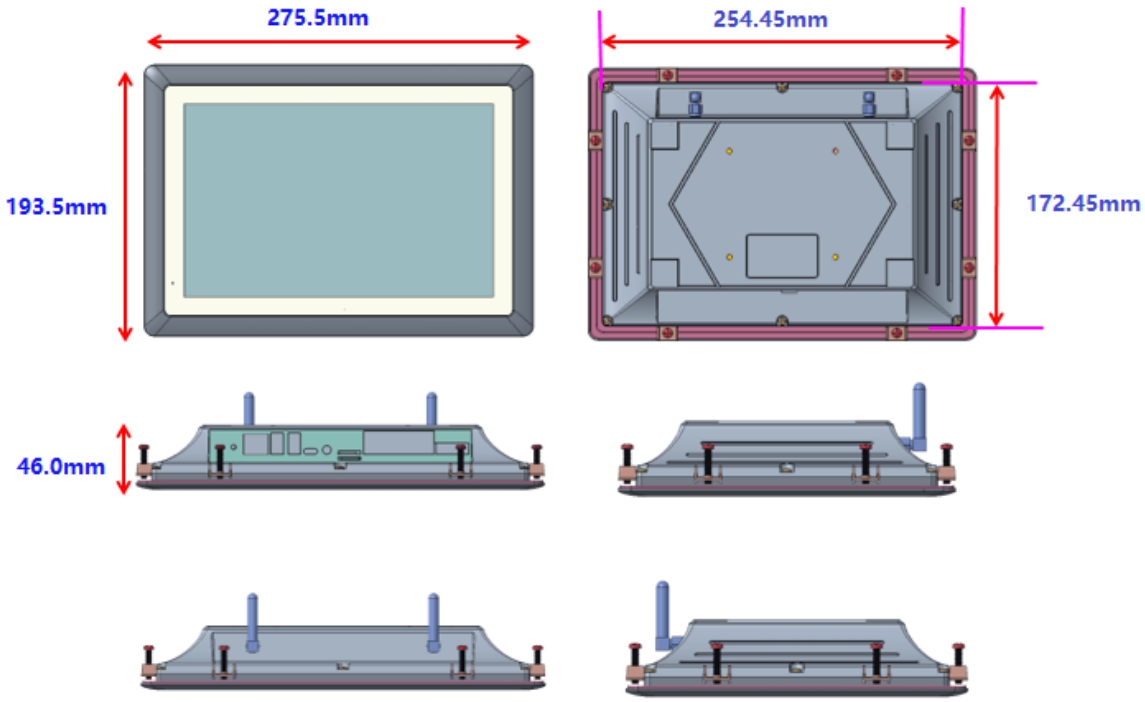

Panel mounting (PPC-A55-101)

Mechanical Specifications

For PPC-A55-101, the outer mechanical dimensions are 275.5 x 193.5 x 46.0mm (W x L x H).

The cutout dimensions of this 10.1 inch product is 258mm x 176mm.

Disclaimer

This document is provided strictly for informational purposes. Its contents are subject to change without notice. Chipsee assumes no responsibility for any errors that may occur in this document. Furthermore, Chipsee reserves the right to alter the hardware, software, and/or specifications set forth herein at any time without prior notice and undertakes no obligation to update the information contained in this document.

While every effort has been made to ensure the accuracy of the information contained herein, this document is not guaranteed to be error-free. Further, it does not offer any warranties or conditions, whether expressed orally or implied in law, including implied warranties and conditions of merchantability or fitness for a particular purpose. We specifically disclaim any liability with respect to this document, and no contractual obligations are formed either directly or indirectly by this document.

Despite our best efforts to maintain the accuracy of the information in this document, we assume no responsibility for errors or omissions, nor for damages resulting from the use of the information herein. Please note that Chipsee products are not authorized for use as critical components in life support devices or systems.

Technical Support

If you encounter any difficulties or have questions related to this document, we encourage you to refer to our other documentation for potential solutions. If you cannot find the solution you're looking for, feel free to contact us. Please email Chipsee Technical Support at **support@chipsee.com**, providing all relevant information. We value your queries and suggestions and are committed to providing you with the assistance you require.