Industrial PC

PPC-RK3576-101

PN: CS12800-RK3576-101P

Content can change at anytime, check our website for latest information of this product.
www.chipsee.com

Contents

PPC-RK3576-101 3

1. Product Overview 7

2. Ordering Options 8

2.1. Operating System 8

2.2. Optional Features 9

3. Hardware Features 10

4. Power Input 12

4.1. Ignition Signal 13

5. Touch Screen 14

6. Connectivity 15

6.1. RS232+RS485+CAN 15

6.2. GPIO 17

6.3. USB Connectors 20

6.4. LAN Connector 21

6.5. WiFi & BlueTooth Module 22

6.6. 4G/LTE Module 23

7. M.2 Slot 25

8. TF Card Slot 26

9. Audio Connectors 27

10. HDMI Connector 28

11. PROG Button 29

12. Mounting Procedure 30

13. Mechanical Specifications 32

14. Disclaimer 33

15. Technical Support 33

PPC-RK3576-101

Front View

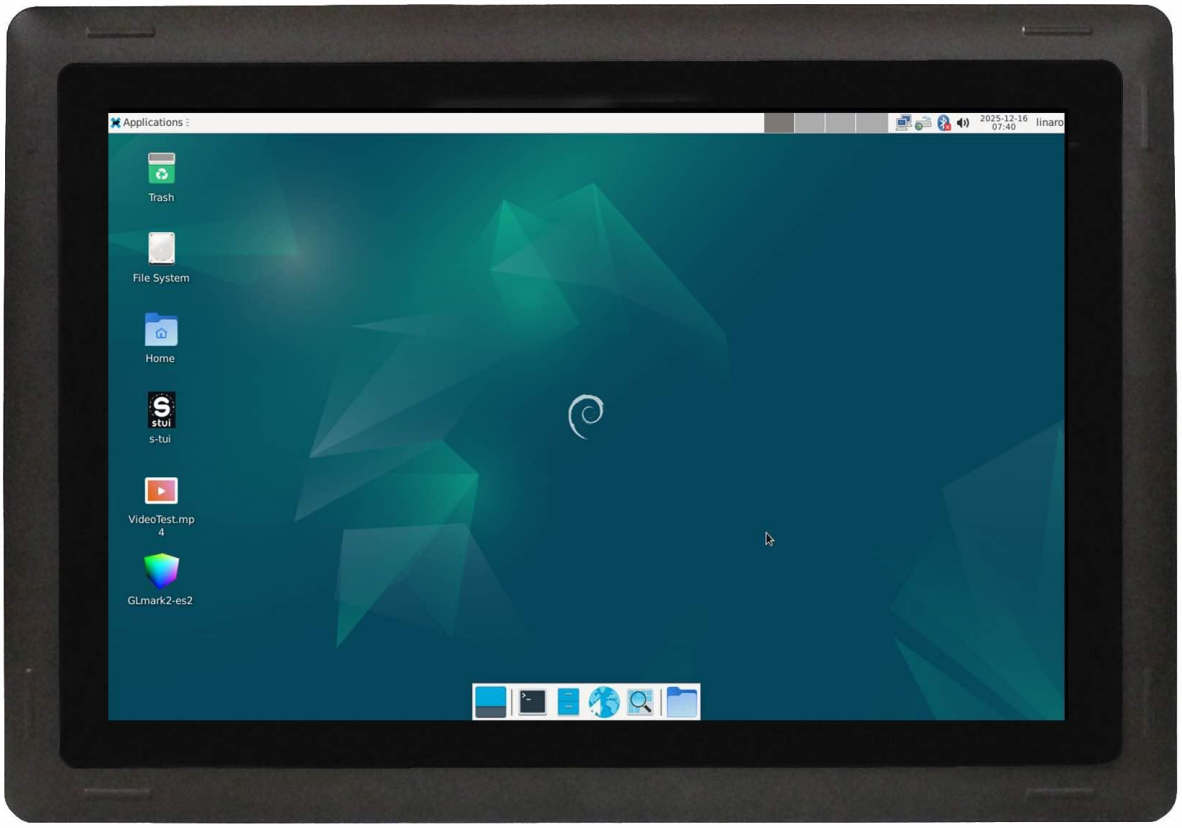

Rear View

Chipsee
Type:CS12800-RK3576-101P
Rev:G-C111
OS: Debian 12
SN: 20251216100031 44
https://chipsee.com
Origin:Made in China

Side View 1

Side View 2

Product Overview

The Cortex®-A72+ Cortex®-A53 series PPC-RK3576-101 (PN: CS12800-RK3576-101P) is a high-quality IP65-compliant industrial panel PC. This single board computer features a 10.1” ten-point capacitive touch screen with a resolution of 1280 x 800 pixels and a brightness of 480 cd/m^2.

Key Applications

- Human Machine Interface HMI
- Mobile Applications
- Video Processing
- Machine Learning
- Video Gaming
- Process Control
- Process Monitoring
- ATM...

It is available as a device hosed in an aluminum casing with bezels, thus facilitating different installation options:

- Installation on an industrial cabinet
- Integration with the existing equipment

The PPC-RK3576-101 Industrial Panel PC is based around the powerful RK3576 System on Chip (SoC), powered by the Rockchip RK3576 low-power processor which integrates a Quad-core Cortex-A72(1.6GHz) + Quad-core Cortex-A53(1.4GHz) processor, and a 6 TOPS(Sparsity)@INT8 computing power NPU (neural processing unit).

The RK3576 supports multi-format video decoders and has a high-performance 4GB LPDDR5 RAM capable of sustaining demanding memory bandwidth. It also provides a complete set of peripheral interfaces.

Ordering Options

Chipsee products can be customized during the ordering process. The product will be shipped with the pre-installed factory defaults if no extra requirements are specified. The table in the Hardware Features section provides information about the default options bundled with the product.

> **Note**
>
> You can order the PPC-RK3576-101 from the official Chipsee Store or from your nearest distributor.

Operating System

This product comes with a pre-installed OS of your choice. Please see the list below for the supported OSes, which can also be obtained from the Software Documentation section, along with the detailed installation instructions.

- Android 14
- Debian 12
- Buildroot Linux Qt 5.15

> **Warning**
>
> The Software Documentation section provides a detailed instruction on how to install different OSes on your own. However, bear in mind that Chipsee can't take the responsibility of inadequate installation procedure. If you "brick" your device, please contact Chipsee Technical Support at **support@chipsee.com** for further assistance

Optional Features

The PPC-RK3576-101 Industrial Panel PC does not include 4G/LTE module by default. The module is optional and can be selected at the Chipsee store during the ordering process.

The PPC-RK3576-101 Industrial Panel PC does not include M.2 NVMe SSD module by default. The module is optional and can be selected at the Chipsee store during the ordering process.

The PPC-RK3576-101 Industrial Panel PC does not include PoE(Power over Ethernet) module by default. The module is optional and can be selected at the Chipsee store during the ordering process.

Warning

Installation, repair, and maintenance tasks should be performed by trained personnel only. Chipsee does not bear any responsibility for damage caused by inadequate handling of the product.

Hardware Features

The PPC-RK3576-101 Industrial Panel PC offers a broad range of performance and connectivity options for scalable integration, providing expandability according to future needs. Some of the key features are listed in the table below.

PPC-RK3576-101	
CPU	Rockchip RK3576J, Quad-core Cortex-A72 (1.6GHz) + Quad-core Cortex-A53 (1.4GHz)
RAM	4GB LPDDR5
NPU	6 TOPS(Sparsity)@INT8
eMMC	64GB
Storage	TF Card, Supports up to 128GB SDHC
PCIe	Optional, supports M.2 M-Key 2230/2242/2260/2280 (PCI-E 3.0 x1) module
Display	10.1" LCD, 1280 x 800, High Brightness: 480 cd/m^2
Touch	10-point capacitive touch screen with 1mm Armored Glass
HDMI	1 x HDMI OUT
USB	1 x USB 2.0 HOST, 1 x USB 3.0 HOST, 1 x USB Type-C (USB3.0 port and USB-C port cannot be used at the same time)
LAN	1 x RJ45, GbE
POE	Optional, Power Over Ethernet 802.3af/at
Audio	3.5mm Audio In/Out Connector, 2W Internal Speaker
Buzzer	Yes
RTC	High accuracy RTC with farad capacitor, can work 1 week after power off **(default)**. High accuracy RTC with lithium coin battery, can work 3 years after power off *(optional)*.
RS232	Default to 2 x RS232 (including 1 debug port). Up to 6 x RS232.1
RS485	Default to 2 x RS485. Optionally, these 2 x RS485 can be configured to RS232.1
CAN	Default to 2 x CAN FD. Optionally, these 2 x CAN FD can be configured to RS232.
GPIO	8 Channels Isolated IO, 4 x Input and 4 x Output
WiFi/BT	Integrated WiFi/BT Module
4G/LTE	Supported, Optional
Power Input	From 15V to 30V (supports optional 24V ignition signal)
Current	600mA Max at 15V
Power Consumption	7.5W Typical

PPC-RK3576-101	
Working Temperature	From -20°C to +70°C
OS	Android 14, Debian12, Buildroot Linux Qt 5.15
Dimensions	PPC-RK3576-101 (PN: CS12800-RK3576-101P): 275.5 x 193.5 x 46.0mm
Weight	PPC-RK3576-101 (PN: CS12800-RK3576-101P): 1300g
Mounting	PPC-RK3576-101 (PN: CS12800-RK3576-101P): Panel, VESA

Key Features

1(1,2) This product has 4 x UART by default, 6 x UART channels at most. The default configuration is 2 x RS232 and 2 x RS485, including 1 RS232 debug port. The 2 x CAN FD can be configured to RS232. UART can be swapped between RS232 and RS485 modes easily, if you need a different RS232/RS485 configuration, please get in touch with the Chipsee Technical Support at **support@chipsee.com**

Power Input

The PPC-RK3576-101 Industrial Panel PC can be powered by a wide range of input voltages: From 15V to 30V (supports optional 24V ignition signal) DC.

It is a **3 Pin, 3.81mm screw terminal** connector. As shown in the figure below.

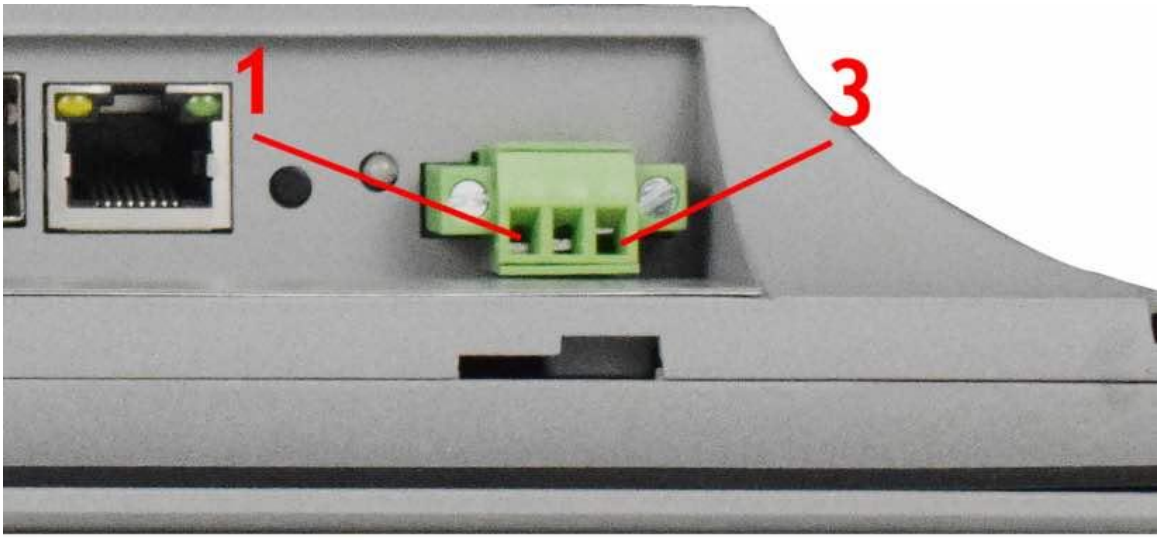

Power Input

Note that the "**+**" sign represents the positive power input. The "**-**" terminal is shorted to the ground.

Power Input Definition		
Pin Number	**Definition**	**Description**
Pin 1	Positive Input	DC Power **Positive Terminal**
Pin 2	Negative Input	DC Power **Negative Terminal**
Pin 3	Ground	**Power System Ground**

Power Connector

> **Note**
>
> The system ground "**G**" is connected to power negative "**-**" on board.

Ignition Signal

The product has a “ignition signal” **optional** feature. By default the ignition signal is not installed. If you need this feature you can contact us when placing an order. In this setup, Pin 3 is the ignition signal pin.

To use this feature, apply a 24V DC input (relative to -) to Pin 3. If Pin 3 detects a low input voltage, the product will be shutdown. If Pin 3 detects a high input voltage, the product will be boot and running.

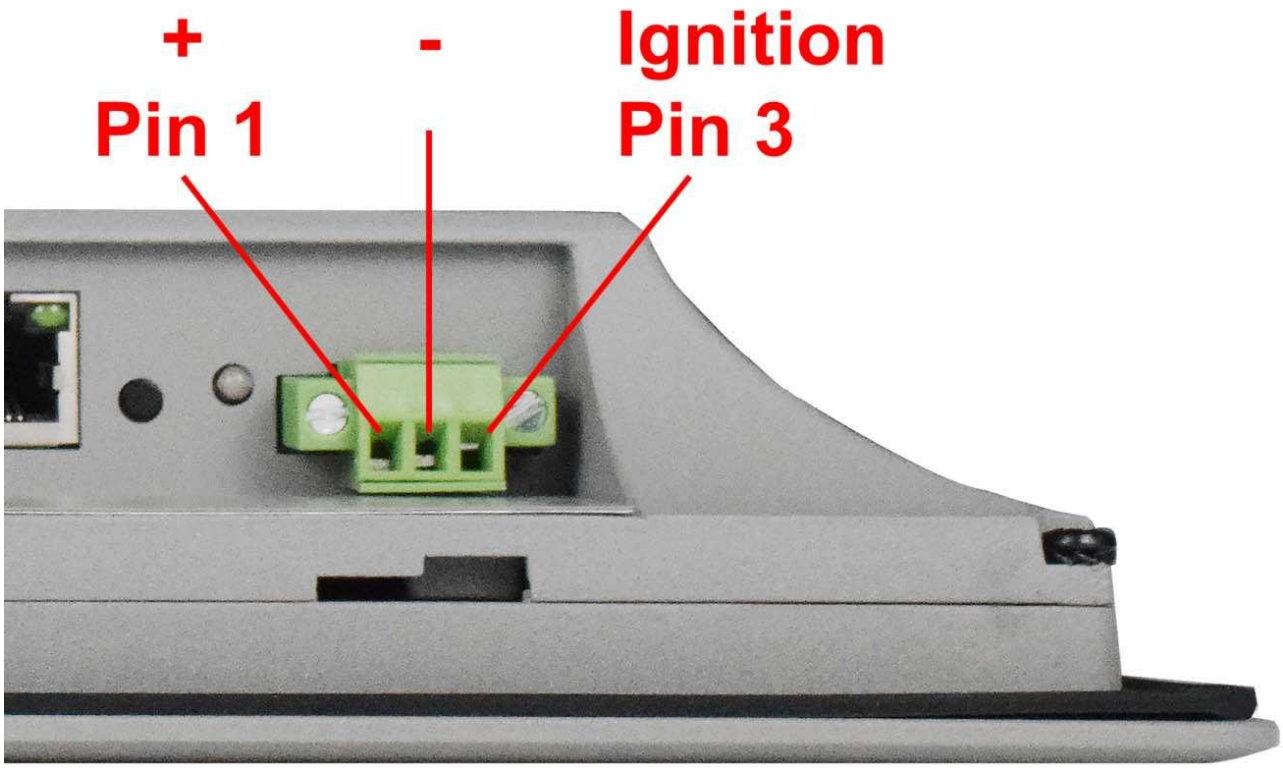

Power Input (with Ignition Signal)

Power Input Definition		
Pin Number	**Definition**	**Description**
Pin 1	Positive Input	DC Power **Positive Terminal**
Pin 2	Negative Input	DC Power **Negative Terminal**
Pin 3	Ignition	**Ignition Signal**

Power Connector with Ignition Signal

Touch Screen

The PPC-RK3576-101 Industrial Panel PC uses a 10-point capacitive touch screen with 1mm Armored Glass. However, the Debian OS supports only One-Point touch.

The figure below shows the capacitive touch screen connected to the motherboard via the USB connector.

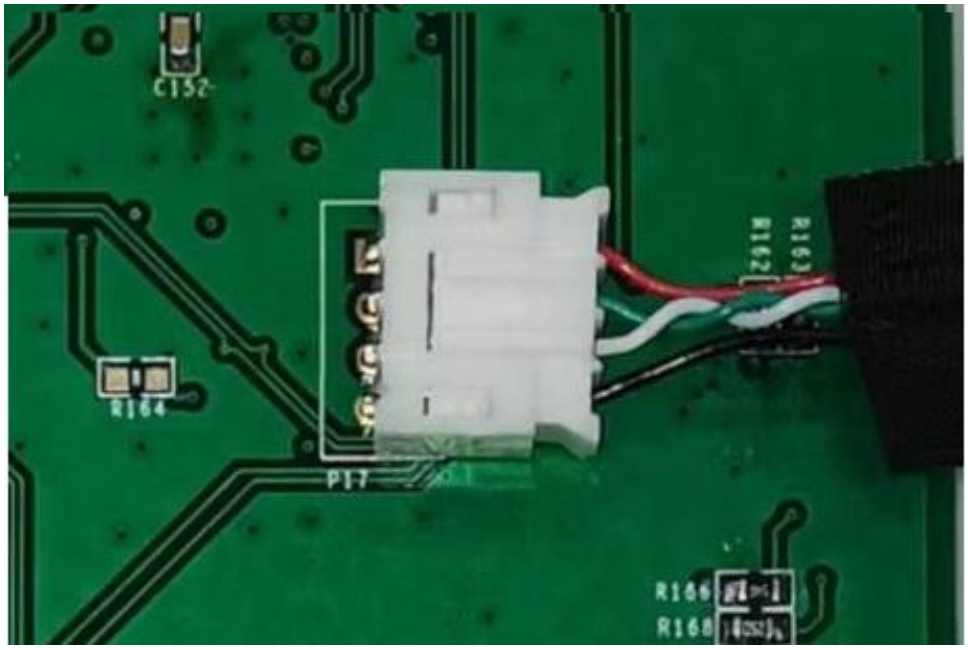

Capacitive Touch Connector

Attention

A capacitive touch screen is susceptible to power noise and Electromagnetic Radiation (EMR). It may cause LCD ripples or even capacitive touch malfunction. If using a capacitive multi-touch test application, you might notice the touch points float erratically across the display. There are several solutions to this problem:

1. Use a high-quality Power Adapter Unit (PSU) with low EMR. You can also provide power from a battery.
2. Make sure that the PPC-RK3576-101 Power Input connector (pin 3) is properly connected to the Power System Ground to provide sufficient EMI shielding and eliminate the problem entirely.
3. Bad GND problem can also be confirmed by touching pin 3 of the Power Input connector with one hand while operating the capacitive touch screen with the other hand. In this case, the operator's body acts as the Power System Ground.

Connectivity

There are many connectivity options available on the PPC-RK3576-101 industrial PC. It has 1 x USB 2.0 HOST, 1 x USB 3.0 HOST, 1 x USB Type-C, 1 x network connector (RJ45) supporting up to 1 Gbps, 8 x GPIO, 2 x CAN FD and 4 x UART terminals (RS232/485).

RS232+RS485+CAN

The serial communication interfaces (RS485, RS232, and CAN FD) are routed to a **24-pin 3.81mm terminal**, as illustrated in the figure below. Serial communication on both RS485 and RS232 interfaces can reach up to 115200 kbps.

PIN2	PIN4										
CAN1_H	CAN1_L										
PIN1	PIN3	PIN5	PIN7	PIN9	PIN11	PIN13	PIN15	PIN17	PIN19	PIN21	PIN23
CAN0_H	CAN0_L	RS485_5B	RS485_5A	RS485_3B	RS485_3A	RS232_2RX	RS232_2TX	RS232_0RX	RS232_0TX	GND	5V

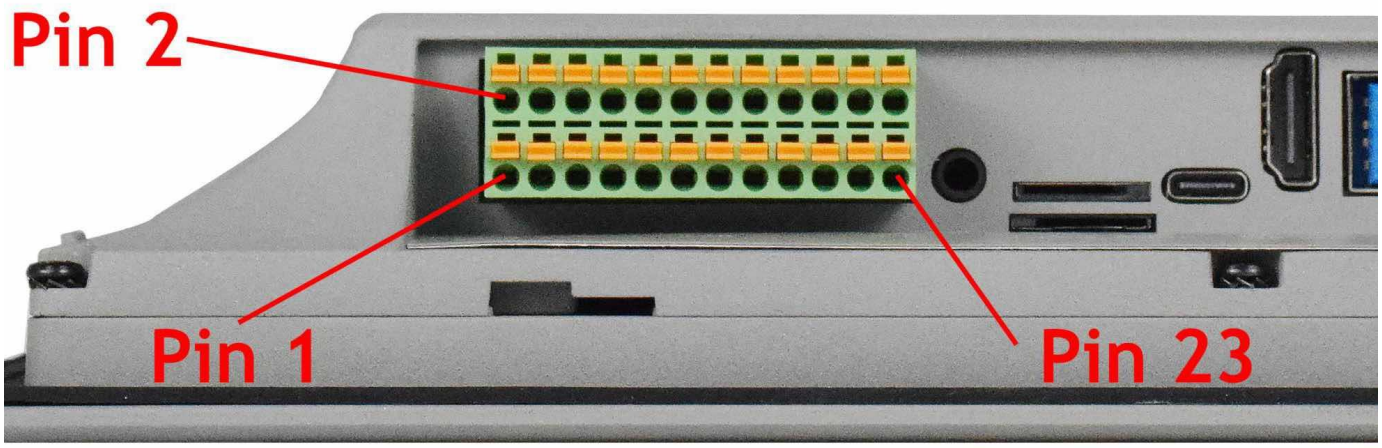

Attention

- The 120Ω match resistor for **CAN** bus is **NOT mounted** by default.
- The 120Ω match resistor for **RS485** is **already mounted** by default.
- This product supports changing 2 x RS485 to 2 x RS232, supports changing 2 x CAN to 2 x RS232, providing up to 6 x RS232 (including one debug port).

The table below offers a detailed description of every pin:

RS232 / RS485 / CAN				
Pin Number	**Definition**	**Description**	**CPU**	**OS Node**
Pin 1	CAN0_H	CAN H signal	CAN0_M3	CAN0

RS232 / RS485 / CAN				
Pin 3	CAN0_L	CAN L signal		
Pin 5	RS485_5-	RS485 -(B) signal	UART5	/dev/ttyS5
Pin 7	RS485_5+	RS485 +(A) signal		
Pin 9	RS485_3-	RS485 -(B) signal	UART3	/dev/ttyS3
Pin 11	RS485_3+	RS485 +(A) signal		
Pin 13	RS232_2_RXD	RS232 RXD signal	UART2	/dev/ttyS2
Pin 15	RS232_2_TXD	RS232 TXD signal		
Pin 17	RS232_0_RXD	Debug RXD signal	UART0	/dev/ttyFIQ
Pin 19	RS232_0_TXD	Debug TXD signal		
Pin 21	GND	System Ground		
Pin 23	5V	System 5V output, up to 1A		
Pin 2	CAN1_H	CAN H signal	CAN1_M2	CAN1
Pin 4	CAN1_L	CAN L signal		

RS232/RS485/CAN

GPIO

The PPC-RK3576-101 Industrial Panel PC features a **phoenix connector** that provides 8 x opto-isolated GPIO pins, of which 4 x are output, and 4 x are input pins.

The GPIO **HIGH** output level corresponds to the voltage connected at the isolated Power Input, while the GPIO **LOW** output level corresponds to the isolated Ground Input.

The GPIO uses the 24V logic by default. You can use an external isolated power input but the power input range should be from 5V to 24V DC.

Attention

1. In order to use the Isolated Output, you need to add an external Isolated Power to the VDD_ISO and GND_ISO. The power voltage should not exceed 24V.
2. The output current can supply 500mA for every channel, but it also depends on the isolated power that is connected.
3. In order to use the Isolated Input, you need to add a signal to the InputX and GND_ISO. A 2.4KΩ resistor has been added to limit the input current, as shown in the figure below. This resistor should work well for the 5-24V input signal. If your input signal is less than 5V, please change this input resistor. The reduced schematic is for reference purpose, if you need the precise resistor schematic, please contact us.
4. If the isolation is not a requirement, it is possible to use a non-isolated PSU instead. It is also possible to use the onboard 5V power supply: it can be re-routed to the *Isolated Power Input* pin by populating two PCB resistor footprints with 0Ω resistors. In this case, the *Isolated Power Input* pin will become an output for the onboard 5V power supply.

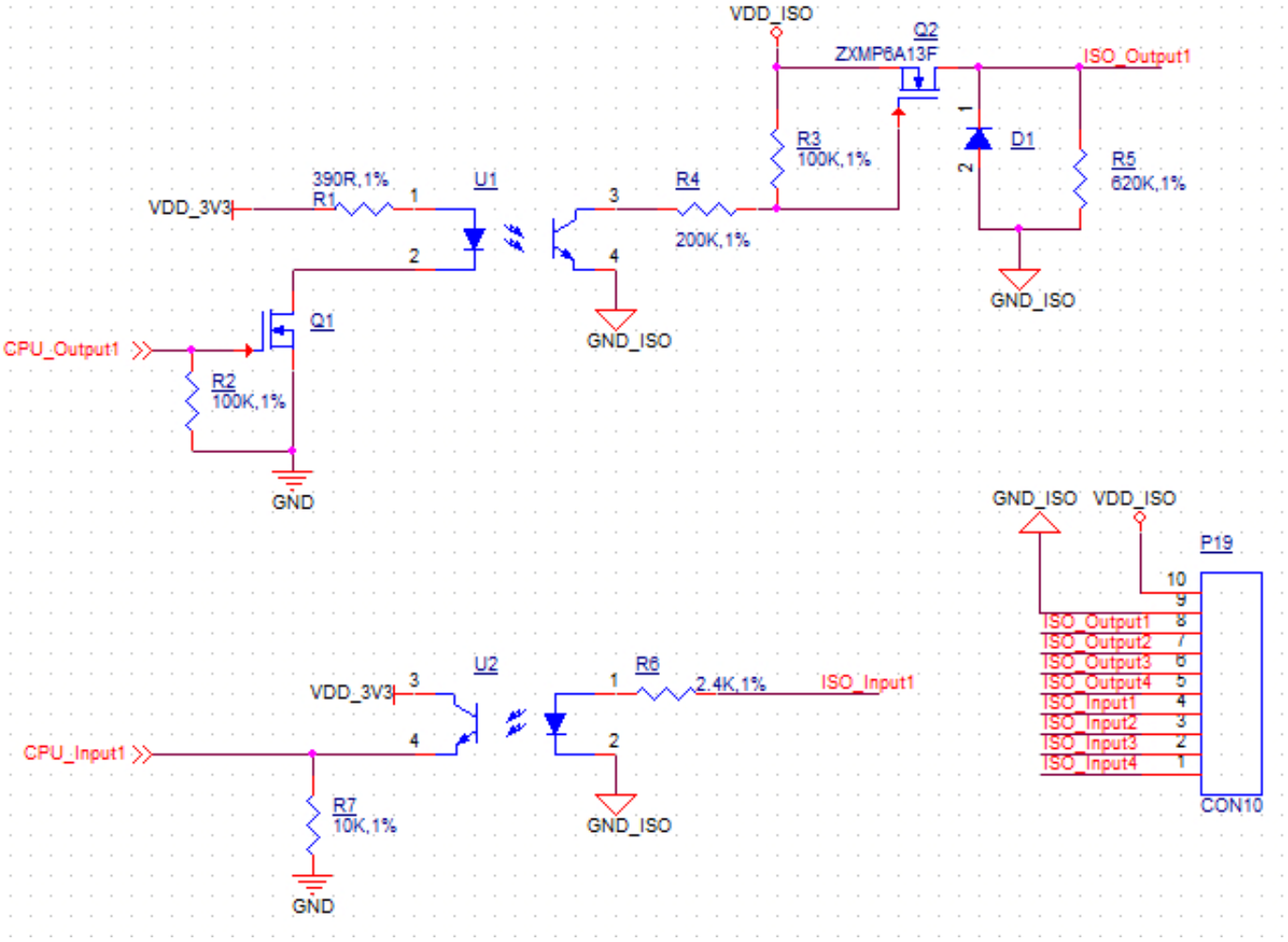

Isolated GPIO reduced schematic

PIN6	PIN8	PIN10	PIN12	PIN14	PIN16	PIN18	PIN20	PIN22	PIN24
IN4	IN3	IN2	IN1	OUT4	OUT3	OUT2	OUT1	GND_ISO	VDD_24V

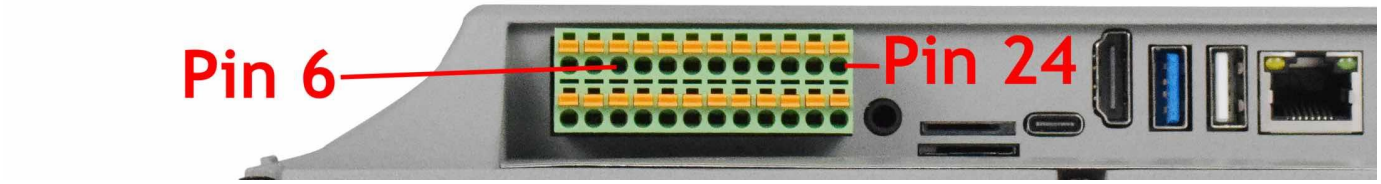

GPIO Terminal

Pin Number	Definition	GPIO	GPIOD Chip	GPIOD Line
Pin 6	IN4	GPIO4_A2	4	2
Pin 8	IN3	GPIO4_A3	4	3
Pin 10	IN2	GPIO4_A5	4	5
Pin 12	IN1	GPIO4_A7	4	7
Pin 14	OUT4	GPIO4_B2	4	10
Pin 16	OUT3	GPIO4_B3	4	11

Pin Number	Definition	GPIO	GPIOD Chip	GPIOD Line
Pin 18	OUT2	GPIO2_A6	2	6
Pin 20	OUT1	GPIO2_A7	2	7
Pin 22	GND_ISO			
Pin 24	VDD_24V			

GPIO Pinout

USB Connectors

There are 2 x **USB HOST** and 1 x **USB DEVICE** (for flashing OS) ports onboard: 1 x USB 2.0 HOST, 1 x USB 3.0 HOST, 1 x USB Type-C, as shown in the figures below.

> **Warning**
>
> **Please unplug USB mouse/keyboard** from the USB3.0 port when flashing OS.

The USB3.0 type-A host and USB-C **can't be used** at the same time. Before boot into OS, USB-C is enabled for installing OS image; after boot into OS, USB-A is enabled but USB-C is disabled.
In Android, these can be configured, USB3.0 type A is enabled by default, but you can switch to using USB-C in the software for debugging; in Linux, these can't be configured.

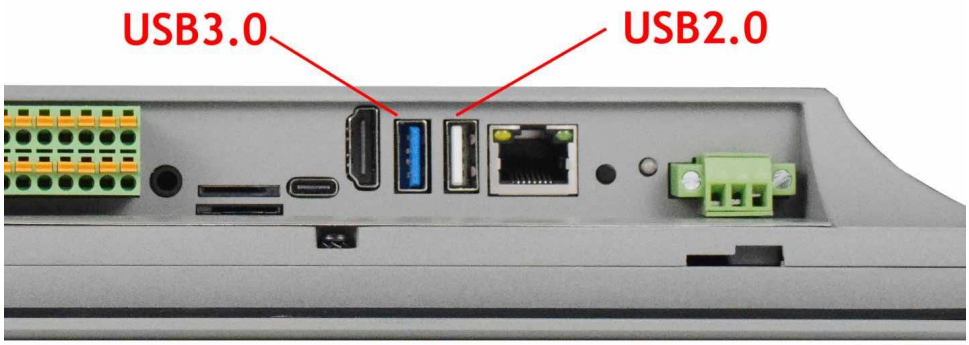

USB HOST Ports

USB Type-C Port

LAN Connector

LAN (RJ45) connector provides 1 x RJ45 Ethernet connectivity over standardized Ethernet cables as shown in the figure below. The integrated Ethernet interface supports up to 1 Gbps data throughput.

This product also supports optional PoE(Power over Ethernet, 802.3af/at), it does not ship with PoE by default, if you need PoE, you can choose PoE in the official Chipsee store or contact us before placing an order.

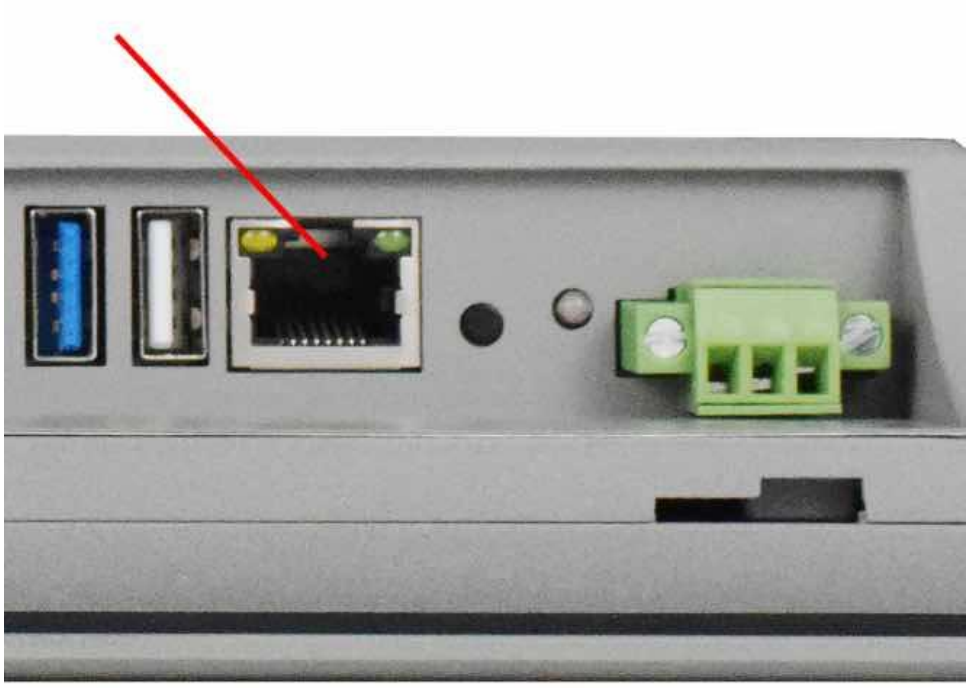

RJ45 LAN Connector

Note

Use CAT5 or better cables to achieve full data throughput over maximum distance defined by the 1000BASE-T standard (100m).

WiFi & BlueTooth Module

The PPC-RK3576-101 Industrial Panel PC is equipped with the popular **Realtek RTL8821CS WiFi/BT module** which supports BT/BLE 2.1/3.0/4.2, as well as 802.11ac/abgn 433Mbps 2.4/5.8 GHz Wireless LAN (WLAN).

RTL8821CS WiFi/BT Module

The PPC-RK3576-101 includes an SMA connector for an external WiFi/BT antenna, as illustrated in the figure below.

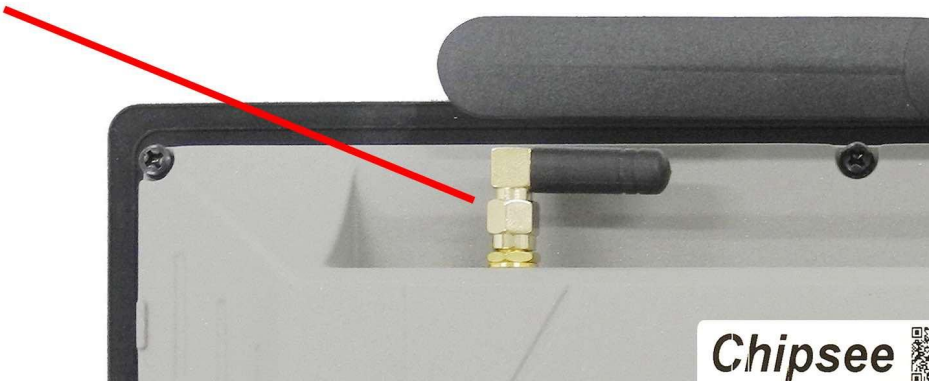

WiFi+BT Antenna SMA

4G/LTE Module

The PPC-RK3576-101 Industrial Panel PC is equipped with a mini-PCIe connector that can connect an optional 4G/LTE module. The customer will also need a SIM Card Holder and a 4G/LTE antenna connector to ensure 4G/LTE works.

SIM card does **NOT** support hot plug. **Power off** before inserting or removing SIM card.

M.2 PCIe and 4G/LTE (mini PCIe) can be used at the same time

mini-PCIe Connector & 4G Module

4G/LTE Antenna

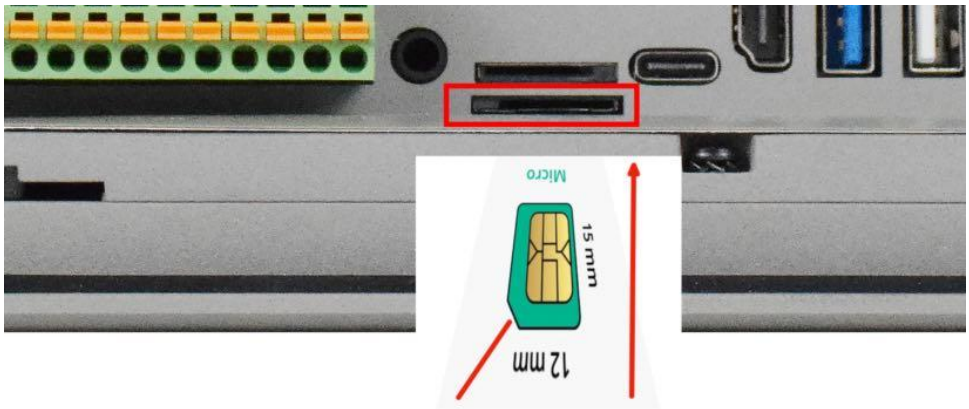

SIM Card Direction

Attention

The product does not come shipped with the 4G/LTE module by default. The customer can choose the 4G/LTE module option when placing an order, we will install all the necessary components.

M.2 Slot

There is an **optional** M.2 slot on the PPC-RK3576-101 that allows an optional SSD. The M.2 slot is capable of holding a M.2 M-Key 2230/2242/2260/2280 (PCI-E 3.0 x1) module. M.2 PCIe and 4G/LTE (mini PCIe) can be used at the same time.

The PPC-RK3576-101 does not come shipped with an SSD nor an M.2 slot by default. If you need the M.2 slot or M.2 devices please contact us before placing an order.

M.2 Slot (PCIe 3.0 x1)

TF Card Slot

The PPC-RK3576-101 Industrial Panel PC features 1 x **TF Card (micro SD) slot**. TF Card can address up to 128GB of storage.

TF (micro SD) Card Slot

Note

The product does not come shipped with the TF Card by default.

Audio Connectors

The PPC-RK3576-101 Industrial Panel PC features some audio peripherals. It has a **3.5mm audio input/output jack**, an **internal speaker**, as well as a small **buzzer**.

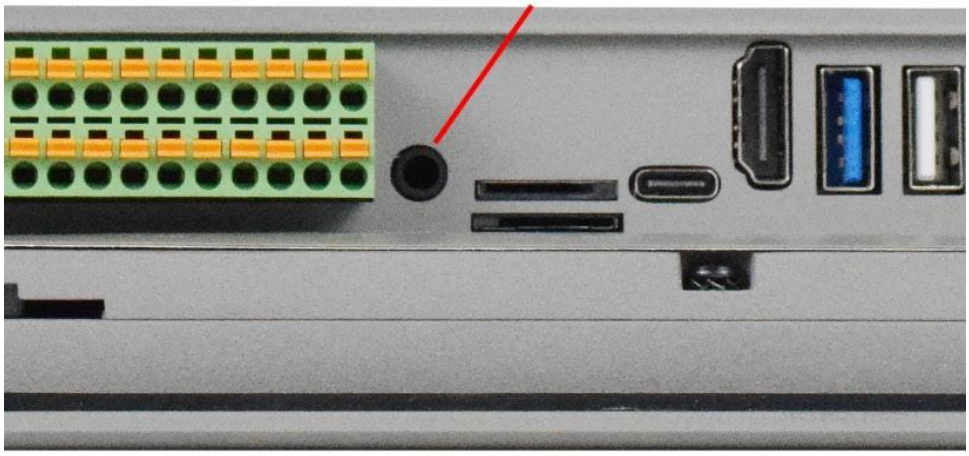

Audio Jack

The miniature 2W embedded speaker is handy for audio reproduction, the small buzzer can play alarm/notification sounds.

2W Micro Speaker and Buzzer

Attention

By plugging in the headphone cable, the internal speaker will be disabled automatically.

HDMI Connector

The PPC-RK3576-101 Industrial Panel PC is equipped with 1 x HDMI OUT port. The HDMI connector allows connecting an additional (external) monitor. HDMI output resolution can be configured by the software.

HDMI Connector

PROG Button

The PPC-RK3576-101 Industrial Panel PC has one button on the board marked as PROG, as shown in the figure below.

When the button is pressed before powering up, the PPC-RK3576-101 will enter LOADER mode. In this mode you can use a USB Type-C cable to upgrade its operating system. You can use this feature to flash another OS to the internal eMMC.

When the button is not pressed before and during power up, the PPC-RK3576-101 will boot normally.

There is no need to press the button during regular operation. However, if you need to flash the OS in MASKROM mode, the button will be used. Please refer to the software documents for more information.

PROG Button

Mounting Procedure

You can mount PPC-RK3576-101 with VESA mounting (guide): **75 x 75** mm, 4 x **M4** (6mm) screws.

You can mount PPC-RK3576-101 with PANEL mounting (guide).

> **Attention**
>
> Please make sure the display is not exposed to high pressure when mounting into an enclosure.

Mechanical Specifications

For PPC-RK3576-101, the outer mechanical dimensions are 275.5 x 193.5 x 46.0mm (W x L x H).

The cutout dimensions of this 10.1 inch product is 258mm x 176mm.

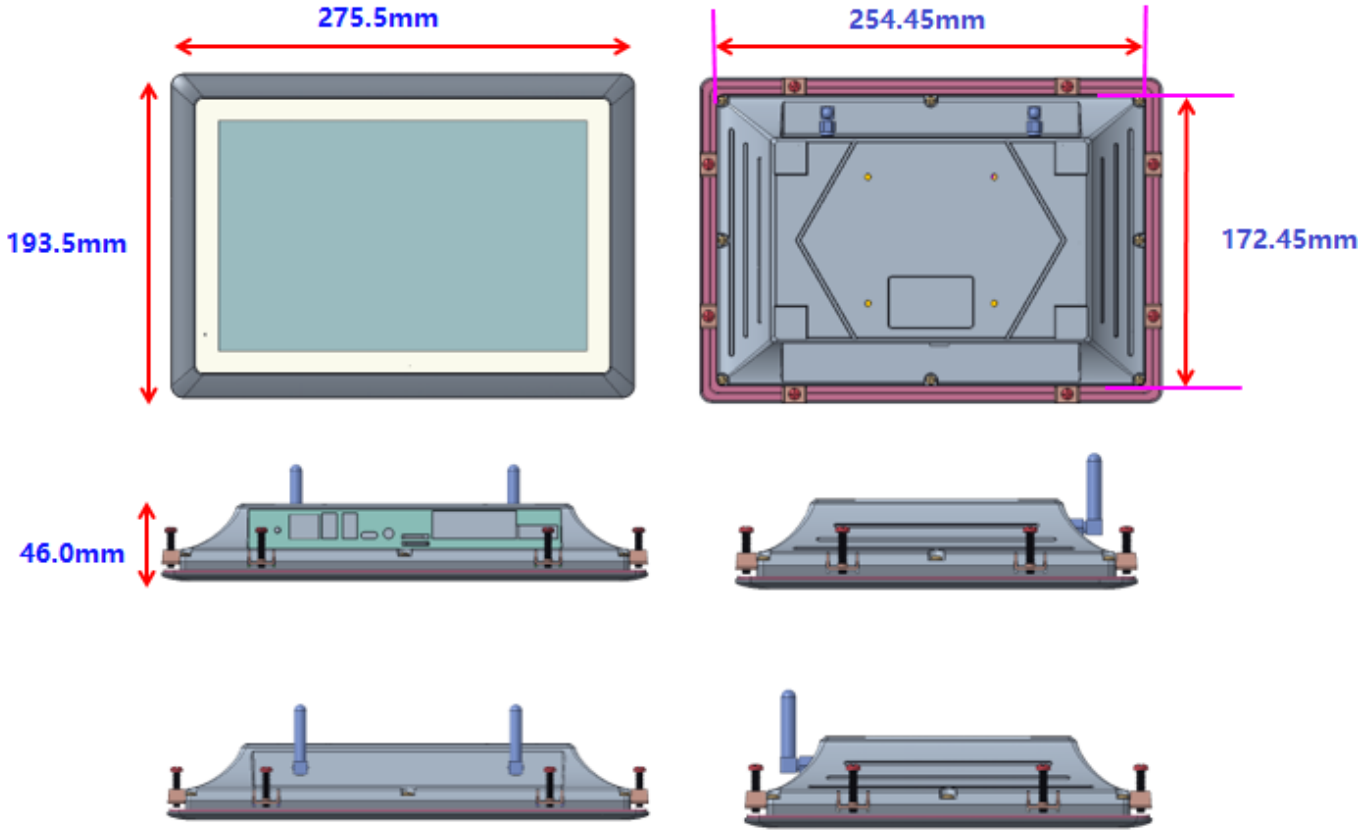

Panel mounting (PPC-RK3576-101)

Disclaimer

This document is provided strictly for informational purposes. Its contents are subject to change without notice. Chipsee assumes no responsibility for any errors that may occur in this document. Furthermore, Chipsee reserves the right to alter the hardware, software, and/or specifications set forth herein at any time without prior notice and undertakes no obligation to update the information contained in this document.

While every effort has been made to ensure the accuracy of the information contained herein, this document is not guaranteed to be error-free. Further, it does not offer any warranties or conditions, whether expressed orally or implied in law, including implied warranties and conditions of merchantability or fitness for a particular purpose. We specifically disclaim any liability with respect to this document, and no contractual obligations are formed either directly or indirectly by this document.

Despite our best efforts to maintain the accuracy of the information in this document, we assume no responsibility for errors or omissions, nor for damages resulting from the use of the information herein. Please note that Chipsee products are not authorized for use as critical components in life support devices or systems.

Technical Support

If you encounter any difficulties or have questions related to this document, we encourage you to refer to our other documentation for potential solutions. If you cannot find the solution you're looking for, feel free to contact us. Please email Chipsee Technical Support at **support@chipsee.com**, providing all relevant information. We value your queries and suggestions and are committed to providing you with the assistance you require.